MILL-MAX MFG. CORP.

190 Pine Hollow Road
Oyster Bay, NY 11771
www.mill-max.com

Mill-Max Mfg. Corp. is a vertically integrated engineering and manufacturing company capable of producing over 100 million interconnect components a week, making us the largest manufacturer of precision-machined interconnect components in North America.

Established in 1971 by Roger Bahnik, Chairman and CEO, Mill-Max has a tradition of exercising total control from raw materials to finished product. Our 150,000 square foot plant, located in Oyster Bay, NY, houses all facilities including: engineering, customer service, sales & marketing, tooling, primary and secondary machining, stamping, gold and tin plating, injection molding, automatic assembly operations and strict process control, monitored by our experienced Quality Control Inspectors.

Mill-Max is particularly distinguished by its use of proprietary high speed turning machines. On our factory floor, hundreds of automated machines turn copper alloy rod and wire at high speed as cutting tools shape each pin. This method enables us to hold tolerances down to +/- 0,13mm. High-speed turning machines have the flexibility to be easily and quickly re-configured to make pins in different sizes and shapes. This makes the task of producing custom products simple.

In this Design Guide, you will find a wide variety of interconnect components. Our product line includes precision-machined spring-loaded connectors, SIP, DIP, PGA, BGA, and PLCC sockets, board-to-board interconnects and pin headers, PCB pins, receptacles and solder terminals, all available in SMT and through-hole. Cannot find what you need? Remember, Mill-Max specializes in application specific products. Contact one of our technical services engineers to discuss your specific requirements.

Mill-Max products are found in such diversified markets as:

- Automotive
- Backplanes
- Broadcasting Equipment
- Bar Code Scanners
- Cable Television
- Cellular Phones
- Computers
- Connectors
- DC/DC Converters
- Fiber Optics
- Industrial Controls
- Instrumentation
- Medical Cables
- Networking Systems
- Pagers
- Power Supplies
- Scanners
- Smoke Detectors
- Test Equipment
- Telecommunications

From order entry to shipping product, Mill-Max is focused on the total satisfaction of our customers. Through our sales representative organizations, Mill-Max products are sold directly, as well as through a network of 26 authorized distributors located throughout the United States and in various locations worldwide. It's this commitment to excellence that truly makes Mill-Max your source for Maximum Interconnect Solutions.

NOTE
- All dimensions in this design guide are in inches unless otherwise stated.

- In the interest of improved design and performance, Mill-Max reserves the right to make changes in its specifications without prior notice.
- Orders subject to terms and conditions @ www.mill-max.com

Spring-Loaded Connectors — PAGES 6 - 17

- Surface Mount, Single & Double Row Strips — Pages 6 - 9
- Through Hole, Single & Double Row Strips — Pages 10 - 12
- Target Connectors for Spring-Loaded Assemblies — Pages 13 - 14
- Discrete Spring-Loaded Contacts — Pages 15 - 17

DIP Sockets, Carriers & Headers — PAGES 18 - 64

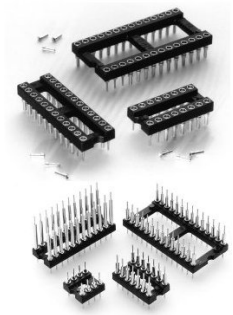

- Quick Selector Chart — Page 18
- DIP Insulators — Pages 19 - 21
- DIP Sockets and Carriers — Pages 22 - 47
- Mil-S-83734 Approved — Pages 32 - 35
- DIP Headers — Pages 48 - 56
- Shrink DIP Sockets and Headers — Pages 57 - 60
- Right Angle Display Sockets — Pages 61 - 62
- Relay Sockets and Zig-Zag Sockets — Pages 63 - 64

SIP Interconnects, Sockets, Carriers & Headers — PAGES 65 - 111

- Quick Selector Chart — Page 65
- 1,27 Grid Interconnects — Pages 66 - 69
- 2mm Grid Interconnects — Pages 70 - 72
- 2,54 Grid Interconnects — Pages 73 - 87
- 5,08 Grid Interconnects — Pages 88
- 2,54 Grid SIP Sockets — Pages 89 - 101
- 2,54 Grid SIP Headers — Pages 102 - 111

PGA, BGA, PLCC, Sockets & Headers — PAGES 112 - 120

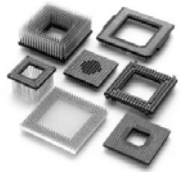

- PGA Sockets and Headers — Pages 112 - 116
- BGA Adapter Systems — Page 117
- PLCC Sockets — Pages 118 - 120

USB, Test Point, TO Sockets and Jumpers — PAGES 121 - 125

- USB Sockets — Pages 121 - 122
- TO Sockets — Page 123
- Test Point Sockets — Page 124
- Jumpers — Page 125

PIN RECEPTACLES

PAGES 126 - 165

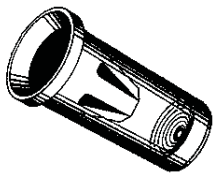

Pin receptacles are individual component lead sockets primarily used for the plugging and unplugging of components on pc boards. Pin receptacles are made by press-fitting a pre-tooled “multi-finger” contact into a precision-machined shell. These receptacles will accept round pins ranging in diameter from 0,20mm to 2,59mm as well as square & rectangular component leads.

WRAPOST RECEPTACLES

PAGES 166 - 169

Wrapost receptacles are individual component lead sockets with 0,64mm or 1,14mm square pin termination for wire wrapped interconnection. Wrapost receptacles will accept round pins ranging in diameter from 0,38mm to 1,19mm as well as square & rectangular component leads.

PRINTED CIRCUIT PINS

PAGES 170 - 191

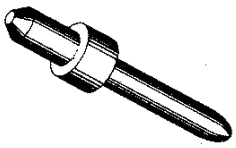

Printed circuit pins are machined, individual pins used for various plug-in applications and board to board interconnection. They are commonly fastened to pc boards by being press-fit, swaged (riveted) or soldered.

WRAPOST TERMINALS

PAGES 192 - 195

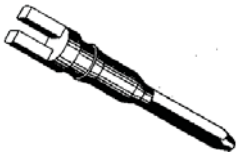

Wrapost terminals are individual pins with 0,64mm or 1,14mm square termination for wire wrapped interconnection. They are commonly fastened to pc boards by being press-fit, swaged (riveted) or soldered.

SOLDER TERMINALS

PAGES 196 - 212

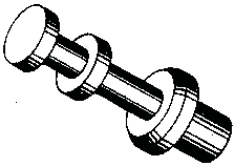

Solder terminals are machined terminals used primarily for attaching wires to circuit boards. Turret, slotted and pin types are available. They are commonly swaged (riveted) and soldered to pc boards.

GENERAL CONTACT INFORMATION / DATA PAGES 214 - 226

MATERIALS USED BY MILL-MAX PAGE 227

TERMS, DEFINITIONS AND INDEX PAGES 228 - 236

Pins & Receptacles:

Pins and receptacle shells are manufactured by precision high speed turning machines. The base materials for these components are copper alloys.

Receptacles are a two piece construction consisting of a plated contact press-fit into a plated shell. The contacts are stamped from beryllium copper strip.

Materials:

Pins & Receptacle Shells:
Brass Alloy 360 UNS C36000 ASTM-B16 (Up to a 6,35mm diameter)
Phosphor Bronze alloy 544 UNS C54400 ASTM-B139 (Up to a 1,83mm diameter)
Tellurium Copper alloy 145 UNS C14500 ASTM-B301 (Up to a 3,96mm diameter)

See page 126 for a complete list of standard available stock diameters.
(For the availability of larger diameter materials contact Technical Services).

Contacts:
Beryllium copper UNS C17200 ASTM-B194 (For most applications)
Beryllium Nickel UNS N03360 (For high temperature applications)

(For individual contact specifications see pages 216-226)
The materials listed above are all RoHS compliant.

Dimensional, Mechanical & Environmental Data:

Standard tolerances for pins and receptacle shells are:
Diameters: +/- 0,051mm
Lengths: +/- 0,13mm
Angles: +/- 2°

Mechanical Life (Durability): Mill-Max receptacles are capable of 1000 minimum insertion/extraction cycles for a broad range of applications. Mating pin size, shape and finish along with application specific variables will affect the life of a contact.

Contact Forces: See individual contact specifications on pages 216-226.

Environmental Data:
- Operating temperature range: -55/+125° C
- Vibration (No electrical discontinuity Greater than 1 µs): 10-2000 HZ, 15 G
- Shock (No electrical discontinuity Greater than 1 µs): 50 G

Electrical data is dependent on the contact used in the receptacle. See page 214 for free air current ratings of the contacts.

Platings:

GOLD per ASTM B 488 & MIL-G-45204, Type 1, Code C
SILVER per ASTM B 700, Grade B, Class S
TIN per ASTM B 545, Type 1
TIN/LEAD (93/7) per ASTM B 545
ELECTRO-SOLDER (60/40) per ASTM B 579, Bright
NICKEL per SAE-AMS-QQ-N-290
ELECTROLESS NICKEL per MIL-C-26074
COPPER per SAE-AMS-2418

Connectors:

Connectors are headers, sockets and interconnects. They consist of pins, receptacles or spring pins assembled into thermoplastics or FR-4 epoxy laminate insulator bodies. They are available in DIP, SIP, strip and PGA packages in grids of 1,27mm, 1,78mm, 2mm, 2,54mm and 2,54mm interstitial for PGA's.

Electrical Data:

SERIES:	100-700	800	830	850
- Rated current (Amps):	1	3	3	1
- Rated voltage:	100 VRMS/150 VDC			
- Contact resistance:	10 mΩ max.			
- Insulation resistance:	10,000 MΩ min.			
- Dielectric strength:	1000 VRMS min.			
(700 VRMS min. for series 117 Shrink DIP)				
- Air and creepage distance (mm):	0,71	0,84/0,71	0,51	0,41/0,51
(.012 for series 117 Shrink DIP)				
- Capacitance(pF max):	.8	1	1	1

Electrical data above does not apply to BGA, PLCC, USB or Spring-Loaded connectors. Electrical data for these products can be found on the following pages: BGA – Page 113; PLCC - Page 113; USB - Pages 121 & 122; Spring-Loaded connectors – Pages 6 - 12.

Operating temperature range: -55/+125° C

General tolerances for assembled connector products:
- Lengths: +/- 0,25mm (See Note Below)
- Connector Flatness: 0,13mm (up to 25,4mm in length)
- Co-planarity of SMT Connectors: 0,13mm (up to 25,4mm in length)
- For connectors exceeding 25,4mm in length the flatness/co-planarity may exceed 0,13mm. Please contact Technical Services for more information.

(Note: Specifications and tolerances are provided wherever possible. Due to the wide variety of connectors Mill-Max offers, the specific tolerances vary from product to product. If you need information regarding the tolerance of a particular part, please contact technical services.)

Materials:

Insulator Bodies:

Standard material is glass filled thermoplastic polyester (PCT), self extinguishing, rated UL 94 V-0.

Some surface mount, pin grid array and spring pin connector insulators are molded from high temperature Nylon 46, rated UL 94 V-0.

FR-4 Epoxy laminate is a thermoset material used in custom insulators and high temperature applications. It is especially useful because of its low Temperature Coefficient of Expansion (TCE). See chart below:

TCE for molded insulator	30 ppm/° C
TCE for 4-Layer PCB	13 ppm/° C
TCE for unclad epoxy	12 ppm/° C

The above insulator materials are all suitable for lead free soldering processes up to 260° C.

For complete material properties of plastics used by Mill-Max see page 227.

For inquiries regarding other insulator materials, please contact Technical Services.

Spring Pins:

Spring pins consist of precision-machined brass compo nents assembled together with beryllium copper or stainless steel springs. External components and internal springs are gold plated. Spring pins are designed to be used at mid-stroke. Over compression can cause damage restricting the movement of the plunger.

Materials:

External Components (Body, Piston, Base, Tail):
Brass Alloy 360 UNS C36000 ASTM-B16

Springs:

Beryllium copper UNS C17200 ASTM-B197
Stainless Steel 302

Dimensional, Mechanical & Environmental Data:

Standard tolerances for spring pins at initial height:
Diameters: +/- 0,051mm
Lengths: +/- 0,15mm

Mechanical life (Durability): 1,000,000 cycles minimum
Force tolerance: +/- 20 g (See individual spring pin data on pages 6- 17 for forces)
Stroke tolerance: +/- 0,13mm

Environmental Data:

- Operating temperature range: -55/+125° C
- Vibration (No electrical discontinuity Greater than 1 µs): 0-200 HZ, 10G
- Shock (No electrical discontinuity Greater than 1 µs): 50 g

For complete material properties of metals, platings and plastics used by Mill-Max see page 227.

Where applicable, Mill-Max products and procedures are designed to meet the following standards:

MIL-STD 1916	-	DOD preferred methods for acceptance of product
MIL-STD 202G	-	Test methods for electronic and electrical component parts
MIL-STD 45662	-	Calibration system requirements, or ISO 10012
MIL-F-14072	-	Finishes for ground based electronic equipment
MIL-I-45208	-	Inspection system requirements, or equivalent
MIL-S-83505	-	General specification for sockets (lead, electronic components)
MIL-S-83734	-	General specification for DIP sockets

In the interest of improved design, quality and performance, Mill-Max reserves the right to make changes in its specifications without prior notice.

SPRING-LOADED CONNECTORS

Mill-Max Spring-Loaded Connectors are ideal for a wide range of applications, from portable data acquisition units and mobile communication to medical and military equipment applications. Their unique design can be the perfect answer for many situations, establishing electrical continuity on virtually any surface including problematic vibratory environments. Unlike the fixed mating height created by pins and receptacles, spring-loaded connectors are able to compensate for floating heights and uneven mating surfaces, thus maintaining a reliable electrical connection.

When strategically placed within an assembly and utilized correctly (shielded from over compression and direct side load forces,) miniature spring-loaded connectors can provide a reliable connection up to a million cycles.

Some typical applications include:

- The internal battery connection in portable instruments, or as the external battery connection for charging these instruments (docking stations.)
- As a method for stacking printed circuit boards in an assembly. Utilizing spring pin connectors is a convenient approach to creating mezzanine-tiered board modules that can be assembled and disassembled quickly.
- Blind-mating applications. The spring pin piston need only make contact with its mating surface. This is typically a land or pad that is larger than the plunger diameter. Compare this to a pin and socket connection where alignment must be more precise for the pin to enter the socket.

Mill-Max Spring-Loaded Connectors can mate to the following surfaces:

- A conductive input/output pad found on the instrument pack itself.
- A gold-plated land on a circuit board. A hard gold over nickel plated surface is recommended for the mating surface. This is the same as would be used for the printed circuit fingers associated with card edge connectors.
- Individual Mill-Max gold-plated nail head pins which can be soldered to the mating circuit board to serve as targets.
- Mill-Max Target Connectors which provide a large 1,78mm flat, gold-plated circuit path to the board.

SPRING-LOADED CONNECTORS
Surface Mount, Low Profile
Single and Double Row Strips

- Modular contacts for use on 2,54 grid, available in five heights from 3,48 to 5,99, supplied in single and double row contact strips.
- Precision-machined piston / base and gold plated components assure a 1,000,000 min. cycle life.
- Pistons have a long stroke relative to the low profile of the assembly.
- Low resistance, high current contacts are rated at 2 amps continuous, 3 amps peak.
- High temperature thermoplastic insulators are suitable for surface mount processes.
- Both 811 & 813 series, contact styles 1 thru 4, are available on 32mm wide carrier tape for pick and place assembly per EIA-481. See page 9 for strip lengths available and ordering information.

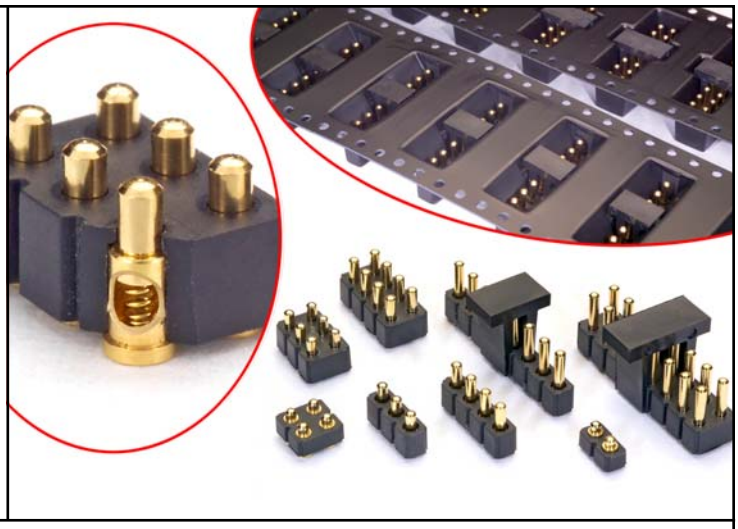

SINGLE ROW Series 811

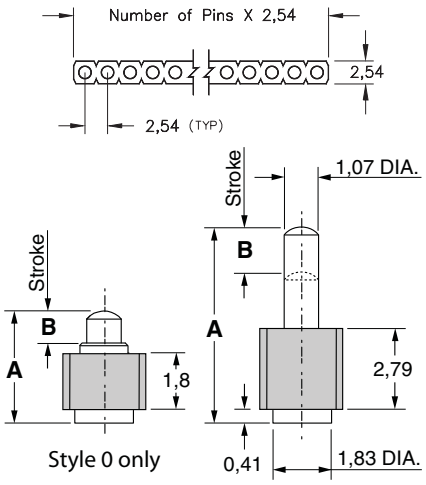

DOUBLE ROW Series 813

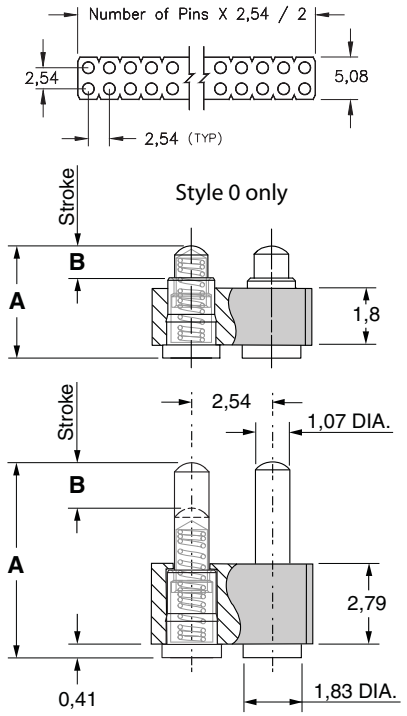

Ordering Information

Single Row Series 811

811-22-0XX-30-00X-101

Specify contact style 0-4

Specify # of contacts → 01-64

Double Row Series 813

813-22-0XX-30-00X-101

Specify contact style 0-4

Specify # of contacts → 04-72

For 811 & 813 Tape & Reel packaging See page 9

CONTACT STYLE	INITIAL HEIGHT A	MAX. STROKE B
0	3,48	0,99
1	4,50	1,14
2	5,0	1,39
3	5,51	1,39
4	5,99	1,39

Technical Specifications

Materials:

Contact piston & Base: Machined copper alloy plated 0,51µm gold over 2,54µm nickel
Spring: Beryllium copper plated 0,25µm gold
Insulator: High temp. thermoplastic, rated UL94 V-0

Mechanical:

Spring force @ initial height (A): 25 grams
Spring force @ mid stroke (B/2): 60 grams
Durability: 1,000,000 cycles min.
Coplanarity: 0,13 (Single Row up to 10 pins; Double Row up to 20 pins) For higher pin counts contact Tech Support.

Electrical:

Voltage rating: 100Vrms/150Vdc
Current rating: 2A (continous), 3A (peak) per contact
Contact resistance: 20mΩ max.
Insulation resistance: 10,000MΩ min.
Dielectric strength: 700Vrms min.
Capacitance: 1pF max.

RoHS 2002/95/EC

SPRING-LOADED CONNECTORS
Surface Mount, High Profile
Single and Double Row Strips

- Modular contacts for use on 2,54 grid, available in ten heights from 6,48 to 10,9, supplied in single and double row contact strips.
- Precision-machined piston / base and gold plated components assure a 1,000,000 min. cycle life.
- Pistons have a long stroke relative to the low profile of the assembly.
- Low resistance, high current contacts are rated at 2 amps continuous, 3 amps peak.
- High temperature thermoplastic insulators are suitable for surface mount processes.
- Both 812 & 814 series are available on 32mm or 44mm wide carrier tape for automated pick and place assembly per EIA-481. See page 9 for strip lengths available and ordering information.

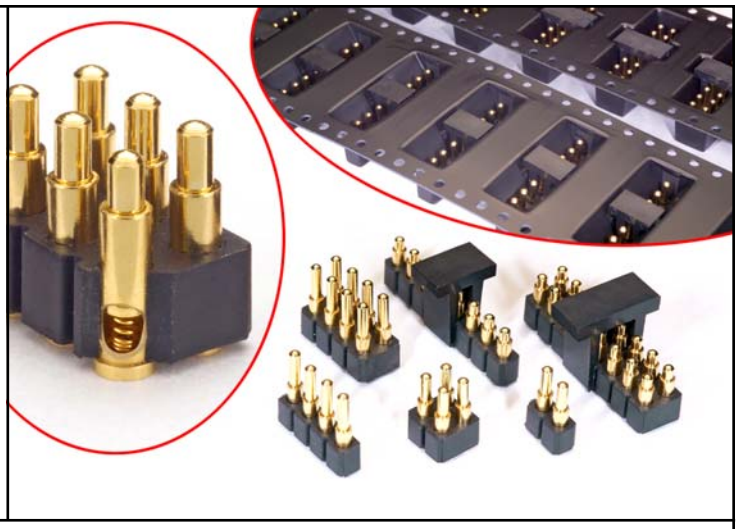

SINGLE ROW Series 812

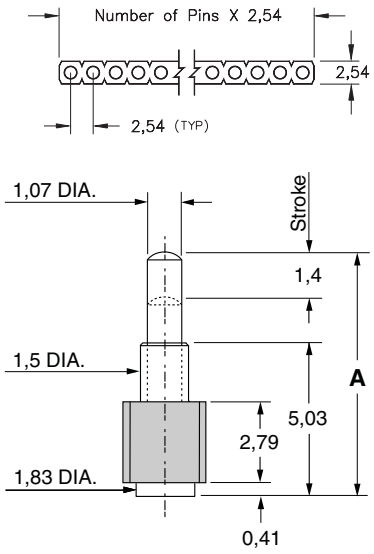

DOUBLE ROW Series 814

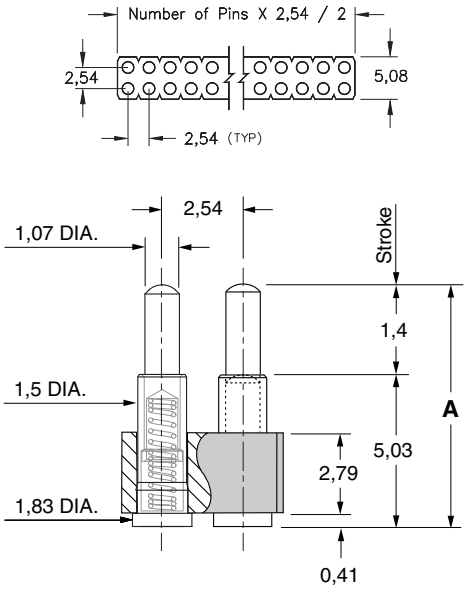

Ordering Information

Single Row Series 812

812-22-0XX-30-00X-101

Specify contact style 0-9

Specify # of contacts → 02-64

Double Row Series 814

814-22-0XX-30-00X-101

Specify contact style 0-9

Specify # of contacts → 04-72

For 812 & 814 Tape & Reel packaging See page 9

CONTACT STYLE	INITIAL HEIGHT A	CONTACT STYLE	INITIAL HEIGHT A
0	6,48	**5**	8,89
1	6,99	**6**	9,4
2	7,49	**7**	9,91
3	8,0	**8**	10,4
4	8,51	**9**	10,9

Technical Specifications

Materials:

Contact piston & Base: Machined copper alloy plated 0,51µm gold over 2,54µm nickel
Spring: Beryllium copper plated 0,25µm gold
Insulator: High temp. thermoplastic rated UL94 V-0

Mechanical:

Spring force @ initial height (A): 25 grams
Spring force @ mid stroke (0,7mm): 60 grams
Durability: 1,000,000 cycles min.
Coplanarity: 0,13 (Single Row up to 10 pins; Double Row up to 20 pins) For higher pin counts contact Tech Support.

Electrical:

Voltage rating: 100Vrms/150Vdc
Current rating: 2A (continous), 3A (peak) per contact
Contact resistance: 20mΩ max.
Insulation resistance: 10,000MΩ min.
Dielectric strength: 700Vrms min.
Capacitance: 1pF max.

RoHS 2002/95/EC

SPRING-LOADED CONNECTORS
Surface Mount, High Profile
Single and Double Row Strips

- Modular contacts for use on 2,54 grid, available in a height of 7,32, supplied in single and double row contact strips.
- Precision-machined piston / base and gold plated components assure a 1,000,000 min. cycle life.
- Pistons have a 1,14 mid. stroke and a 2,29 max. stroke.
- Low resistance, high current contacts are rated at 2 amps continuous, 3 amps peak.
- High temperature thermoplastic insulators are suitable for surface mount processes.
- 819 & 820 series contact strips are designed for placement onto a Ø 2,08mm solder pad prior to reflow soldering.

SINGLE ROW Series 819

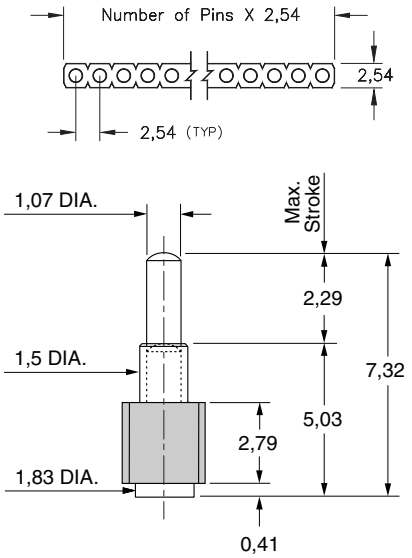

DOUBLE ROW Series 820

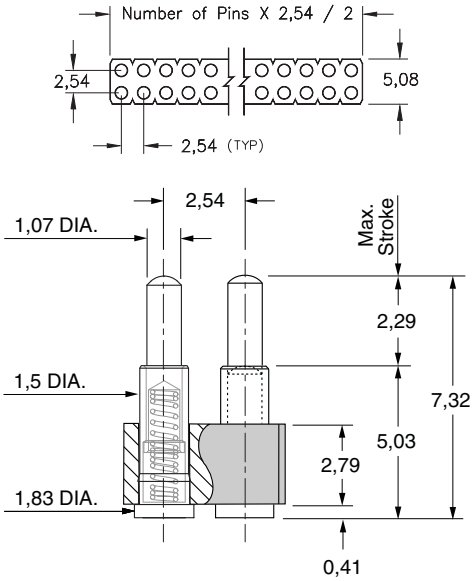

Ordering Information

Fig. 1	**Single Row Series 819** 819-22-0XX-30-001101 **Specify # of contacts** → 01-64
Fig. 2	**Double Row Series 820** 820-22-0XX-30-001101 **Specify # of contacts** → 04-72

Technical Specifications

Materials:

Contact piston & Base: Machined copper alloy plated 0,51µm gold over 0,25µm nickel
Spring: Beryllium copper plated 0,25µm gold
Insulator: High temp. thermoplastic rated UL94 V-0

Mechanical:

Spring force @ initial height : 25 grams
Spring force @ mid stroke : 60 grams
Durability: 1,000,000 cycles min.

Electrical:

Voltage rating: 100Vrms/150Vdc
Current rating: 2A (continous), 3A (peak) per contact
Contact resistance: 20mΩ max.
Insulation resistance: 10,000MΩ min.
Dielectric strength: 700Vrms min.
Capacitance: 1pF max.

RoHS 2002/95/EC

SPRING-LOADED CONNECTORS
Surface Mount, Horizontal Mount
Single Row Strips

- Modular contacts for use on 2,54 grid, supplied in single row contact strips. Piston action is parallel to the board surface.
- Precision-machined piston / base and gold plated components assure a 1,000,000 min. cycle life.
- Pistons have a 1,14 mid. stroke & 2,29 max. stroke.
- Low resistance, high current contacts are rated at 2 amps continuous, 3 amps peak.
- High temperature thermoplastic insulators are suitable for surface mount processes.
- 810 series contact strips are designed for manual placement onto solder pads.

Single Row Series 810

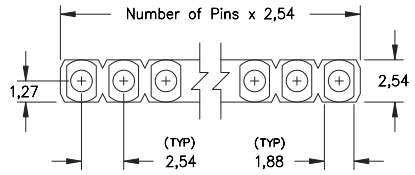

TOP VIEW

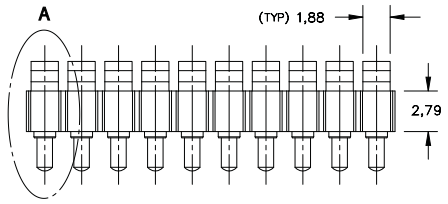

FRONT VIEW

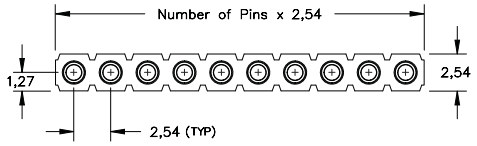

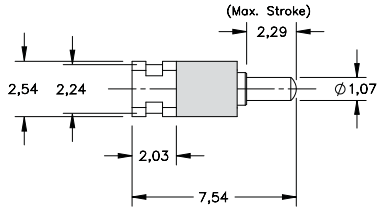

DETAIL 'A'

Suggested P.C.B. FOOTPRINT

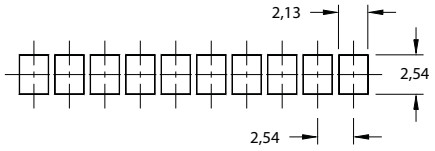

Coplanarity 0,13. For Pin Counts >10 positions consult Technical Support.

Ordering Information

Series 810 **Single Row Surface Mount**

810-22-0_ _-40-001101

Specify # of pins → 01-10

For Electrical, Mechanical & Enviromental Data, See pg. 4.1

For RoHS compliance select ◇ plating code.

Technical Specifications

Materials:

Contact piston & Base: Machined copper alloy plated 0,51µm gold over 2,54µm nickel.
Spring: Beryllium copper plated 0,25µm gold
Insulator: High temp. thermoplastic rated UL94 V-0

Mechanical:

Spring force @ initial height: 25 grams
Spring force @ mid stroke: 60 grams
Durability: 1,000,000 cycles min.

Electrical:

Voltage rating: 100Vrms/150Vdc
Current rating: 2A (continous), 3A (peak) per contact
Contact resistance: 20mΩ max.
Insulation resistance: 10,000MΩ min.
Dielectric strength: 700Vrms min.
Capacitance: 1pF max.

RoHS 2002/95/EC

- Modular contacts for use on 2,54 grid, available in ten heights from 6,48 to 10,92, supplied in single and double row contact strips.
- Precision-machined piston / base and gold plated components assure a 1,000,000 min. cycle life.
- Pistons have a 0,69 mid stroke & 1,4 max stroke.
- Low resistance, high current contacts are rated at 2 amps continuous, 3 amps peak.
- High temperature thermoplastic insulators are suitable for surface mount processes.
- 812 & 814 series contact strips are designed for manual placement into Ø 0,58±0,08 plated-thru-holes in the circuit board prior to intrusive reflow soldering.

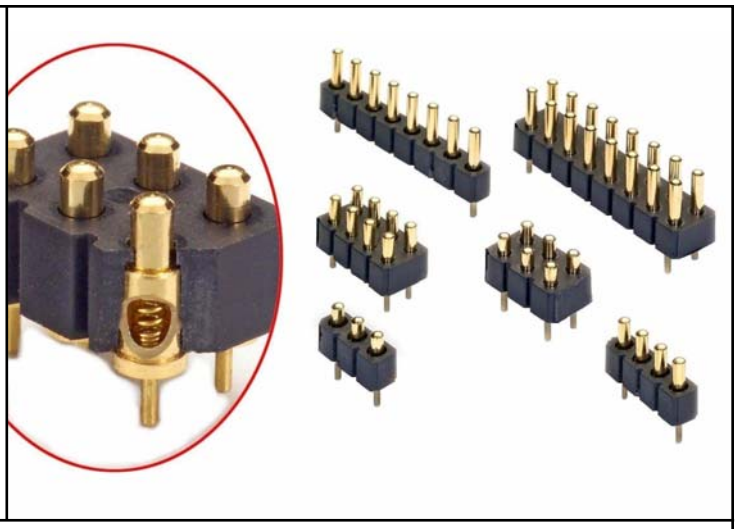

Single Row Series 812...01X101

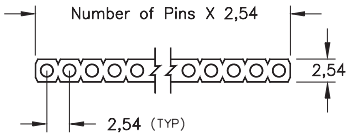

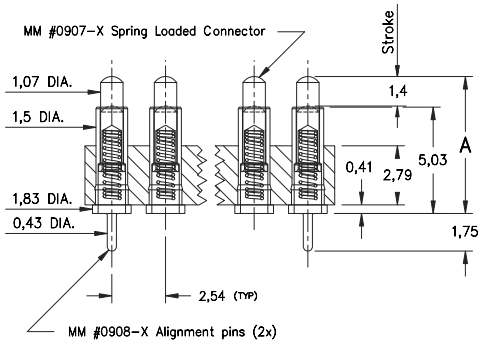

Double Row Series 814...01X101

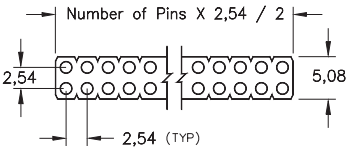

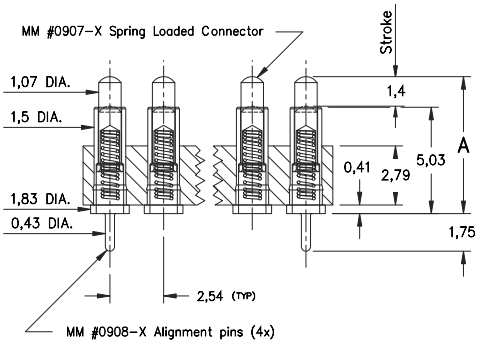

Ordering Information

Single Row Series 812...01X101

812-22-0XX-30-01X-101

Specify contact style 0-9

Specify # of contacts → 03-64

Double Row Series 814...01X101

814-22-0XX-30-01X-101

Specify contact style 0-9

Specify # of contacts → 06-72

CONTACT STYLE	INITIAL HEIGHT A	CONTACT STYLE	INITIAL HEIGHT A
0	6,48	**5**	8,89
1	6,99	**6**	9,4
2	7,49	**7**	9,91
3	8,0	**8**	10,41
4	8,51	**9**	10,92

Technical Specifications

Materials:

Contact piston & Base: Machined copper alloy plated 0,51µm gold over 2,54µm nickel
Spring: Beryllium copper plated 0,25µm gold
Insulator: High temp. thermoplastic rated UL94 V-0

Mechanical:

Spring force @ initial height (A): 25 grams
Spring force @ mid stroke (B/2): 60 grams
Durability: 1,000,000 cycles min.

Electrical:

Voltage rating: 100Vrms/150Vdc
Current rating: 2A (continous), 3A (peak) per contact
Contact resistance: 20mΩ max.
Insulation resistance: 10,000MΩ min.
Dielectric strength: 700Vrms min.
Capacitance: 1pF max.

RoHS 2002/95/EC

Ordering Information for Series 811/812/813/814 in Carrier Tape

Single Row Series 811

811-22-0XX-30-00X-191

Specify contact style 0-4

Specify # of contacts 02 - 08

(32mm wide tape, 400 parts per 330mm reel)

Double Row Series 813

813-22-0XX-30-00X-191

Specify contact style 0-4

Specify # of contacts 04 - 16

(32mm wide tape, 400 parts per 330mm reel)

Single Row Series 811

811-22-0XX-30-00X-191

Specify contact style 1-4

Specify # of contacts 09 - 12

(44mm wide tape, 200 parts per 330mm reel)

Double Row Series 813

813-22-0XX-30-00X-191

Specify contact style 1-4

Specify # of contacts 18 - 24

(44mm wide tape, 200 parts per 330mm reel)

Single Row Series 812

812-22-0XX-30-00X-191

Specify contact style 0-2

Specify # of contacts 02 - 08

(32mm wide tape, 400 parts per 330mm reel)

Double Row Series 814

814-22-0XX-30-00X-191

Specify contact style 0-2

Specify # of contacts 04 - 16

(32mm wide tape, 400 parts per 330mm reel)

Single Row Series 812

812-22-0XX-30-00X-191

Specify contact style 0-2

Specify # of contacts 09 - 12

(44mm wide tape, 200 parts per 330mm reel)

Double Row Series 814

814-22-0XX-30-00X-191

Specify contact style 0-2

Specify # of contacts 18 - 24

(44mm wide tape, 200 parts per 330mm reel)

Single Row Series 812

812-22-0XX-30-00X-191

Specify contact style 3-9

Specify # of contacts 02 - 12

(44mm wide tape, 200 parts per 330mm reel)

Double Row Series 814

814-22-0XX-30-00X-191

Specify contact style 3-9

Specify # of contacts 04 - 24

(44mm wide tape, 200 parts per 330mm reel)

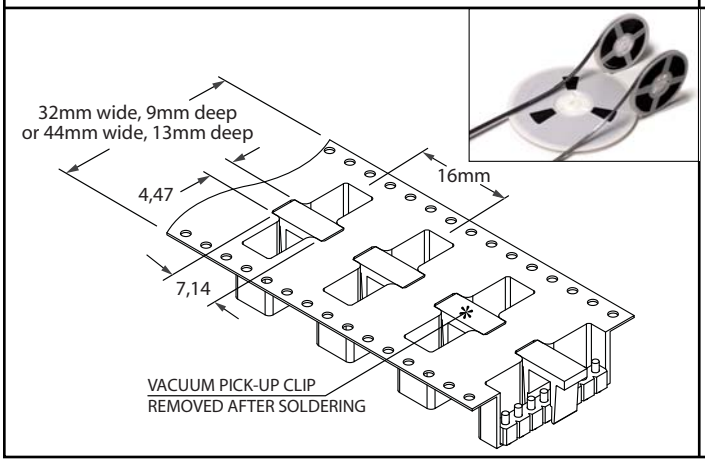

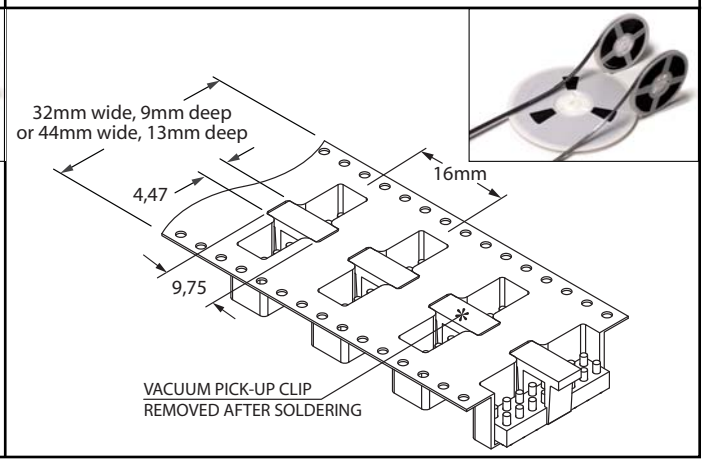

- Modular contacts for use on 2,54 grid, available in five heights from 3,48 to 5,99, supplied in single and double row contact strips.
- Precision-machined piston / base and gold plated components assure a 1,000,000 min. cycle life.
- Pistons have a long stroke relative to the low profile of the assembly.
- Low resistance, high current contacts are rated at 2 amps continuous, 3 amps peak.
- High temperature thermoplastic insulators are suitable for surface mount processes.
- 821 & 823 series contact strips are designed for manual placement into Ø0,56±0,08 plated-thru-holes in the circuit board prior to hand, wave or reflow soldering.

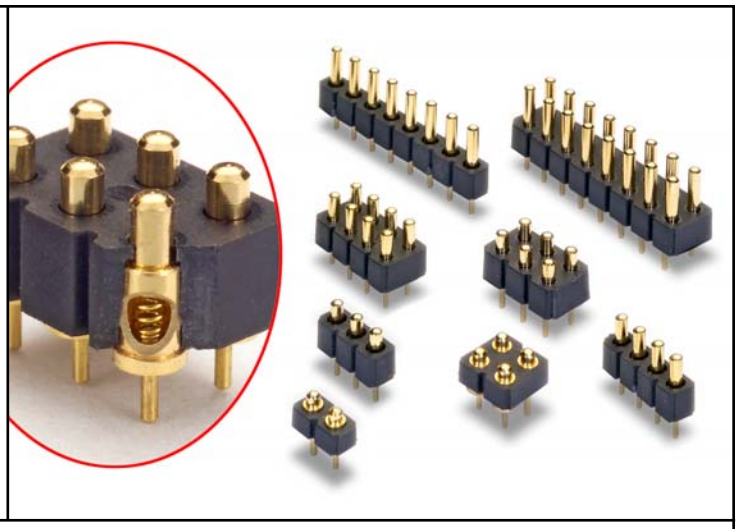

SINGLE ROW Series 821

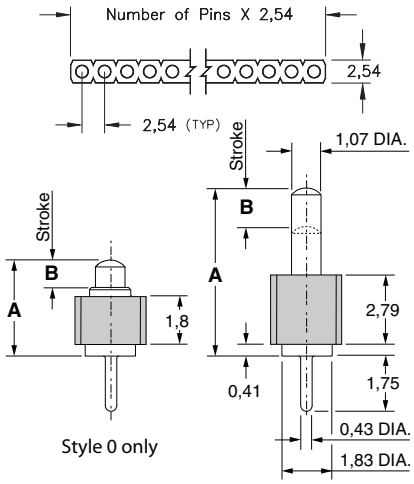

DOUBLE ROW Series 823

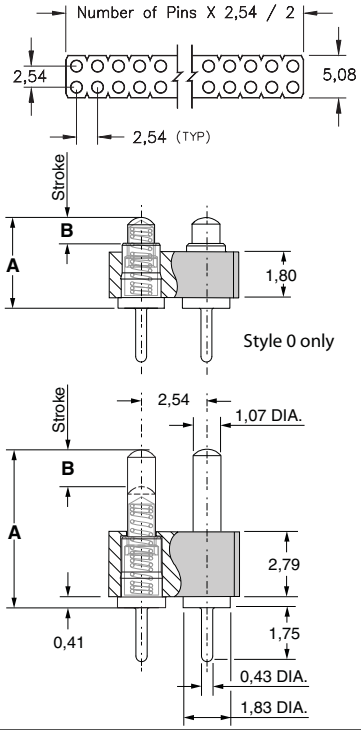

Ordering Information

Single Row Series 821

821-22-0XX-10-00X-101

Specify contact style 0-4

Specify # of contacts → 02-64

Double Row Series 823

823-22-0XX-10-00X-101

Specify contact style 0-4

Specify # of contacts → 04-72

CONTACT STYLE	INITIAL HEIGHT A	MAX. STROKE B
0	3,48	0,99
1	4,5	1,14
2	5,0	1,39
3	5,51	1,39
4	5,99	1,39

Technical Specifications

Materials:

Contact piston & Base: Machined copper alloy plated 0,51µm gold over 2,54µm nickel
Spring: Beryllium copper plated 0,25µm gold
Insulator: High temp. thermoplastic rated UL94 V-0

Mechanical:

Spring force @ initial height (A): 25 grams
Spring force @ mid stroke (B/2): 60 grams
Durability: 1,000,000 cycles min.

Electrical:

Voltage rating: 100Vrms/150Vdc
Current rating: 2A (continous), 3A (peak) per contact
Contact resistance: 20mΩ max.
Insulation resistance: 10,000MΩ min.
Dielectric strength: 700Vrms min.
Capacitance: 1pF max.

RoHS 2002/95/EC

- Modular contacts for use on 2,54 grid, available in a height of 7,67, supplied in single and double row contact strips.
- Precision-machined piston / base and gold plated components assure a 1,000,000 min. cycle life.
- Pistons have a 1,14 mid stroke & 2,29 max stroke.
- Low resistance, high current contacts are rated at 2 amps continuous, 3 amps peak.
- High temperature thermoplastic insulators are suitable for surface mount processes.
- 825 & 827 series contact strips are designed for manual placement into Ø 0,76±0.07 plated-thru-holes in the circuit board prior to hand, wave or reflow soldering.

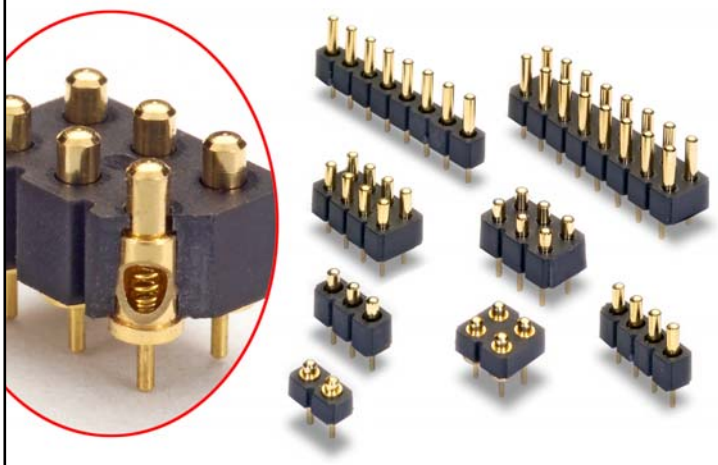

SINGLE ROW Series 825

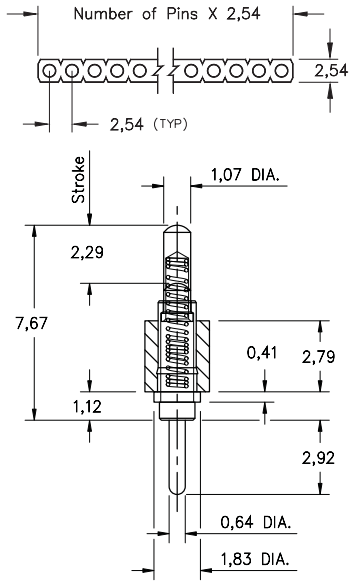

Ordering Information

Fig. 1	**Single Row Series 825** 825-22-0XX-10-001101 **Specify # of contacts** → 02-64
Fig. 2	**Double Row Series 827** 827-22-0XX-10-001101 **Specify # of contacts** → 04-72

DOUBLE ROW Series 827

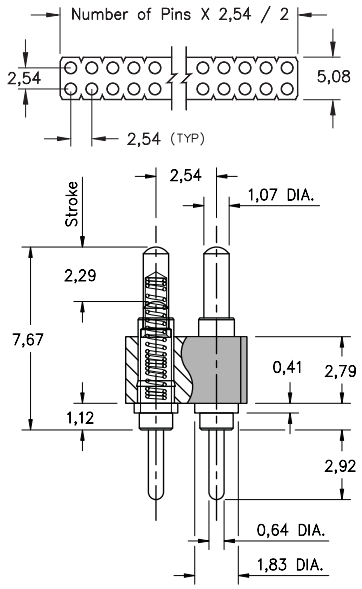

Technical Specifications

Materials:

Contact piston & Base: Machined copper alloy plated 0,51µm gold over 0,25µm nickel
Spring: Beryllium copper plated 0,25µm gold
Insulator: High temp. thermoplastic rated UL94 V-0

Mechanical:

Spring force @ initial height (A): 25 grams
Spring force @ mid stroke (B/2): 60 grams
Durability: 1,000,000 cycles min.

Electrical:

Voltage rating: 100Vrms/150Vdc
Current rating: 2A (continous), 3A (peak) per contact
Contact resistance: 20mΩ max.
Insulation resistance: 10,000MΩ min.
Dielectric strength: 700Vrms min.
Capacitance: 1pF max.

RoHS 2002/95/EC

- Modular contacts for use on 2,54 grid, available in ten heights from 6,48 to 10,92, supplied in single and double row contact strips.
- Precision-machined piston / base and gold plated components assure a 1,000,000 min. cycle life.
- Pistons have a 0,69 mid stroke & 1,4 max stroke.
- Low resistance, high current contacts are rated at 2 amps continuous, 3 amps peak.
- High temperature thermoplastic insulators are suitable for surface mount processes.
- 816 & 818 series contact strips are designed for manual placement into Ø 0,58±0,7 plated-thru-holes in the circuit board prior to intrusive reflow soldering.

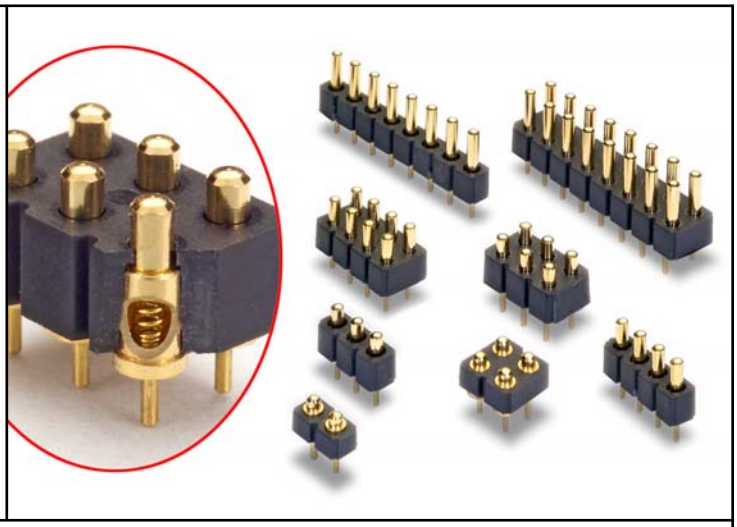

Single Row Series 816...00X101

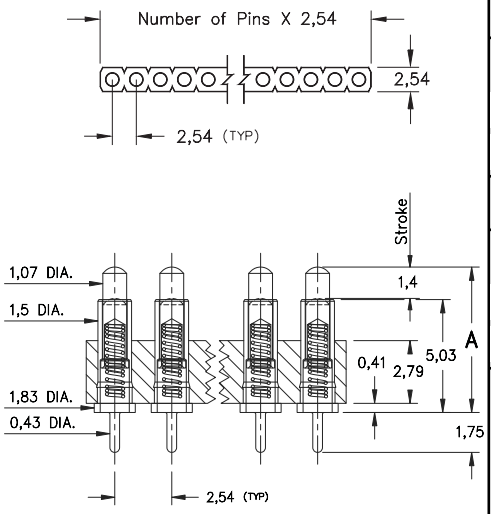

Double Row Series 818...00X101

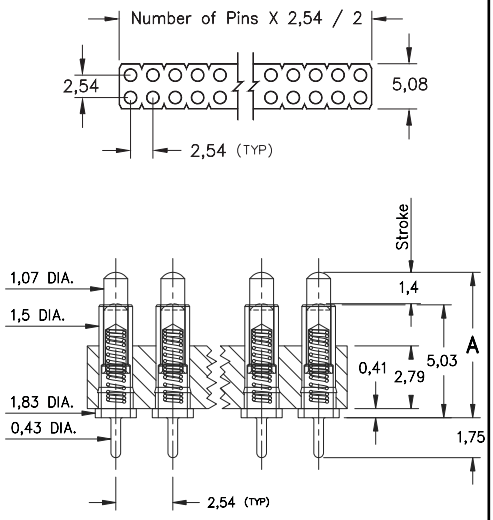

Ordering Information

Single Row Series 816...00X101

816-22-0XX-10-00X-101

Specify contact style 0-9

Specify # of contacts → 02-64

Double Row Series 818...00X101

818-22-0XX-10-00X-101

Specify contact style 0-9

Specify # of contacts → 04-72

CONTACT STYLE	INITIAL HEIGHT A	CONTACT STYLE	INITIAL HEIGHT A
0	6,48	**5**	8,89
1	6,99	**6**	9,4
2	7,49	**7**	9,91
3	8,0	**8**	10,41
4	8,51	**9**	10,92

Technical Specifications

Materials:

Contact piston & Base: Machined copper alloy plated 0,51µm gold over 2,54µm nickel
Spring: Beryllium copper plated 0,25µm gold
Insulator: High temp. thermoplastic rated UL94 V-0

Mechanical:

Spring force @ initial height (A): 25 grams
Spring force @ mid stroke (B/2): 60 grams
Durability: 1,000,000 cycles min.

Electrical:

Voltage rating: 100Vrms/150Vdc
Current rating: 2A (continous), 3A (peak) per contact
Contact resistance: 20mΩ max.
Insulation resistance: 10,000MΩ min.
Dielectric strength: 700Vrms min.
Capacitance: 1pF max.

RoHS 2002/95/EC

- Modular contacts for use on 1,27 grid, supplied in single and double row contact strips.
- Precision-machined piston / base and gold plated components assure a 1,000,000 min. cycle life.
- Pistons have a 0,69 mid stroke & 1,4 max stroke.
- Low resistance, high current contacts are rated at 2 amps continuous, 3 amps peak.
- High temperature thermoplastic insulators are suitable for surface mount processes.
- 854 & 855 series contact strips are designed for manual placement into Ø 0,58±0,08 plated-thru-holes in the circuit board.

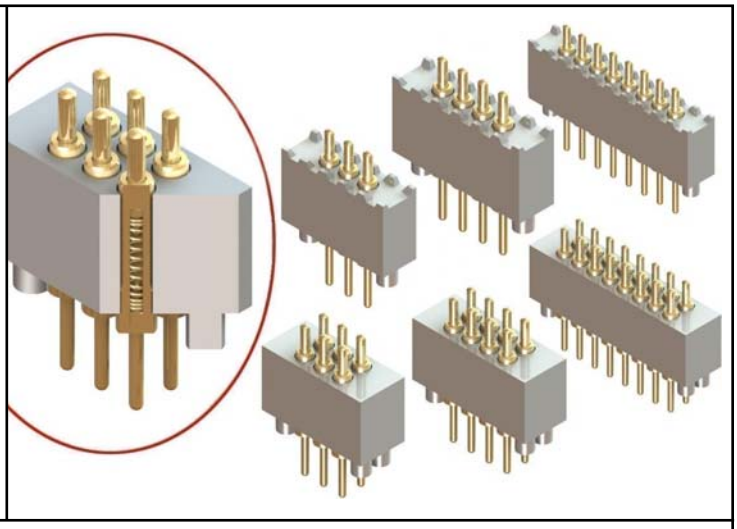

Single Row Series 854

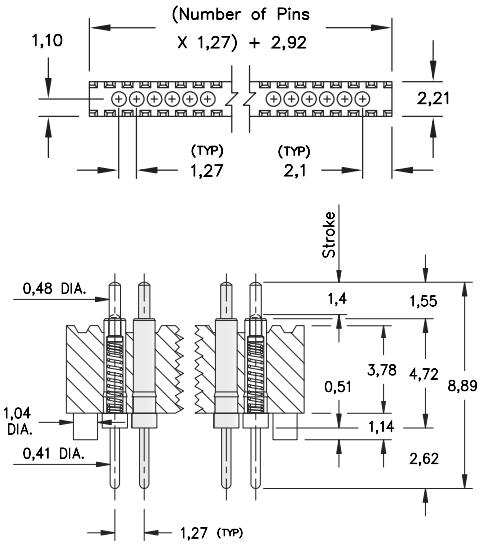

Double Row Series 855

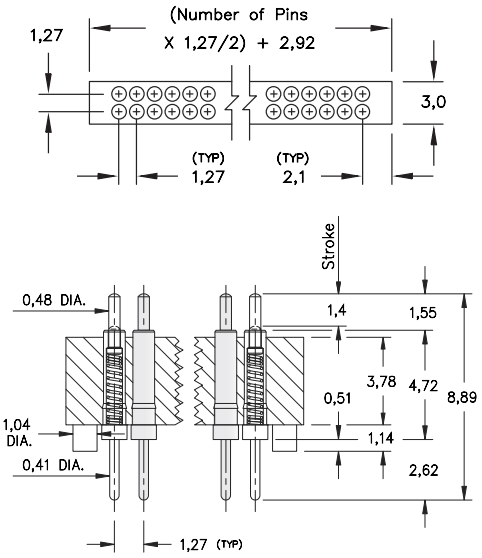

Ordering Information

Series 854 — **Single Row Through Hole Mount**

854-22-0_ _-10-001101

Specify # of pins → 02-20

Series 855 — **Double Row Through Hole Mount**

855-22-0_ _-10-001101

Specify # of pins → 04-40

For Electrical, Mechanical & Enviromental Data, See pg. 4.1

For RoHS compliance select ◇ plating code.

Technical Specifications

Materials:

Contact piston & Base: Machined copper alloy plated 0,51µm gold over 2,54µm nickel
Spring: Beryllium copper plated 0,25µm gold
Insulator: High temp. thermoplastic rated UL94 V-0

Mechanical:

Spring force @ initial height (A): 25 grams
Spring force @ mid stroke (B/2): 60 grams
Durability: 1,000,000 cycles min.

Electrical:

Voltage rating: 100Vrms/150Vdc
Current rating: 2A (continous), 3A (peak) per contact
Contact resistance: 20mΩ max.
Insulation resistance: 10,000MΩ min.
Dielectric strength: 700Vrms min.
Capacitance: 1pF max.

RoHS 2002/95/EC

SPRING-LOADED CONNECTORS
1,27 Grid Surface Mount, High Density
Single and Double Row Strips

Series 854...30-001101
855...30-001101

- Modular contacts for use on 1,27 grid, supplied in single and double row contact strips.
- Precision-machined piston / base and gold plated components assure a 1,000,000 min. cycle life.
- Pistons have a 0,69 mid stroke & 1,4 max stroke.
- Low resistance, high current contacts are rated at 2 amps continuous, 3 amps peak.
- High temperature thermoplastic insulators are suitable for surface mount processes.
- 854 & 855 series contact strips are designed for manual placement onto 1,02 Ø solder pads.

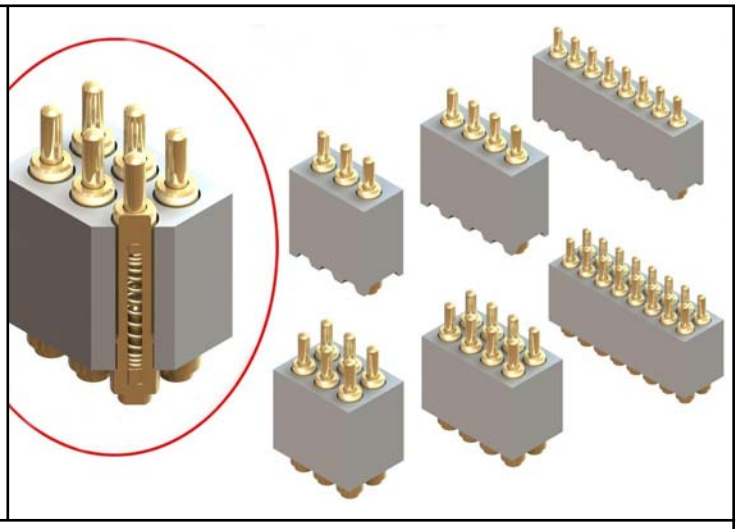

Single Row Series 854

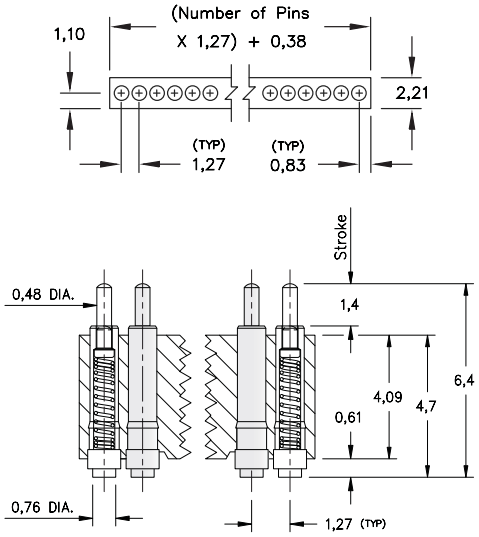

Double Row Series 855

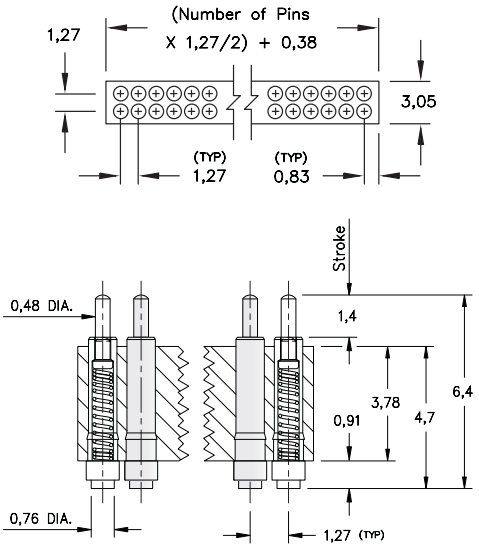

Ordering Information

Series 854	Single Row Surface Mount
854-22-0_ _-30-001101	
Specify # of pins →	02-20

Series 855	Double Row Surface Mount
855-22-0_ _-30-001101	
Specify # of pins →	04-40

For Electrical, Mechanical & Enviromental Data, See pg. 4.1

For RoHS compliance select ◇ plating code.

Technical Specifications

Materials:

Contact piston & Base: Machined copper alloy plated 0,51µm gold over 2,54µm nickel
Spring: Beryllium copper plated 0,25µm gold
Insulator: High temp. thermoplastic rated UL94 V-0

Mechanical:

Spring force @ initial height (A): 25 grams
Spring force @ mid stroke (B/2): 60 grams
Durability: 1,000,000 cycles min.

Electrical:

Voltage rating: 100Vrms/150Vdc
Current rating: 2A (continous), 3A (peak) per contact
Contact resistance: 20mΩ max.
Insulation resistance: 10,000MΩ min.
Dielectric strength: 700Vrms min.
Capacitance: 1pF max.

RoHS 2002/95/EC

2,54 Grid Target Connectors for Spring-Loaded Assemblies
Single Row

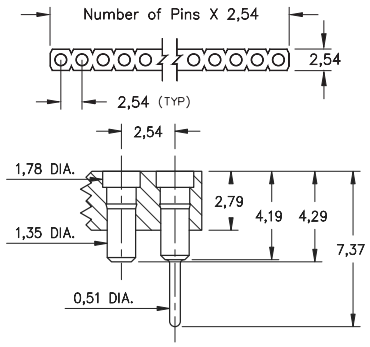

Fig. 1

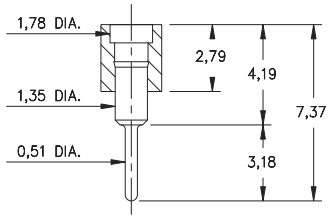

Fig. 2

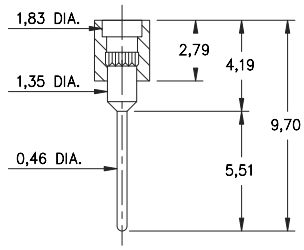

Fig. 3

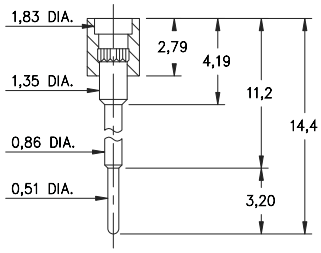

Fig. 4

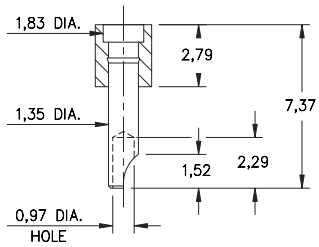

Fig. 5

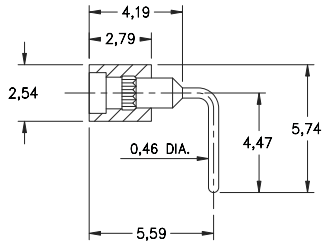

Fig. 6

- Series 319, 330 and 399 single row strips may be cut to any length.
- Spring Target connectors present a large flat surface for making tangent connections to our standard 1,07 dia spring pin plungers. The target connectors provide an excellent gold plated conductive path back to the board mounted spring pin connector.
- Target connectors use MM #1938, #1940, #1941, #1942 and #3024 pins. See page 185 for details.
- Insulators are high temp. thermoplastic.

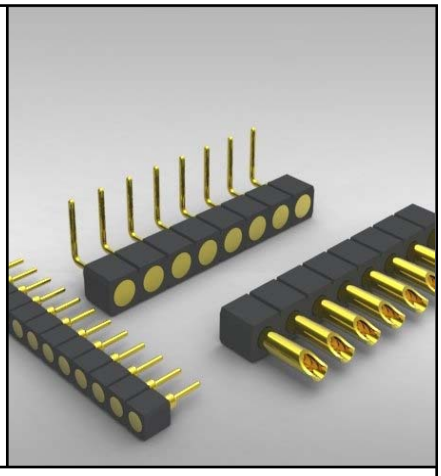

Ordering Information

Fig. 1	**Series 319...041**	**SMT w/ Alignment Pins**
	319-10-1_ _-30-041000	
	Specify # of pins →	01-64
Fig. 2	**Series 319...001**	**Standard Solder Tails**
	319-10-1_ _-00-001000	
	Specify # of pins →	01-64
Fig. 3	**Series 319...002**	**Long Solder Tails**
	319-10-1_ _-00-002000	
	Specify # of pins →	01-64
Fig. 4	**Series 319...005**	**Elevated Solder Tails**
	319-10-1_ _-00-005000	
	Specify # of pins →	01-64
Fig. 5	**Series 330...240**	**Solder Cups**
	330-10-1_ _-00-240000	
	Specify # of pins →	01-64
Fig. 6	**Series 399...008**	**Right Angle Solder Tails**
	399-10-1_ _-10-008000	
	Specify # of pins →	01-64

For Electrical, Mechanical & Enviromental Data, See pg. 4

RoHS 2002/95/EC

PLATING CODE =	**10**			
Pin Plating	0,25µm Au			

2,54 Grid Target Connectors for Spring-Loaded Assemblies
Double Row

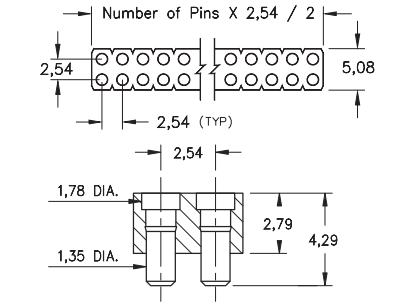

Coplanarity 0,13. For Pin Counts >20 positions consult Technical Support.

Fig. 1

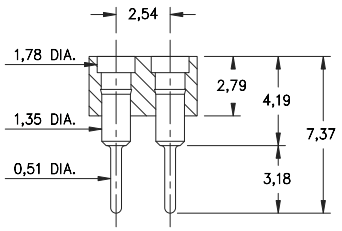

Fig. 2

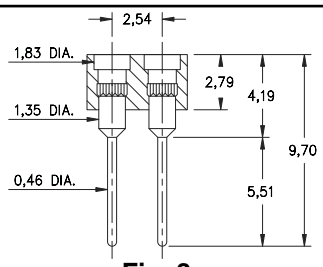

Fig. 3

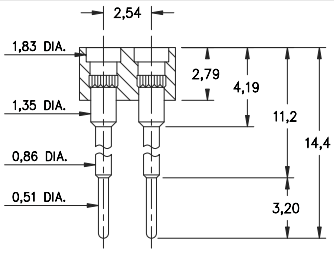

Fig. 4

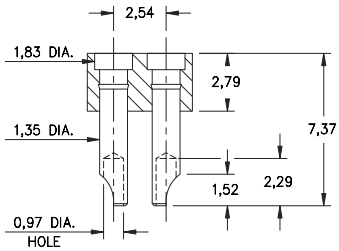

Fig. 5

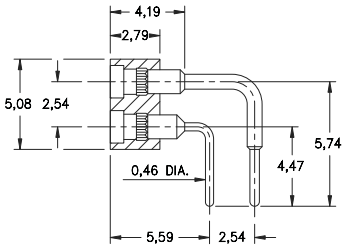

Fig. 6

- Series 419, 430 and 499 double row strips may be cut to any length.
- Spring Target connectors present a large flat surface for making tangent connections to our standard 1,07 dia spring pin plungers. The target connectors provide an excellent gold plated conductive path back to the board mounted spring pin connector.
- Target connectors use MM #1938, #1940, #1941, #1942 and #3024 pins. See page 185 for details.
- Insulators are high temp. thermoplastic.

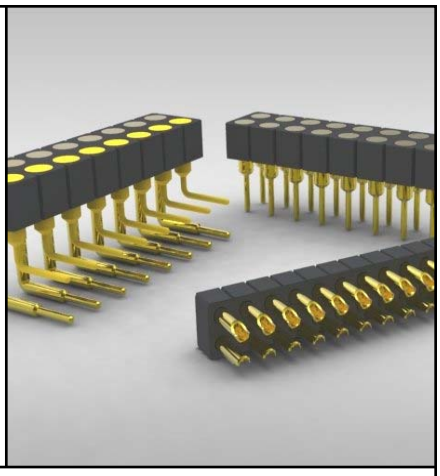

Ordering Information

Fig. 1	**Series 419...041**	**Surface Mount**
	419-10-2_ _-30-041000	
	Specify # of pins →	04-64
Fig. 2	**Series 419...001**	**Standard Solder Tails**
	419-10-2_ _-00-001000	
	Specify # of pins →	04-64
Fig. 3	**Series 419...002**	**Long Solder Tails**
	419-10-2_ _-00-002000	
	Specify # of pins →	04-64
Fig. 4	**Series 419...005**	**Elevated Solder Tails**
	419-10-2_ _-00-005000	
	Specify # of pins →	04-64
Fig. 5	**Series 430...240**	**Solder Cups**
	430-10-2_ _-00-240000	
	Specify # of pins →	04-64
Fig. 6	**Series 499...008**	**Right Angle Solder Tails**
	499-10-2_ _-10-008000	
	Specify # of pins →	04-64

For Electrical, Mechanical & Enviromental Data, See pg. 4

RoHS 2002/95/EC

PLATING CODE =	**10**			
Pin Plating	0,25µm Au			

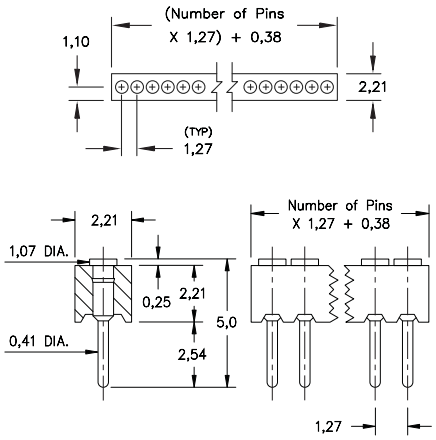

Fig. 1

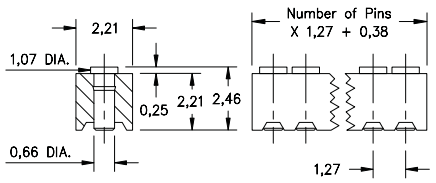

Coplanarity 0,13. For Pin Counts >20 positions consult Technical Support.

Fig. 2

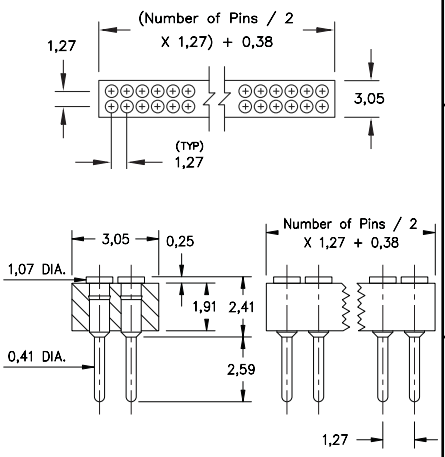

Fig. 3

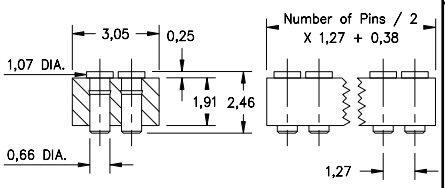

Coplanarity 0,13. For Pin Counts >40 positions consult Technical Support.

Fig. 4

- Series 856, 857 single and double row strips may be cut to any length.
- Spring Target connectors present a large flat surface for making tangent connections to our standard 0,48 dia spring pin plungers. The target connectors provide an excellent gold plated conductive path back to the board mounted spring pin connector.
- Target connectors use MM #1933 and #1935 pins. See page 180 for details.
- Insulators are high temp. thermoplastic.

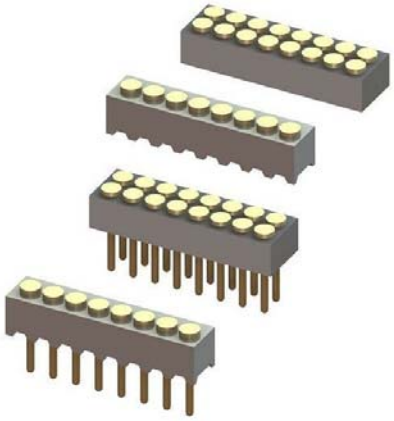

Ordering Information

Fig. 1	**Series 856...051**	**Standard Solder Tails**
	856-10-0_ _-10-051000	
	Specify # of pins →	01-20
Fig. 2	**Series 856...051**	**Surface Mount**
	856-10-0_ _-30-051000	
	Specify # of pins →	02-20
Fig. 3	**Series 857...051**	**Standard Solder Tails**
	857-10-0_ _-10-051000	
	Specify # of pins →	04-40
Fig. 4	**Series 857...051**	**Surface Mount**
	857-10-0_ _-30-051000	
	Specify # of pins →	04-40

For Electrical, Mechanical & Enviromental Data, See pg. 4

RoHS 2002/95/EC

PLATING CODE =	**10**			
Pin Plating	0,25µm Au			

0900-0

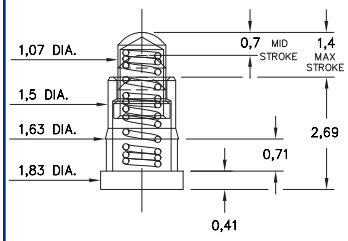

0900-0-00-00-00-00-11-0
Short Stroke, Surface mount
Lowest profile

0900-1⇒4

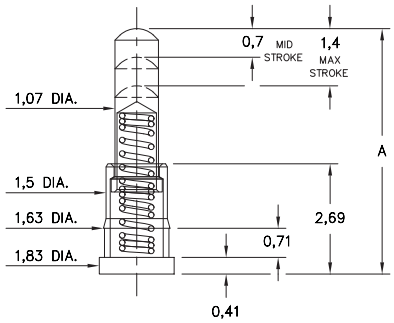

Basic Part Number	Length A
0900-1	4,5
0900-2	5,0
0900-3	5,51
0900-4	5,99

0900-X-00-00-00-00-11-0
Standard Stroke, Surface mount
Low profile

0934

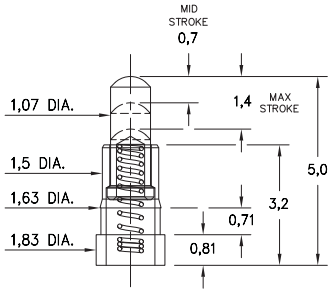

0934-0-15-20-74-14-26-0
Standard Stroke
Surface mount

0936

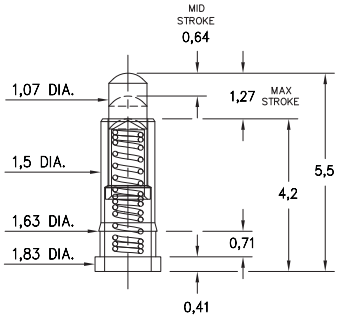

0936-0-15-20-75-14-11-0
Standard Stroke
Surface mount

0928

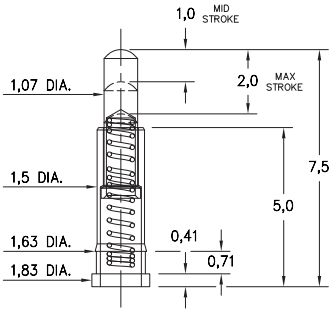

0928-0-15-20-77-14-11-0
Long Stroke
Surface mount

0907-0⇒9

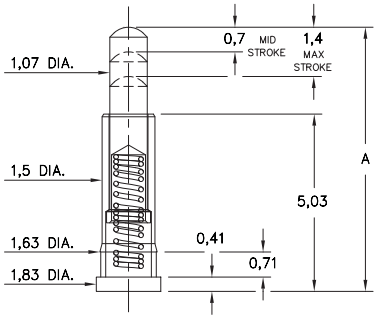

Basic Part Number	Length A
0907-0	6,48
0907-1	6,99
0907-2	7,49
0907-3	8,0
0907-4	8,51
0907-5	8,89
0907-6	9,4
0907-7	9,91
0907-8	10,41
0907-9	10,92

0907-X-15-20-75-14-11-0
Standard Stroke, Surface mount
High profile

0913

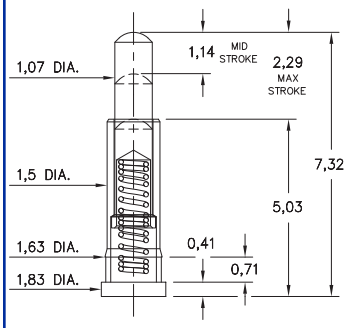

0913-0-15-20-77-14-11-0
Long Stroke
Surface mount

0925

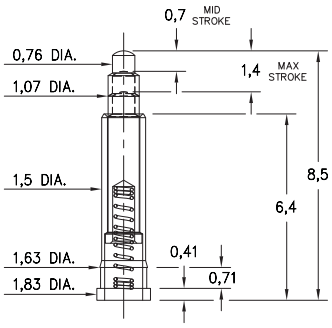

0925-0-15-20-73-14-26-0
Standard Stroke
Surface mount

0927

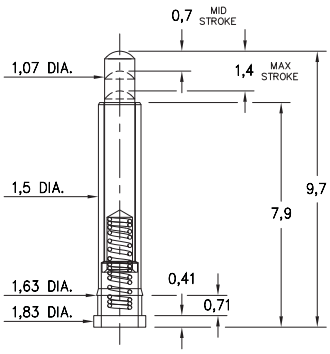

0927-0-15-20-75-14-11-0
Standard Stroke
Surface mount

0905

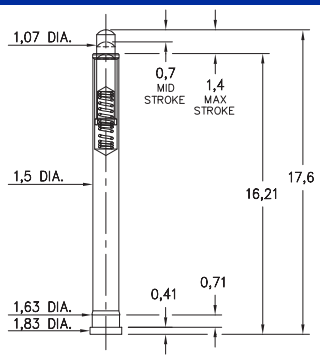

0905-0-00-00-00-00-11-0
Standard Stroke, Surface mount
Highest Profile

ORDER CODE: 09XX - X - 15 - 20 - 7X - 14 - XX - 0

Spring Number ⟶

MATERIAL SPECIFICATIONS:

SLEEVE & PLUNGER MATERIAL: Copper Alloy
SPRING MATERIAL: Beryllium Copper
SLEEVE & PLUNGER FINISH: 0,51 µm Gold over Nickel
SPRING FINISH: 0,25 µm Gold over Nickel
DIMENSION IN INCHES:
TOLERANCES ON: LENGTHS: ±0,15
DIAMETERS: ±0,05
ANGLES: ± 2°

RoHS 2002/95/EC

MECHANICAL & ELECTRICAL SPECIFICATIONS:

DURABILITY: 1,000,000 cycles
CURRENT RATING: 2A continuous, 3A peak
CONTACT RESISTANCE: 20 mΩ max.

SPRING NUMBER	Mid. STROKE	Max. STROKE	FORCE @ Mid. Stroke	Initial Force (Pre-load)
73	0,7	1,4	60 g	25 g
74	0,7	1,4	50 g	15 g
75	0,7	1,4	60 g	25 g
77	1,14	2,29	60 g	25 g

73, 74, 75, 77 Springs are not Interchangeable

0906-0

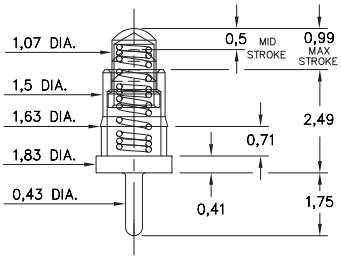

0906-0-15-20-76-14-11-0
Short Stroke
Solder mount in 0,46 min. mounting hole

0906-1⇒4

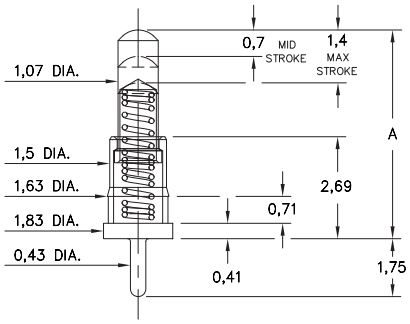

Basic Part Number	Length A
0906-1	4,5
0906-2	5,0
0906-3	5,51
0906-4	5,99

0906-X-15-20-75-14-11-0
Standard Stroke
Solder mount in 0,46 min. mounting hole

0930

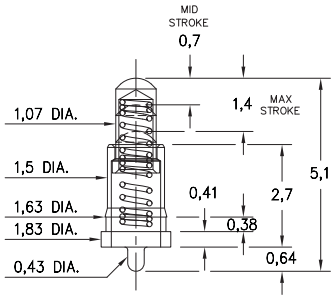

0930-0-15-20-75-14-11-0
Standard Stroke
Solder Mount in 0,46 min. mounting hole

0914

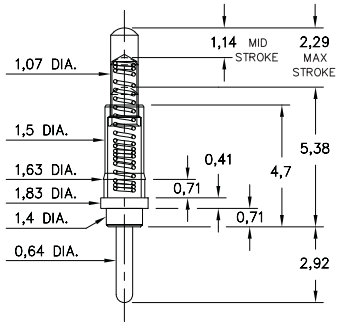

0914-0-15-20-77-14-11-0
Long Stroke
Solder mount in 0,69 min. mounting hole

0932

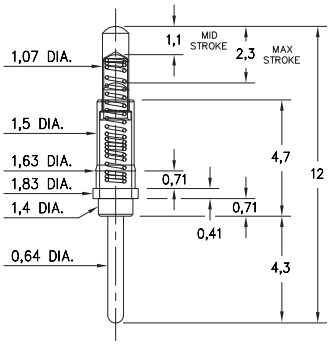

0932-0-15-20-77-14-11-0
Long Stroke
Solder Mount in 0,69 min. mounting hole

0908-0⇒9

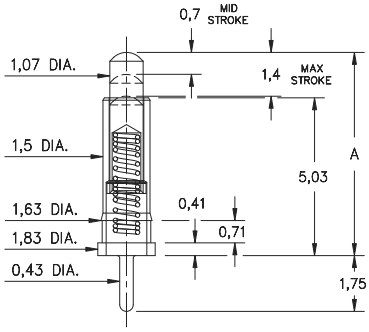

Basic Part Number	Length A
0908-0	6,48
0908-1	6,99
0908-2	7,49
0908-3	8,0
0908-4	8,51
0908-5	8,89
0908-6	9,4
0908-7	9,91
0908-8	10,41
0908-9	10,92

0908-X-15-20-75-14-11-0
Standard Stroke
Solder mount in 0,46 min. mounting hole

0901

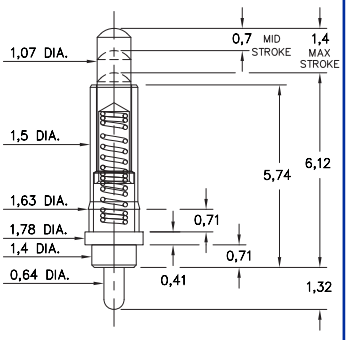

0901-0-00-00-00-00-11-0
Standard Stroke
Solder mount in 0,69 min. mounting hole

0929

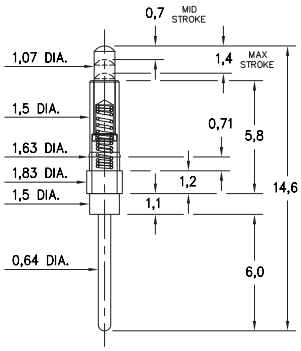

0929-0-15-20-75-14-11-0
Standard Stroke
Solder Mount in 0,69 min. mounting Hole

0922

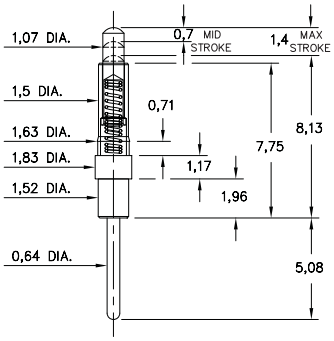

0922-0-15-20-75-14-11-0
Standard Stroke
Solder mount in 0,69 min. mounting hole

0980

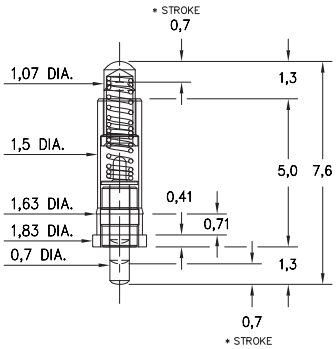

0980-0-15-20-75-14-11-0
Double action, *1,4 Combined Stroke
Mount between parallel circuit boards

ORDER CODE: 09XX - X - 15 - 20 - 7X - 14 - 11 - 0

Spring Number

MATERIAL SPECIFICATIONS:

SLEEVE & PLUNGER MATERIAL: Copper Alloy
SPRING MATERIAL: Beryllium Copper
SLEEVE & PLUNGER FINISH: 0,51 µm Gold over Nickel
SPRING FINISH: 0,25 µm Gold over Nickel
DIMENSION IN INCHES:
TOLERANCES ON: LENGTHS: ±0,15
DIAMETERS: ±0,05
ANGLES: ± 2°

RoHS 2002/95/EC

MECHANICAL & ELECTRICAL SPECIFICATIONS:

DURABILITY: 1,000,000 cycles
CURRENT RATING: 2A continuous, 3A peak
CONTACT RESISTANCE: 20 mΩ max.

SPRING NUMBER	Mid. STROKE	Max. STROKE	FORCE @ Mid. Stroke	Initial Force (Pre-load)
75	0,7	1,4	60 g	25 g
76	0,5	0,99	60 g	25 g
77	1,14	2,29	60 g	25 g

75, 76, 77 Springs are not Interchangeable

0910-0

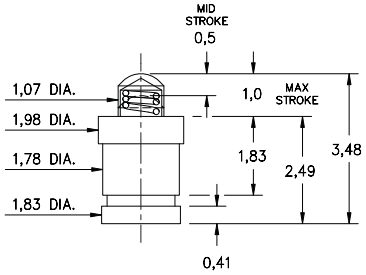

0910-0-57-20-76-14-11-0
Short Stroke, Surface mount
Packaged on 16mm wide carrier tape: 1,500 parts per 330 reel.

0910-1⇒4

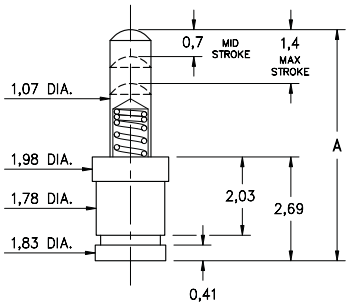

0910-X-57-20-75-14-11-0
Standard Stroke, Surface mount
Packaged on carrier tape.
See chart for tape width and qty. per reel

Basic Part Number	Length A
0910-1	4,5
0910-2	5,0
0910-3	5,51
0910-4	5,99

Basic Part Number	Tape Width	Quantity per Reel
0910-1	16mm	1,500
0910-2	24mm	1,100
0910-3	24mm	1,100
0910-4	24mm	1,100

0967

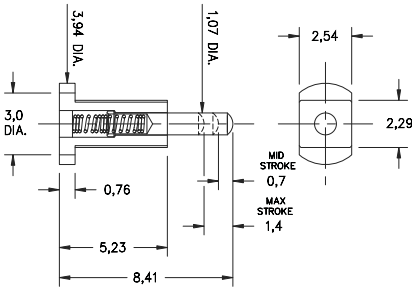

0967-0-15-20-75-14-11-0
Standard Stroke, Horizontal Surface mount
Also available on 16mm wide carrier tape: 2,200 parts per 330 reel.
Order as: 0967-0-58-20-75-14-11-0

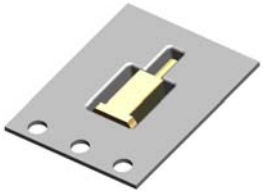

P.C.B. Layout

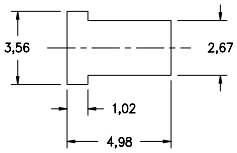

0990-0

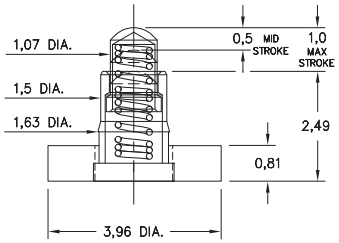

0990-0-50-20-76-14-11-0
Short Stroke, Surface mount
Large Base

0990-1⇒4

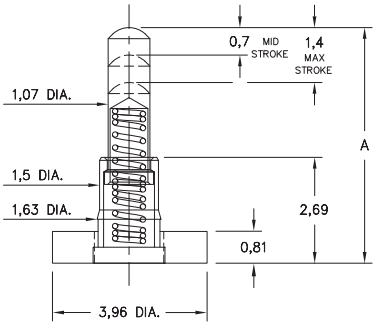

Basic Part Number	Length A
0990-1	4,5
0990-2	5,0
0990-3	5,51
0990-4	5,99

0990-X-50-20-75-14-11-0
Standard Stroke, Surface mount
Large Base

0997-0⇒9

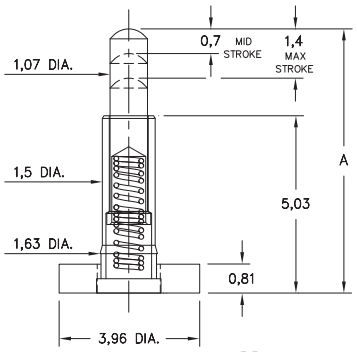

Basic Part Number	Length A
0997-0	6,48
0997-1	6,99
0997-2	7,49
0997-3	8,0
0997-4	8,51
0997-5	8,89
0997-6	9,4
0997-7	9,91
0997-8	10,41
0997-9	10,92

0997-X-50-20-75-14-11-0
Standard Stroke, Surface mount
Large Base

ORDER CODE: 09XX - X - XX - 20 - 7X - 14 - 11 - 0

Spring Number

MATERIAL SPECIFICATIONS:

SLEEVE & PLUNGER MATERIAL: Copper Alloy
SPRING MATERIAL: Beryllium Copper
SLEEVE & PLUNGER FINISH: 0,51 µm Gold over Nickel
SPRING FINISH: 0,25 µm Gold over Nickel
DIMENSION IN INCHES:
TOLERANCES ON: LENGTHS: ±0,15
DIAMETERS: ±0,05
ANGLES: ± 2°

RoHS 2002/95/EC

MECHANICAL & ELECTRICAL SPECIFICATIONS:

DURABILITY: 1,000,000 cycles
CURRENT RATING: 2A continuous, 3A peak
CONTACT RESISTANCE: 20 mΩ max.

SPRING NUMBER	Mid. STROKE	Max. STROKE	FORCE @ Mid. Stroke	Initial Force (Pre-load)
75	0,7	1,4	60 g	25 g
76	0,5	0,99	60 g	25 g

75 & 76 Springs are not Interchangeable

0950

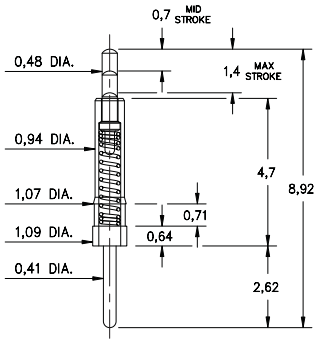

0950-0-15-20-71-14-11-0
Standard Stroke
Solder Mount in 0,46 min. mounting hole

0951

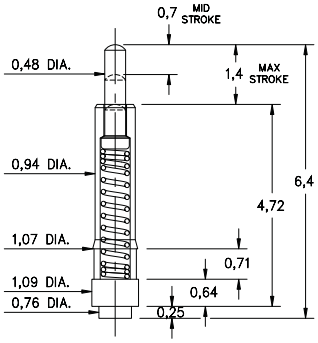

0951-0-15-20-71-14-11-0
Standard Stroke, Surface mount
High profile

ORDER CODE: 09XX - X - 15 - 20 - 71 - 14 - 11 - 0

Spring Number

MATERIAL SPECIFICATIONS:

SLEEVE & PLUNGER MATERIAL: Copper Alloy
SPRING MATERIAL: Beryllium Copper
SLEEVE & PLUNGER FINISH: 0,51 µm Gold over Nickel
SPRING FINISH: 0,25 µm Gold over Nickel
DIMENSION IN INCHES:
TOLERANCES ON: LENGTHS: ±0,15
DIAMETERS: ±0,05
ANGLES: ± 2°

RoHS 2002/95/EC

MECHANICAL & ELECTRICAL SPECIFICATIONS:

DURABILITY: 1,000,000 cycles
CURRENT RATING: 2A continuous, 3A peak
CONTACT RESISTANCE: 20 mΩ max.

SPRING NUMBER	Mid. STROKE	Max. STROKE	FORCE @ Mid. Stroke	Initial Force (Pre-load)
71	0,7	1,4	50 g	15 g

Springs are not Interchangeable

0850

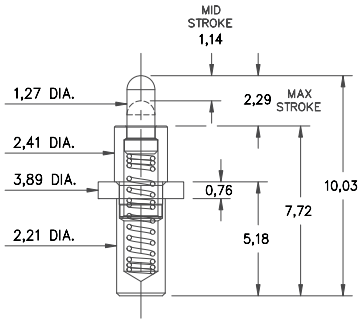

0850-0-15-20-83-14-11-0
Power Spring Pin
Solder Mount in 2,29 min. mounting hole

Specifications for #0850-0:

Material:
- Sleeve & Plunger Material: Copper Alloy
- Spring Material: Stainless Steel 302.

Mechanical Characteristics:
- Force @ mid-stroke (1,14) = 120 grams
- Maximum stroke length = 2,29
- Mechanical life: 1,000,000 cycles

Electrical Characteristics:
- Rated Current (Free air): Continuous 9 amps @ 10° C temperature rise.

0851

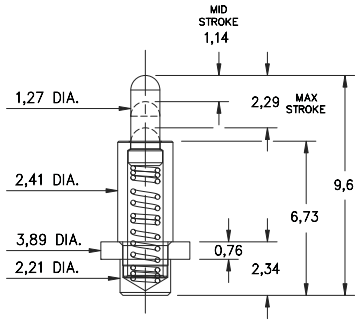

0851-0-15-20-82-14-11-0
Power Spring Pin
Solder Mount in 2,29 min. mounting hole

Specifications for #0851-0:

Material:
- Sleeve & Plunger Material: Copper Alloy
- Spring Material: Stainless Steel 302.

Mechanical Characteristics:
- Force @ mid-stroke (1,14) = 120 grams
- Maximum stroke length = 2,29
- Mechanical life: 1,000,000 cycles

Electrical Characteristics:
- Rated Current (Free air): Continuous 9 amps @ 10° C temperature rise.

ORDER CODE: 085X - X - 15 - 20 - 8X - 14 - 11 - 0

Spring Number

MATERIAL SPECIFICATIONS:

SLEEVE & PLUNGER MATERIAL: Copper Alloy
SPRING MATERIAL: Stainless Steel 302
SLEEVE & PLUNGER FINISH: 0,51 µm Gold over Nickel
SPRING FINISH: 0,25 µm Gold over Nickel
DIMENSION IN INCHES:
TOLERANCES ON: LENGTHS: ±0,15
DIAMETERS: ±0,05
ANGLES: ± 2°

RoHS 2002/95/EC

MECHANICAL & ELECTRICAL SPECIFICATIONS:

DURABILITY: 1,000,000 cycles
Rated Current (Free air): Continuous 9 amps @ 10° C temperature rise
CONTACT RESISTANCE: 20 mΩ max.

SPRING NUMBER	Mid. STROKE	Max. STROKE	FORCE @ Mid. Stroke	Initial Force (Pre-load)
82	1,14	2,29	120 g	25 g
83	1,14	2,29	120 g	25 g

82 & 83 Springs are not Interchangeable

DIP SOCKETS, CARRIERS AND HEADERS
QUICK SELECTOR CHART

USE THIS CONVENIENT CHART TO SELECT THE RIGHT DIP PRODUCT FOR YOUR APPLICATION.

1) Determine the style of pin needed to meet your requirement.
2) Select the appropriate insulator frame and grid spacing.
3) Turn to indicated page for detail and ordering information.
4) * denotes pins that Mill-Max will custom assemble in a selected insulator. Contact our applications engineers for further information.

DUAL-IN-LINE SOCKETS AND CARRIERS

SELECT PIN → | SELECT INSULATOR ↓ | TURN TO PAGE # ↘

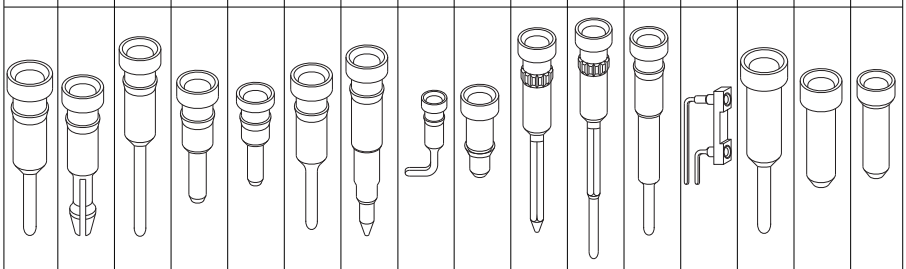

	Standard Solder Tail	Clinch Pin	Long Solder Tail	Very Low Profile	Ultra Low Profile	Auto-Insertion	Solderless Press-Fit	Surface Mount: Gull-Wing	Surface Mount: Stub Tail	1-4 Level Wrapost	Pluggable Wrapost	Elevated	Right Angle	Socket Carriers: Solder Tail	Socket Carriers: Low Profile	Socket Carriers: Ultra Low Profile
OPEN FRAME DIP	22 32	27	23	24	25	26	28 29	36	38 39	41	42	43		44	45 46	47
CAPACITOR DIP	30									30						
CLOSED FRAME DIP	31 33		*	*		*	*	37	40	31 34	*	*	61	*	*	*

For Shrink DIP Sockets (on 1,78 grid), see page 57 - 60

For Technical Specifications, see page 4.

DUAL-IN-LINE HEADERS

SELECT PIN → | SELECT INSULATOR ↓ | TURN TO PAGE # ↘

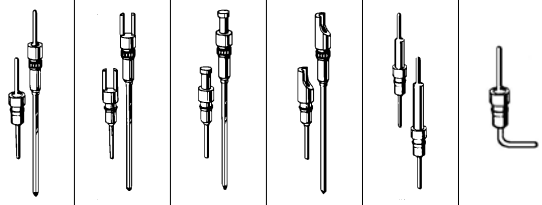

	0,46 Dia. Solder Tail & Wrapost	Slotted Head Solder Tail & Wrapost	Turret Head Solder Tail & Wrapost	Solder Cup Solder Tail & Wrapost	Elevated Pin to Pin	Gull Wing Surface Mount
OPEN FRAME DIP	48	49	50	51	52 54 53 55	56

DUAL-IN-LINE INSULATORS
Standard Open Frame

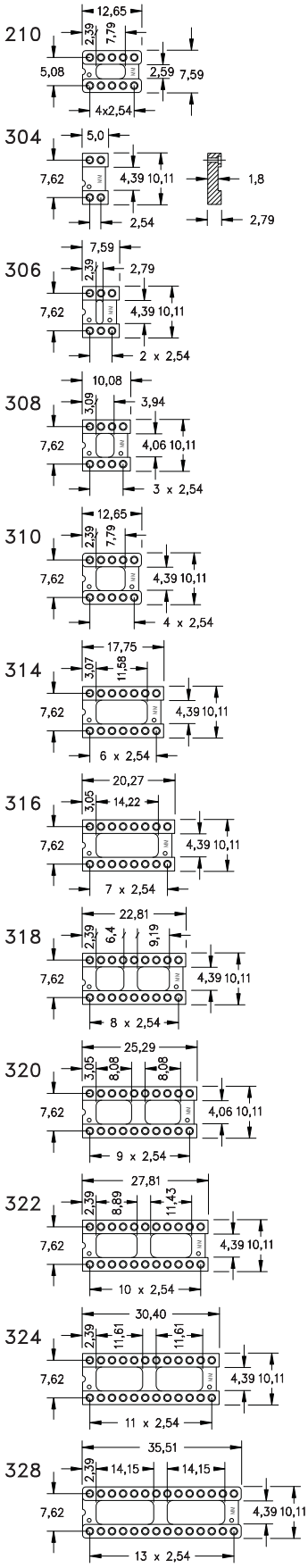

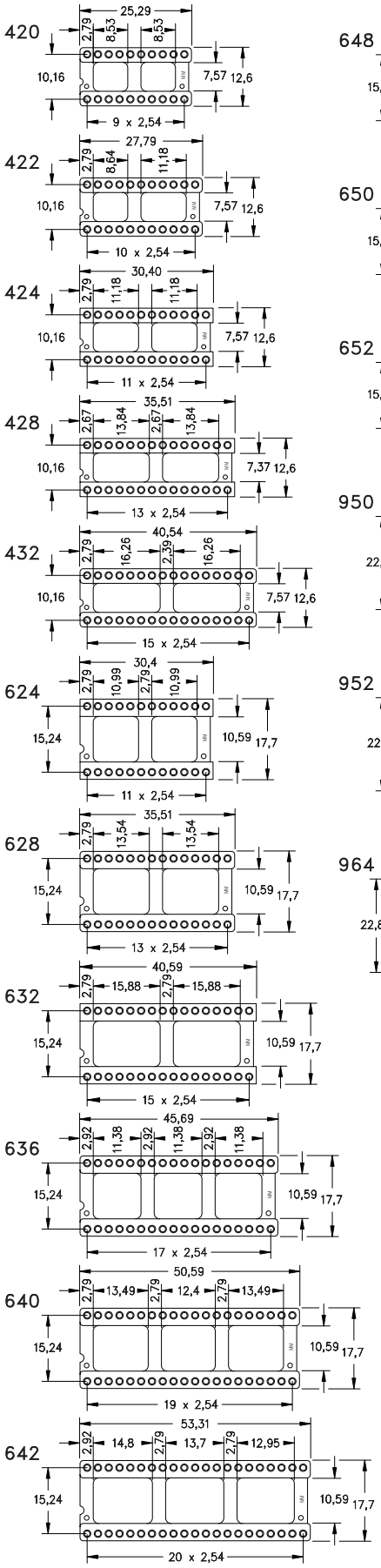

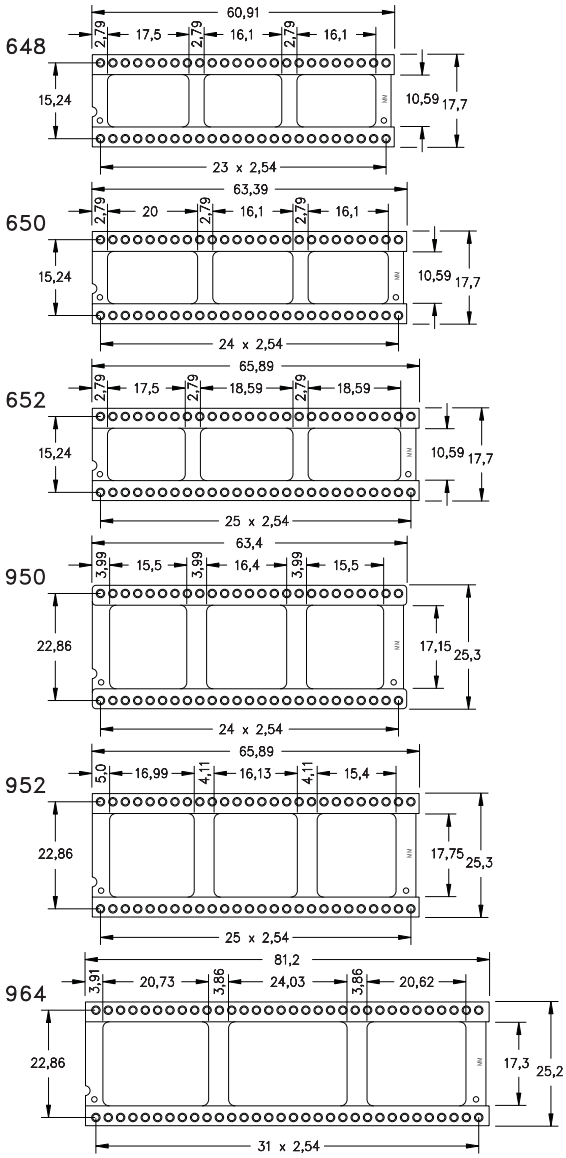

Example Part Number: 314
3 = 7,62 row to row spacing
14 = 14 total positions

Open frame insulators 320, 624, 628, 632 and 640 are available on special request without center bars. Order number same as corresponding socket or pin header but with suffix 050 added.

Example:
110-93-628-41-001000 standard
110-93-628-41-001050 without center bar.

Standard material for open frame insulators is a High temp. PCT. This is used for traditional wave and hand soldering. This plastic has a heat deflection temperature of 255°C (491°F) and is suitable for all types of reflow soldering including "lead-free".

DUAL-IN-LINE INSULATORS
Standard, Closed Frame
Ultra Low Profile, Open Frame

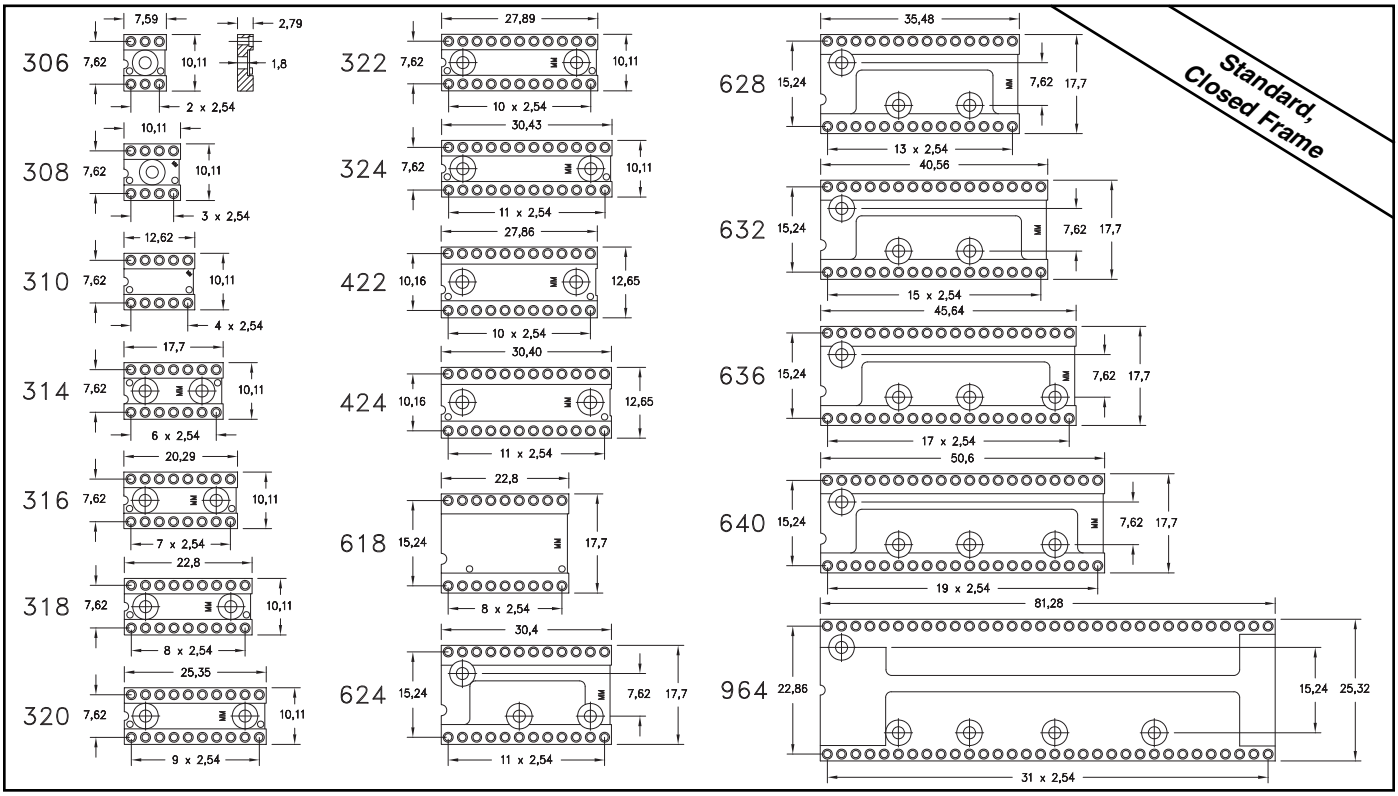

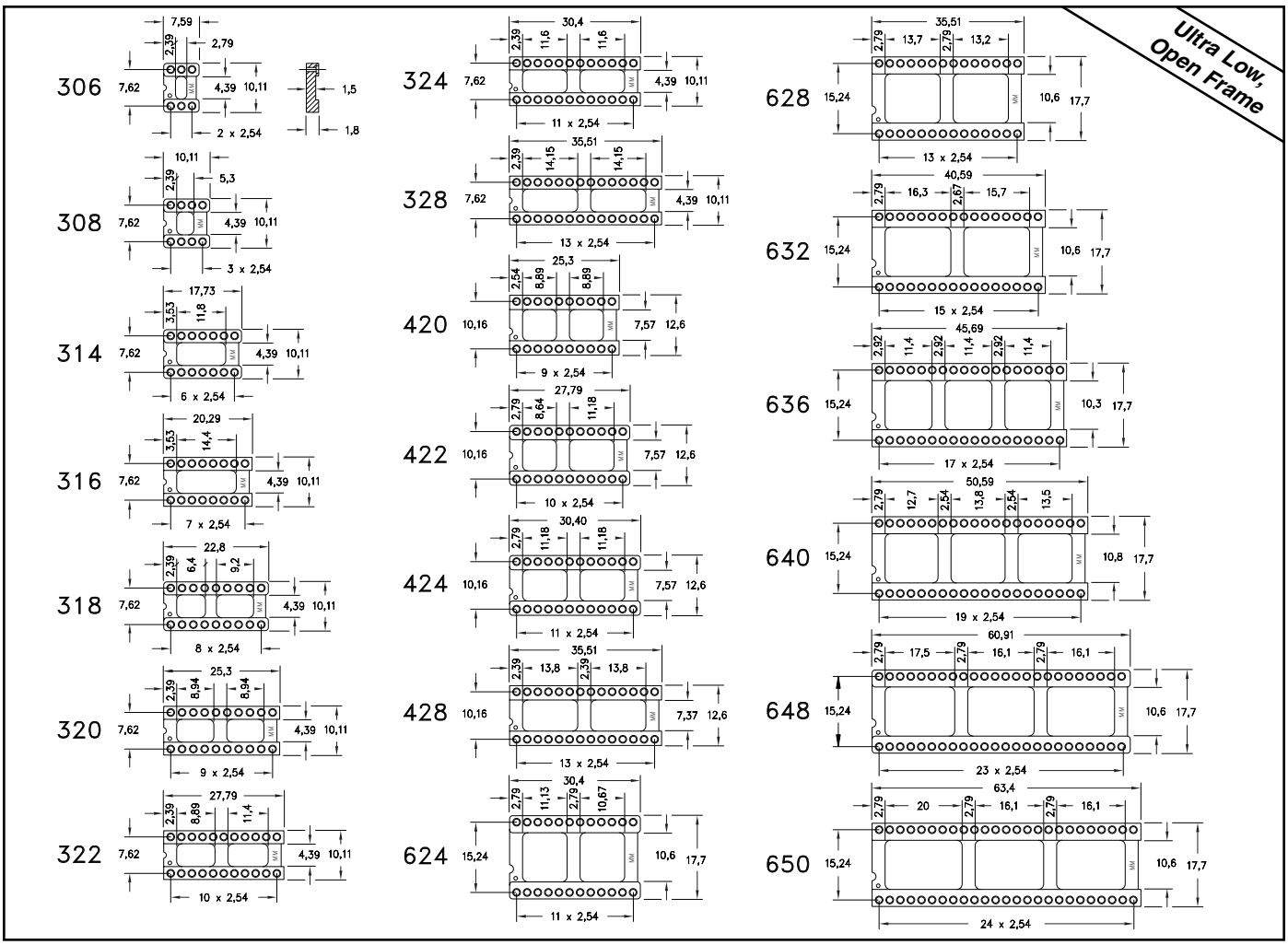

DUAL-IN-LINE INSULATORS
Shrink DIP, Open and Closed Frame
Automatic Insertion, Open Frame

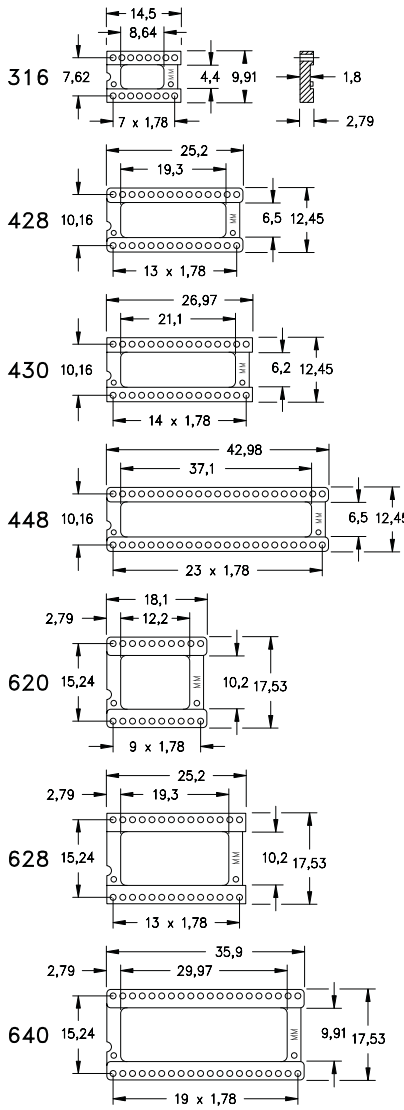

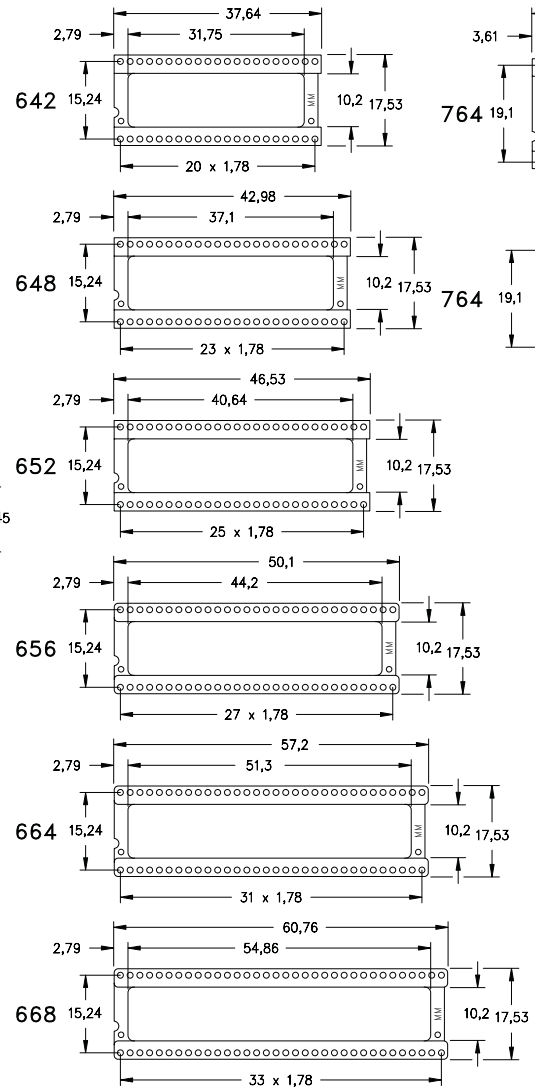

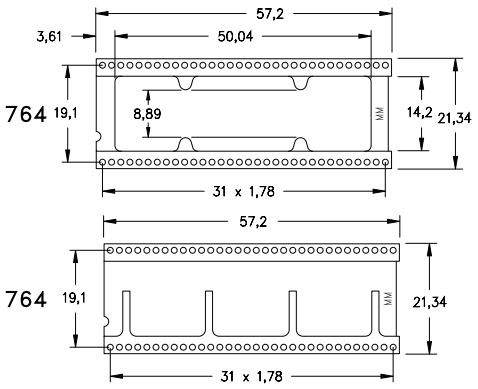

Shrink DIP, Open & Closed Frame

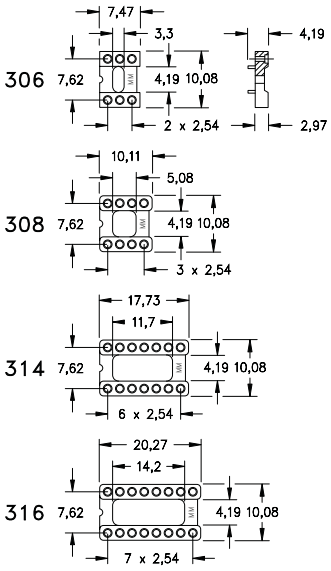

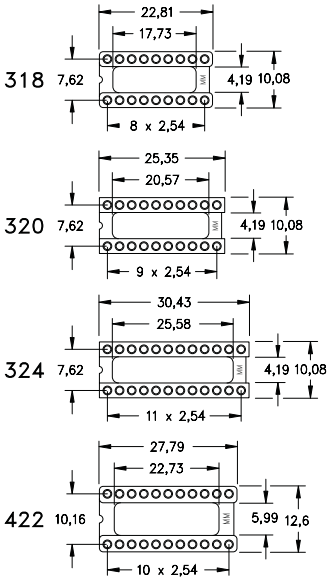

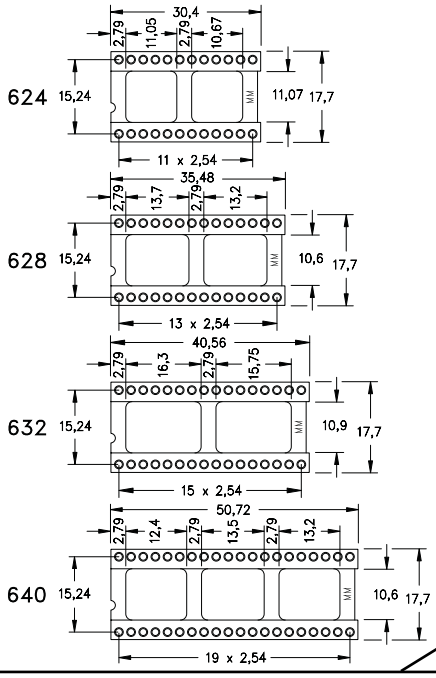

Automatic Insertion, Open Frame

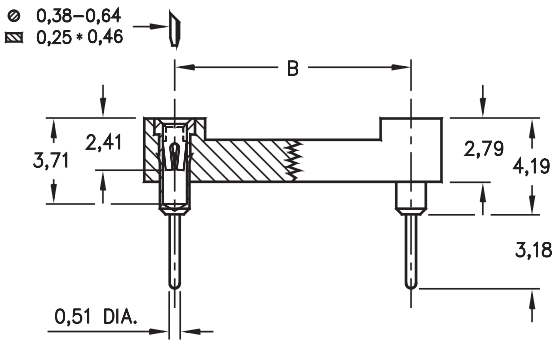

- All DIP sockets accept 0,38 - 0,64 diameter & standard IC leads.
- Hi-Rel, 4-finger BeCu #30 contact is rated at 3 amps. See page 218 for details.
- Series 110 sockets use MM #1001 pins. See page 136 for details.
- Insulators are high temp. thermoplastic.

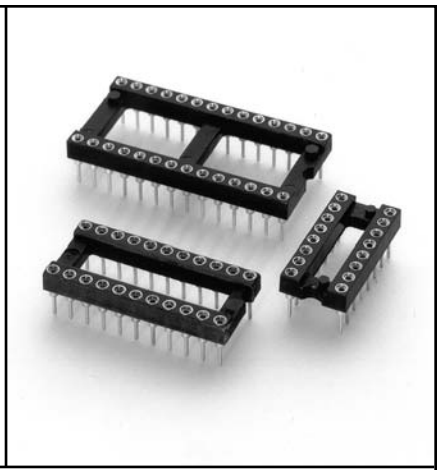

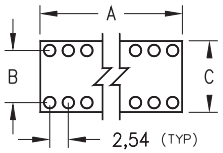

Ordering Information

Total number of pins	A	B	C	Quantity per tube	Ordering Information
10	12,6	5,08	7,6	40	110-XX-210-41-001000
4	5,0	7,62	10,1	102	110-XX-304-41-001000
6	7,6	7,62	10,1	67	110-XX-306-41-001000
8	10,1	7,62	10,1	50	110-XX-308-41-001000
10	12,6	7,62	10,1	40	110-XX-310-41-001000
14	17,7	7,62	10,1	28	110-XX-314-41-001000
16	20,3	7,62	10,1	25	110-XX-316-41-001000
18	22,8	7,62	10,1	22	110-XX-318-41-001000
20	25,3	7,62	10,1	20	110-XX-320-41-001000
22	27,8	7,62	10,1	18	110-XX-322-41-001000
24	30,4	7,62	10,1	16	110-XX-324-41-001000
28	35,5	7,62	10,1	14	110-XX-328-41-001000
20	25,4	10,16	12,7	20	110-XX-420-41-001000
22	27,8	10,16	12,7	18	110-XX-422-41-001000
24	30,4	10,16	12,7	16	110-XX-424-41-001000
28	35,5	10,16	12,7	14	110-XX-428-41-001000
32	40,6	10,16	12,7	12	110-XX-432-41-001000
24	30,4	15,24	17,7	16	110-XX-624-41-001000
28	35,5	15,24	17,7	14	110-XX-628-41-001000
32	40,6	15,24	17,7	12	110-XX-632-41-001000
36	45,7	15,24	17,7	11	110-XX-636-41-001000
40	50,8	15,24	17,7	10	110-XX-640-41-001000
42	53,3	15,24	17,7	9	110-XX-642-41-001000
48	60,9	15,24	17,7	8	110-XX-648-41-001000
50	63,5	15,24	17,7	8	110-XX-650-41-001000
52	66,0	15,24	17,7	7	110-XX-652-41-001000
50	63,5	22,86	25,3	8	110-XX-950-41-001000
52	66,0	22,86	25,3	7	110-XX-952-41-001000
64	81,2	22,86	25,3	6	110-XX-964-41-001000

RoHS 2002/95/EC

For RoHS compliance select ◇ plating code.

For Electrical, Mechanical & Enviromental Data, See pg. 4

XX=Plating Code See Below

SPECIFY PLATING CODE XX=	13◇	91	93	99	41◇	43◇	44◇
Sleeve (Pin)	0,25µm Au	5,08µm Sn/Pb	5,08µm Sn/Pb	5,08µm Sn/Pb	5,08µm Sn	5,08µm Sn	5,08µm Sn
Contact (Clip)	0,76µm Au	0,25µm Au	0,76µm Au	5,08µm Sn/Pb	0,25µm Au	0,76µm Au	5,08µm Sn

DUAL-IN-LINE SOCKETS
Long Solder Tail for Multilayer PC-Boards
Open Frame

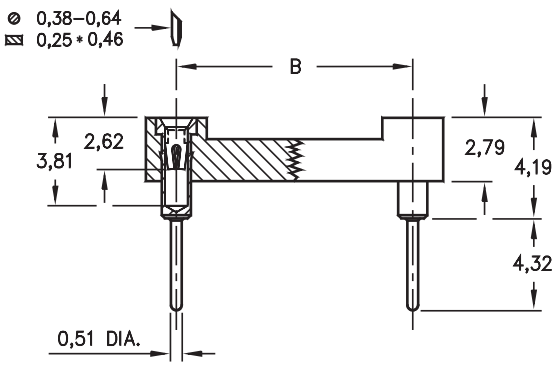

- DIP sockets with increased solder tail length of 4,32, allowing application on multi-layer PCBs up to 3,53mm thick. Other lengths available upon request.
- Hi-Rel, 4-finger BeCu #30 contact is rated at 3 amps. See page 218 for details.
- Series 111 use MM #0134 pins. See page 136 for details.
- Insulators are high temperature thermoplastic.

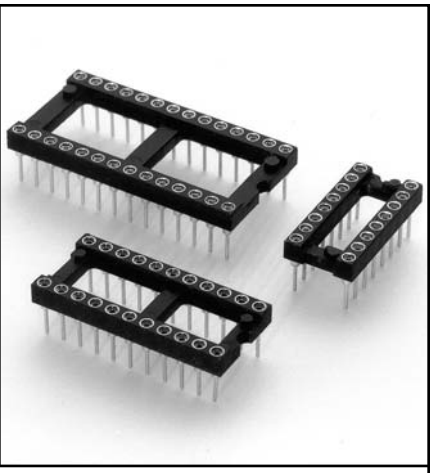

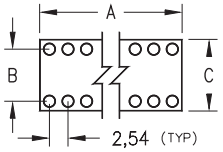

Ordering Information

Total number of pins	A	B	C	Quantity per tube	Ordering Information
10	12,6	5,08	7,6	40	111-XX-210-41-001000
4	5,0	7,62	10,1	102	111-XX-304-41-001000
6	7,6	7,62	10,1	67	111-XX-306-41-001000
8	10,1	7,62	10,1	50	111-XX-308-41-001000
10	12,6	7,62	10,1	40	111-XX-310-41-001000
14	17,7	7,62	10,1	28	111-XX-314-41-001000
16	20,3	7,62	10,1	25	111-XX-316-41-001000
18	22,8	7,62	10,1	22	111-XX-318-41-001000
20	25,3	7,62	10,1	20	111-XX-320-41-001000
22	27,8	7,62	10,1	18	111-XX-322-41-001000
24	30,4	7,62	10,1	16	111-XX-324-41-001000
28	35,5	7,62	10,1	14	111-XX-328-41-001000
20	25,4	10,16	12,7	20	111-XX-420-41-001000
22	27,8	10,16	12,7	18	111-XX-422-41-001000
24	30,4	10,16	12,7	16	111-XX-424-41-001000
28	35,5	10,16	12,7	14	111-XX-428-41-001000
32	40,6	10,16	12,7	12	111-XX-432-41-001000
24	30,4	15,24	17,7	16	111-XX-624-41-001000
28	35,5	15,24	17,7	14	111-XX-628-41-001000
32	40,6	15,24	17,7	12	111-XX-632-41-001000
36	45,7	15,24	17,7	11	111-XX-636-41-001000
40	50,8	15,24	17,7	10	111-XX-640-41-001000
42	53,3	15,24	17,7	9	111-XX-642-41-001000
48	60,9	15,24	17,7	8	111-XX-648-41-001000
50	63,5	15,24	17,7	8	111-XX-650-41-001000
52	66,0	15,24	17,7	7	111-XX-652-41-001000
50	63,5	22,86	25,3	8	111-XX-950-41-001000
52	66,0	22,86	25,3	7	111-XX-952-41-001000
64	81,2	22,86	25,3	6	111-XX-964-41-001000

RoHS 2002/95/EC

For RoHS compliance select ◇ plating code.

For Electrical, Mechanical & Enviromental Data, See pg. 4

XX=Plating Code See Below

SPECIFY PLATING CODE XX=			93			43◇	
Sleeve (Pin)			5,08µm Sn/Pb			5,08µm Sn	
Contact (Clip)			0,76µm Au			0,76µm Au	

DUAL-IN-LINE SOCKETS
Very Low Profile
Open Frame

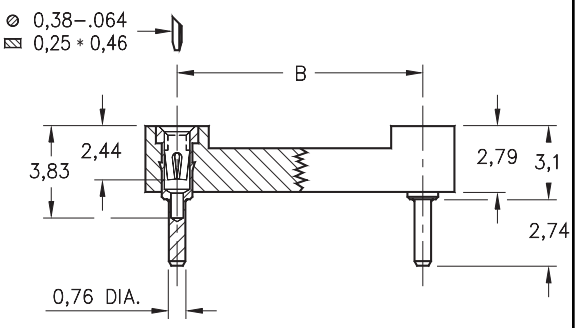

- Low profile DIP socket, sits only 3,1mm above the PCB.
- Hi-Rel, 4-finger BeCu #30 contact is rated at 3 amps. See page 218 for details.
- Series 115 use MM #0501 pins. See page 133 for details.
- Insulators are high temperature thermoplastic.

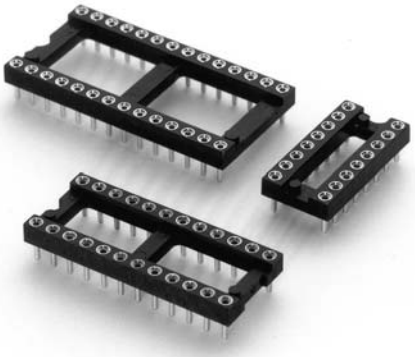

Ordering Information

Total number of pins	A	B	C	Quantity per tube	Ordering Information
10	12,6	5,08	7,6	41	115-XX-210-41-001000
4	5,0	7,62	10,1	102	115-XX-304-41-001000
6	7,6	7,62	10,1	67	115-XX-306-41-001000
8	10,1	7,62	10,1	50	115-XX-308-41-001000
10	12,6	7,62	10,1	40	115-XX-310-41-001000
14	17,7	7,62	10,1	28	115-XX-314-41-001000
16	20,3	7,62	10,1	25	115-XX-316-41-001000
18	22,8	7,62	10,1	22	115-XX-318-41-001000
20	25,3	7,62	10,1	20	115-XX-320-41-001000
22	27,8	7,62	10,1	18	115-XX-322-41-001000
24	30,4	7,62	10,1	16	115-XX-324-41-001000
28	35,5	7,62	10,1	14	115-XX-328-41-001000
20	25,4	10,16	12,7	20	115-XX-420-41-001000
22	27,8	10,16	12,7	18	115-XX-422-41-001000
24	30,4	10,16	12,7	16	115-XX-424-41-001000
28	35,5	10,16	12,7	14	115-XX-428-41-001000
32	40,6	10,16	12,7	12	115-XX-432-41-001000
24	30,4	15,24	17,7	16	115-XX-624-41-001000
28	35,5	15,24	17,7	14	115-XX-628-41-001000
32	40,6	15,24	17,7	12	115-XX-632-41-001000
36	45,7	15,24	17,7	11	115-XX-636-41-001000
40	50,8	15,24	17,7	10	115-XX-640-41-001000
42	53,3	15,24	17,7	9	115-XX-642-41-001000
48	60,9	15,24	17,7	8	115-XX-648-41-001000
50	63,5	15,24	17,7	8	115-XX-650-41-001000
52	66,0	15,24	17,7	7	115-XX-652-41-001000
50	63,5	22,86	25,3	8	115-XX-950-41-001000
52	66,0	22,86	25,3	7	115-XX-952-41-001000
64	81,2	22,86	25,3	6	115-XX-964-41-001000

RoHS 2002/95/EC

For RoHS compliance select ◇ plating code.

For Electrical, Mechanical & Enviromental Data, See pg. 4

XX=Plating Code See Below

SPECIFY PLATING CODE XX=			93			43◇	
Sleeve (Pin)			5,08µm Sn/Pb			5,08µm Sn	
Contact (Clip)			0,76µm Au			0,76µm Au	

DUAL-IN-LINE SOCKETS
Ultra Low Profile
Open Frame

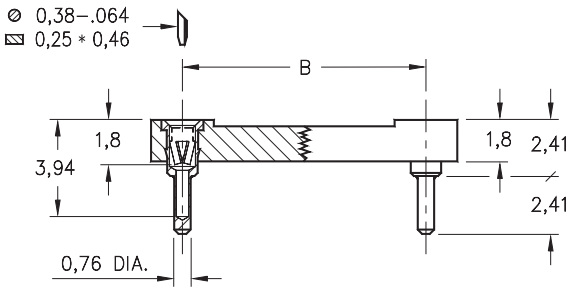

- Our lowest profile DIP socket with an above PCB height of only 2,41mm.
- Special short Hi-Rel, 4-finger BeCu #12 contact is rated at 3 amps. See page 218 for details.
- Series 115 use MM #1534 pins. See page 132 for details.
- Insulators are high temperature thermoplastic.

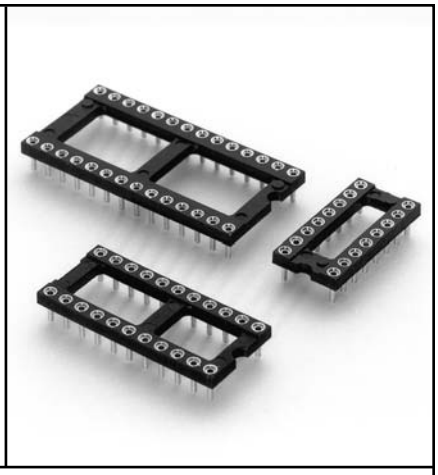

Ordering Information

Total number of pins	A	B	C	Quantity per tube	
6	7,6	7,62	10,1	68	115-XX-306-41-003000
8	10,1	7,62	10,1	50	115-XX-308-41-003000
14	17,7	7,62	10,1	28	115-XX-314-41-003000
16	20,3	7,62	10,1	25	115-XX-316-41-003000
18	22,8	7,62	10,1	22	115-XX-318-41-003000
20	25,3	7,62	10,1	20	115-XX-320-41-003000
22	27,8	7,62	10,1	18	115-XX-322-41-003000
24	30,4	7,62	10,1	16	115-XX-324-41-003000
28	35,5	7,62	10,1	14	115-XX-328-41-003000
20	25,4	10,16	12,7	20	115-XX-420-41-003000
22	27,8	10,16	12,7	18	115-XX-422-41-003000
24	30,4	10,16	12,7	16	115-XX-424-41-003000
28	35,5	10,16	12,7	14	115-XX-428-41-003000
24	30,4	15,24	17,7	16	115-XX-624-41-003000
28	35,5	15,24	17,7	14	115-XX-628-41-003000
32	40,6	15,24	17,7	12	115-XX-632-41-003000
36	45,7	15,24	17,7	11	115-XX-636-41-003000
40	50,8	15,24	17,7	10	115-XX-640-41-003000
48	60,9	15,24	17,7	8	115-XX-648-41-003000
50	63,5	15,24	17,7	8	115-XX-650-41-003000

RoHS 2002/95/EC

For RoHS compliance select ◇ plating code.

For Electrical, Mechanical & Enviromental Data, See pg. 4

XX=Plating Code See Below

SPECIFY PLATING CODE XX=			93			43◇	44◇
Sleeve (Pin)			5,08µm Sn/Pb			5,08µm Sn	5,08µm Sn
Contact (Clip)			0,76µm Au			0,76µm Au	5,08µm Sn

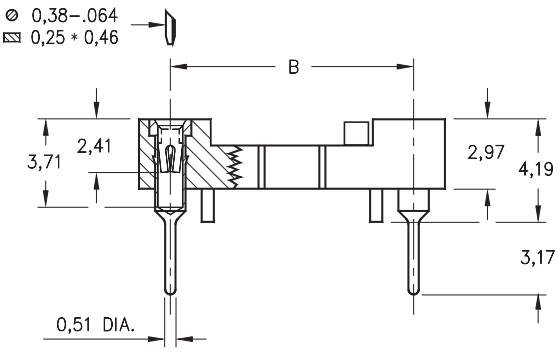

- High temperature thermo-plastic insulator with standoffs is compatible with standard automatic insertion equipment.
- Soft copper alloy machined pins allows clinching. Chamfered contact entry allows for ease of IC insertion without bent leads.
- Hi-Rel, 4-finger BeCu #30 contact is rated at 3 amps. See page 218 for details.
- Series 110 use MM #1005 pins. See page 137 for details.

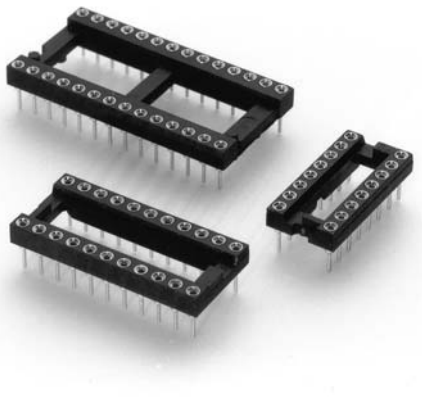

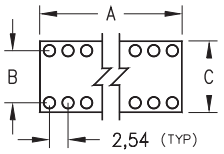

Ordering Information

Total number of pins	A	B	C	Quantity per tube	Ordering Information
6	7,6	7,62	10,1	67	110-XX-306-41-605000
8	10,1	7,62	10,1	50	110-XX-308-41-605000
14	17,7	7,62	10,1	28	110-XX-314-41-605000
16	20,3	7,62	10,1	25	110-XX-316-41-605000
18	22,8	7,62	10,1	22	110-XX-318-41-605000
20	25,3	7,62	10,1	20	110-XX-320-41-605000
24	30,4	7,62	10,1	16	110-XX-324-41-605000
22	27,8	10,16	12,7	18	110-XX-422-41-605000
24	30,4	15,24	17,7	16	110-XX-624-41-605000
28	35,5	15,24	17,7	14	110-XX-628-41-605000
32	40,6	15,24	17,7	12	110-XX-632-41-605000
40	50,8	15,24	17,7	10	110-XX-640-41-605000

RoHS 2002/95/EC

For RoHS compliance select ◇ plating code.

For Electrical, Mechanical & Enviromental Data, See pg. 4

XX=Plating Code See Below

SPECIFY PLATING CODE XX=			93			43◇	
Sleeve (Pin)			5,08µm Sn/Pb			5,08µm Sn	
Contact (Clip)			0,76µm Au			0,76µm Au	

DUAL-IN-LINE SOCKETS
Clinch Pin
Open Frame

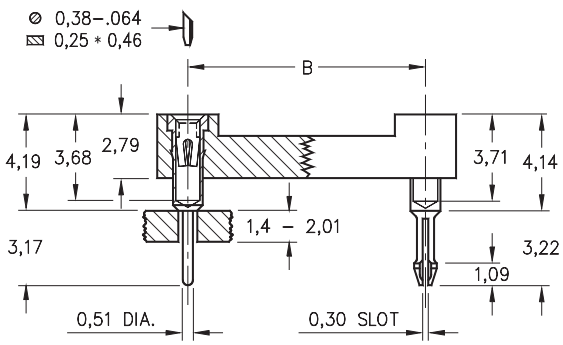

- Special lock-down feature prevents floating of socket during soldering. Open insulator with ladder construction.
- Sockets are XY stackable.
- Socket pins feature closed end construction eliminating any solder wicking problems.
- Series 101 use MM #1001 & MM #0156 pins. See page 136 for details.
- Insulators are high temperature thermoplastic.

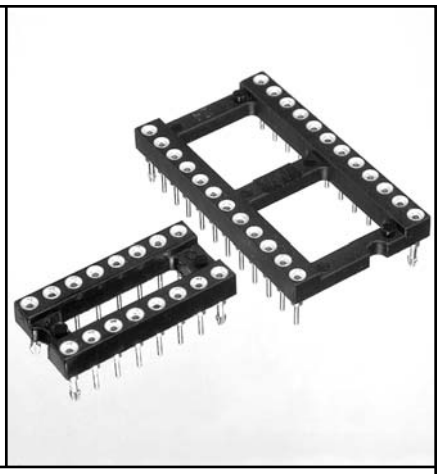

Ordering Information

Total number of pins	A	B	C	Quantity per tube	Ordering Information
6	7,6	7,62	10,1	67	101-93-306-41-56X000
8	10,1	7,62	10,1	50	101-93-308-41-56X000
14	17,7	7,62	10,1	28	101-93-314-41-56X000
16	20,3	7,62	10,1	25	101-93-316-41-56X000
18	22,8	7,62	10,1	22	101-93-318-41-56X000
20	25,3	7,62	10,1	20	101-93-320-41-56X000
24	30,4	7,62	10,1	16	101-93-324-41-56X000
28	35,5	7,62	10,1	14	101-93-328-41-56X000
22	27,8	10,16	12,7	18	101-93-422-41-56X000
24	30,4	15,24	17,7	16	101-93-624-41-56X000
28	35,5	15,24	17,7	14	101-93-628-41-56X000
32	40,6	15,24	17,7	12	101-93-632-41-56X000
40	50,8	15,24	17,7	10	101-93-640-41-56X000
48	60,9	15,24	17,7	8	101-93-648-41-56X000
64	81,2	22,86	25,3	6	101-93-964-41-56X000

Clinch Pin
Two Opposite Corner Pins **X = 0**
Four Corner Pins **X = 8**

RoHS 2002/95/EC

For Electrical, Mechanical & Enviromental Data, See pg. 4

For RoHS compliance select ◇ plating code.

PLATING CODE =			93				
Sleeve (Pin)			5,08µm Sn/Pb				
Contact (Clip)			0,76µm Au				

DUAL-IN-LINE SOCKETS
Solderless Press-Fit
Open Frame

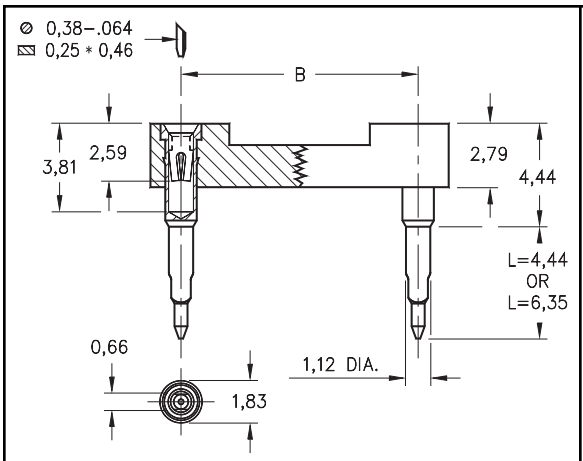

- Designed for solderless press-fit into plated thru-holes.
- Pin lengths are suitable for 1,57 and 2,36 - 3,17 thick panels.
- Required plated thru-hole is 0,91 - 1,04. Use a 1.1mm drill prior to plating.
- Series 104 use MM #0477 or MM #0478 pins with a BeCu #30 contact, rated at 3 amps. See page 133 for details.
- Insulators are high temperature thermoplastic.

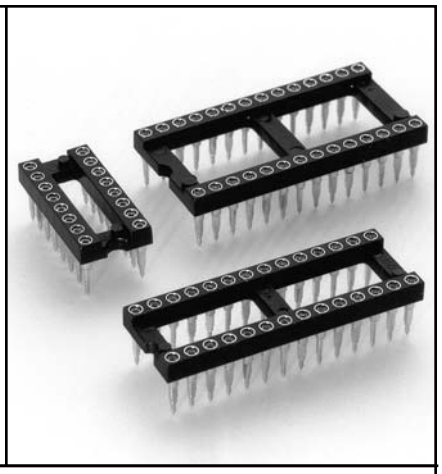

Ordering Information

Total number of pins	A	B	C	Quantity per tube	L = 4,44 (for 1,57 thick panel)	L = 6,35 (for 3,17 thick panel)
10	12,6	5,08	7,6	40	104-13-210-41-770000	104-13-210-41-780000
4	5,0	7,62	10,1	102	104-13-304-41-770000	104-13-304-41-780000
6	7,6	7,62	10,1	67	104-13-306-41-770000	104-13-306-41-780000
8	10,1	7,62	10,1	50	104-13-308-41-770000	104-13-308-41-780000
10	12,6	7,62	10,1	40	104-13-310-41-770000	104-13-310-41-780000
14	17,7	7,62	10,1	28	104-13-314-41-770000	104-13-314-41-780000
16	20,3	7,62	10,1	25	104-13-316-41-770000	104-13-316-41-780000
18	22,8	7,62	10,1	22	104-13-318-41-770000	104-13-318-41-780000
20	25,3	7,62	10,1	20	104-13-320-41-770000	104-13-320-41-780000
22	27,8	7,62	10,1	18	104-13-322-41-770000	104-13-322-41-780000
24	30,4	7,62	10,1	16	104-13-324-41-770000	104-13-324-41-780000
28	35,5	7,62	10,1	14	104-13-328-41-770000	104-13-328-41-780000
20	25,4	10,16	12,7	20	104-13-420-41-770000	104-13-420-41-780000
22	27,8	10,16	12,7	18	104-13-422-41-770000	104-13-422-41-780000
24	30,4	10,16	12,7	16	104-13-424-41-770000	104-13-424-41-780000
28	35,5	10,16	12,7	14	104-13-428-41-770000	104-13-428-41-780000
32	40,6	10,16	12,7	12	104-13-432-41-770000	104-13-432-41-780000
24	30,4	15,24	17,7	16	104-13-624-41-770000	104-13-624-41-780000
28	35,5	15,24	17,7	14	104-13-628-41-770000	104-13-628-41-780000
32	40,6	15,24	17,7	12	104-13-632-41-770000	104-13-632-41-780000
36	45,7	15,24	17,7	11	104-13-636-41-770000	104-13-636-41-780000
40	50,8	15,24	17,7	10	104-13-640-41-770000	104-13-640-41-780000
42	53,3	15,24	17,7	9	104-13-642-41-770000	104-13-642-41-780000
48	60,9	15,24	17,7	8	104-13-648-41-770000	104-13-648-41-780000
50	63,5	15,24	17,7	8	104-13-650-41-770000	104-13-650-41-780000
52	66,0	15,24	17,7	7	104-13-652-41-770000	104-13-652-41-780000
50	63,5	22,86	25,3	8	104-13-950-41-770000	104-13-950-41-780000
52	66,0	22,86	25,3	7	104-13-952-41-770000	104-13-952-41-780000
64	81,2	22,86	25,3	6	104-13-964-41-770000	104-13-964-41-780000

RoHS 2002/95/EC

For RoHS compliance select ◇ plating code.

For Electrical, Mechanical & Enviromental Data, See pg. 4

PLATING CODE XX=	13◇
Sleeve (Pin)	0,25µm Au
Contact (Clip)	0,76µm Au

DUAL-IN-LINE SOCKETS
Solderless Press-Fit, Compliant Tail
Open Frame

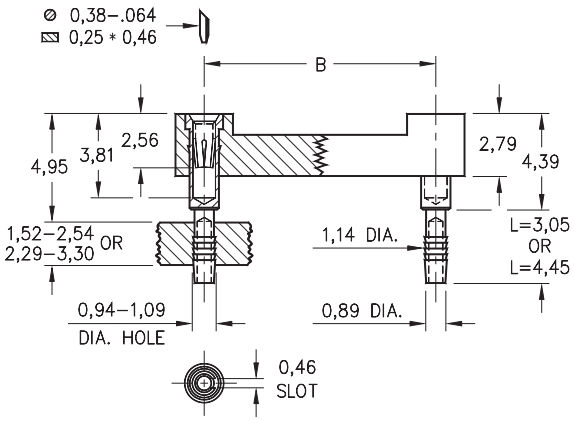

- Unique compliant tail pins conform to 1,02±0,76 finished hole diameter without stressing inner layers.
- Two tails lengths are offered for 1,52 - 2,54 and 2,29 - 3,30 thick panels.
- Series 146 use MM #4612 or MM #4613 pins with a BeCu #30 contact, rated at 3 amps. See page 133 for details.
- Insulators are high temperature thermoplastic.

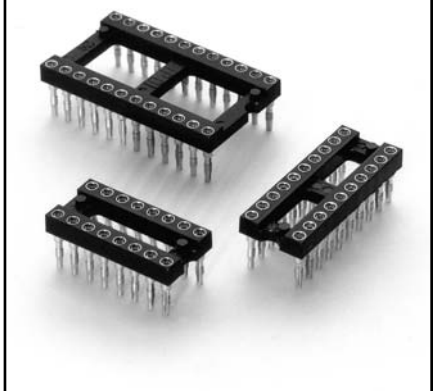

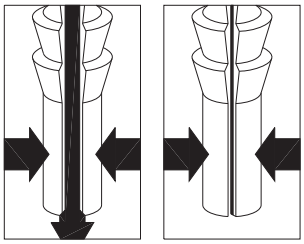

APPLICATION OF COMPLIANT TAIL PINS

Mill-Max's patented* compliant tail features precision-machined pins that are hollow and slotted to conform to a 1,02 ± 0,76 diameter PTH. As the pin is inserted, the slot compresses to fit the PTH, thus avoiding damage (see illustration at left). The pin's tail has fine serrations that form a perfect "gas tight" connection that doesn't require soldering. And since the pin doesn't damage the hole, compliant tail sockets and connectors can be easily replaced.
*Patent No. 4,799,904.

Ordering Information

Total number of pins	A	B	C	Quantity per tube	L = 3,05mm (for 1,52 - 2,54 thick panel)	L = 4,45mm (for 2,29 - 3,30 thick panel)
6	7,6	7,62	10,1	67	146-XX-306-41-012000	146-XX-306-41-013000
8	10,1	7,62	10,1	50	146-XX-308-41-012000	146-XX-308-41-013000
14	17,7	7,62	10,1	28	146-XX-314-41-012000	146-XX-314-41-013000
16	20,3	7,62	10,1	25	146-XX-316-41-012000	146-XX-316-41-013000
18	22,8	7,62	10,1	22	146-XX-318-41-012000	146-XX-318-41-013000
20	25,3	7,62	10,1	20	146-XX-320-41-012000	146-XX-320-41-013000
24	30,4	7,62	10,1	16	146-XX-324-41-012000	146-XX-324-41-013000
22	27,8	10,16	12,7	18	146-XX-422-41-012000	146-XX-422-41-013000
24	30,4	15,24	17,7	16	146-XX-624-41-012000	146-XX-624-41-013000
28	35,5	15,24	17,7	14	146-XX-624-41-012000	146-XX-624-41-013000
32	40,6	15,24	17,7	12	146-XX-624-41-012000	146-XX-624-41-013000
40	50,8	15,24	17,7	10	146-XX-624-41-012000	146-XX-624-41-013000

RoHS 2002/95/EC

For RoHS compliance select ◇ plating code.

For Electrical, Mechanical & Enviromental Data, See pg. 4

XX=Plating Code See Below

SPECIFY PLATING CODE XX=			93			43◇	
Sleeve (Pin)			5,08µm Sn/Pb			5,08µm Sn	
Contact (Clip)			0,76µm Au			0,76µm Au	

DUAL-IN-LINE SOCKETS
With Integral Decoupling Capacitor
Open Frame

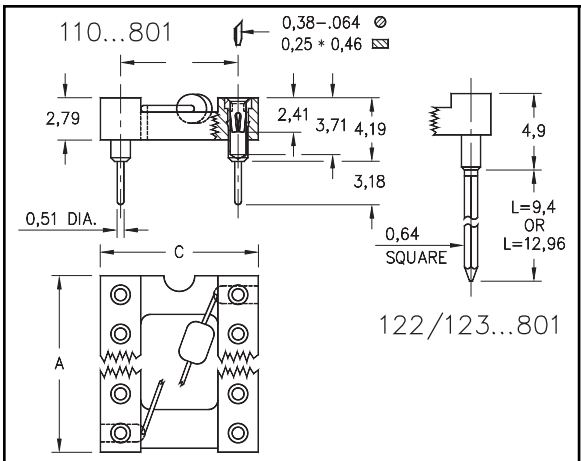

- Low profile DIP sockets with integral decoupling capacitor: .1µ F 20%-50V multi-layer ceramic epoxy encapsulated. Temp. range: -25° C to +85° C.
- Hi-Rel, 4-finger BeCu #30 contact is rated at 3 amps. See page 218 for details.
- Series 110, 122 and 123 use MM #1001, #0088 or #0089 pins. See pages 136 and 166 for details.
- Insulators are high temperature thermoplastic.

Ordering Information

Total number of pins	A	B	C	Quantity per tube	Solder Tail	2 Level Wrapost L = 9,4mm	3 Level Wrapost L = 12,96mm
14	17,7	7,62	10,1	28	110-XX-314-41-801000	122-XX-314-41-801000	123-XX-314-41-801000
16	20,3	7,62	10,1	25	110-XX-316-41-801000	122-XX-316-41-801000	123-XX-316-41-801000
18	22,8	7,62	10,1	22	110-XX-318-41-801000	122-XX-318-41-801000	123-XX-318-41-801000
20	25,3	7,62	10,1	20	110-XX-320-41-801000	122-XX-320-41-801000	123-XX-320-41-801000
22	27,8	7,62	10,1	18	110-XX-322-41-801000	122-XX-322-41-801000	123-XX-322-41-801000
24	30,4	7,62	10,1	16	110-XX-324-41-801000	122-XX-324-41-801000	123-XX-324-41-801000
28	35,5	7,62	10,1	14	110-XX-328-41-801000	122-XX-328-41-801000	123-XX-328-41-801000
22	27,8	10,16	12,7	18	110-XX-422-41-801000	122-XX-422-41-801000	123-XX-422-41-801000
24	30,4	15,24	17,7	16	110-XX-624-41-801000	122-XX-624-41-801000	123-XX-624-41-801000
28	35,5	15,24	17,7	14	110-XX-628-41-801000	122-XX-628-41-801000	123-XX-628-41-801000
32	40,6	15,24	17,7	12	110-XX-632-41-801000	122-XX-632-41-801000	123-XX-632-41-801000
40	50,8	15,24	17,7	10	110-XX-640-41-801000	122-XX-640-41-801000	123-XX-640-41-801000

For Electrical, Mechanical & Enviromental Data, See pg. 4

XX=Plating Code See Below

For RoHS compliance select ◇ plating code.

RoHS 2002/95/EC

SPECIFY PLATING CODE XX=	13◇		93			43◇	
Sleeve (Pin)	0,25µm Au		5,08µm Sn/Pb			5,08µm Sn	
Contact (Clip)	0,76µm Au		0,76µm Au			0,76µm Au	

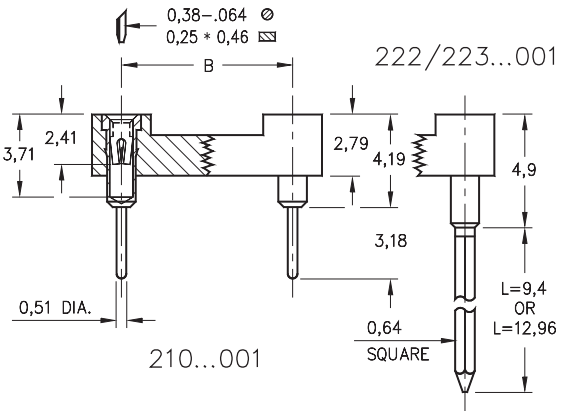

- Closed frame insulator withstands high mechanical impact.
- Available with standard solder pins, 2-level or 3-level wraposts.
- Hi-Rel, 4-finger BeCu #30 contact is rated at 3 amps. See page 218 for details.
- Series 210, 222 and 223 use MM #1001, #0088 or #0089 pins. See pages 136 and 166 for details.
- Insulators are high temperature thermoplastic.

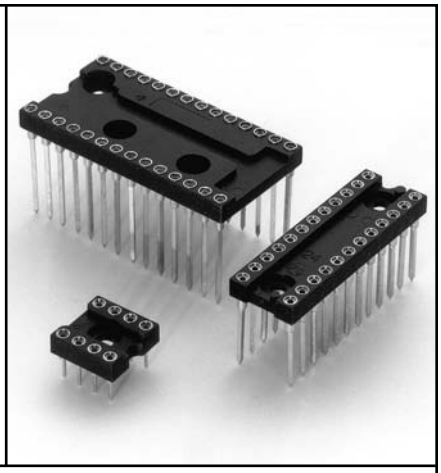

Ordering Information

Total number of pins	A	B	C	Quantity per tube	Solder Tail	2 Level Wrapost L = 9,4mm	3 Level Wrapost L = 12,96mm
6	7,6	7,62	10,1	67	210-XX-306-41-001000	222-XX-306-41-001000	223-XX-306-41-001000
8	10,1	7,62	10,1	50	210-XX-308-41-001000	222-XX-308-41-001000	223-XX-308-41-001000
10	12,6	7,62	10,1	40	210-XX-310-41-001000	222-XX-310-41-001000	223-XX-310-41-001000
14	17,7	7,62	10,1	28	210-XX-314-41-001000	222-XX-314-41-001000	223-XX-314-41-001000
16	20,3	7,62	10,1	25	210-XX-316-41-001000	222-XX-316-41-001000	223-XX-316-41-001000
18	22,8	7,62	10,1	22	210-XX-318-41-001000	222-XX-318-41-001000	223-XX-318-41-001000
20	25,3	7,62	10,1	20	210-XX-320-41-001000	222-XX-320-41-001000	223-XX-320-41-001000
22	27,8	7,62	10,1	18	210-XX-322-41-001000	222-XX-322-41-001000	223-XX-322-41-001000
24	30,4	7,62	10,1	16	210-XX-324-41-001000	222-XX-324-41-001000	223-XX-324-41-001000
22	27,8	10,16	12,7	18	210-XX-422-41-001000	222-XX-422-41-001000	223-XX-422-41-001000
24	30,4	10,16	12,7	16	210-XX-424-41-001000	222-XX-424-41-001000	223-XX-424-41-001000
24	30,4	15,24	17,7	16	210-XX-624-41-001000	222-XX-624-41-001000	223-XX-624-41-001000
28	35,5	15,24	17,7	14	210-XX-628-41-001000	222-XX-628-41-001000	223-XX-628-41-001000
32	40,6	15,24	17,7	12	210-XX-632-41-001000	222-XX-632-41-001000	223-XX-632-41-001000
36	45,7	15,24	17,7	11	210-XX-636-41-001000	222-XX-636-41-001000	223-XX-636-41-001000
40	50,8	15,24	17,7	10	210-XX-640-41-001000	222-XX-640-41-001000	223-XX-640-41-001000
64	81,2	22,86	25,3	6	210-XX-964-41-001000	222-XX-964-41-001000	223-XX-964-41-001000

For Electrical, Mechanical & Enviromental Data, See pg. 4

XX=Plating Code See Below

For RoHS compliance select ◇ plating code.

RoHS 2002/95/EC

SPECIFY PLATING CODE XX=	13◇		93	99		43◇	44◇
Sleeve (Pin)	0,25µm Au		5,08µm Sn/Pb	5,08µmSn/Pb		5,08µm Sn	5,08µm Sn
Contact (Clip)	0,76µm Au		0,76µm Au	5,08µm Sn/Pb		0,76µm Au	5,08µm Sn

MILITARY DUAL-IN-LINE SOCKETS
MIL-S-83734 APPROVED
Solder Tail, Open Frame

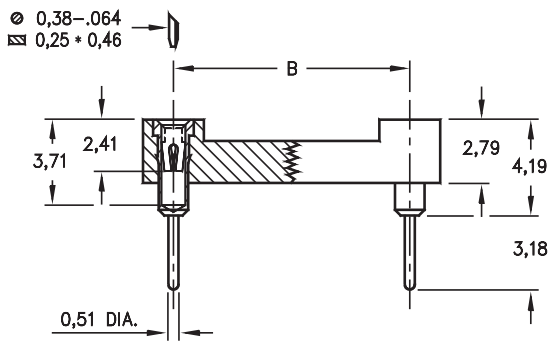

- Sockets are XY stackable.
- Machined outer sleeve with Hi-Rel, BeCu #30 inner contact.
- Socket pins feature closed-entry construction eliminating any solder/flux wicking problems.
- Packaged in tubes compatible with automatic insertion equipment.
- Series 110 use MM #1001 pins. See page 136 for details.
- Insulators are high temperature thermoplastic.

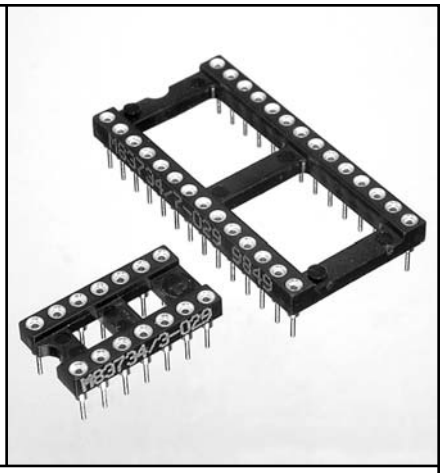

Ordering Information

Total number of pins	A	B	C	Quantity per tube	Mill-Max Part Number	Military Part Number
8	10,1	7,62	10,1	50	110-XX-308-41-530000	M83734/2-YYY
14	17,7	7,62	10,1	28	110-XX-314-41-530000	M83734/3-YYY
16	20,3	7,62	10,1	25	110-XX-316-41-530000	M83734/4-YYY
18	22,8	7,62	10,1	22	110-XX-318-41-530000	M83734/5-YYY
20	25,3	7,62	10,1	20	110-XX-320-41-530000	M83734/13-YYY
22	27,8	10,16	12,7	18	110-XX-422-41-530000	M83734/6-YYY
24	30,4	15,24	17,7	16	110-XX-624-41-530000	M83734/8-YYY
28	35,5	15,24	17,7	14	110-XX-628-41-530000	M83734/7-YYY
40	50,8	15,24	17,7	10	110-XX-640-41-530000	M83734/10-YYY
48	60,9	15,24	17,7	8	110-XX-648-41-530000	M83734/14-YYY
64	81,2	22,86	25,3	6	110-XX-964-41-530000	M83734/15-YYY

For Electrical, Mechanical & Enviromental Data, See pg. 4

XX=Plating Code See Below

SEE PAGE 35 FOR COMPLETE QPL

SPECIFY MILL-MAX PLATING CODE XX=	33	83	88
FOR MILITARY CODE YYY=	028	029	030
Sleeve (Pin)	0,76µm Au	7,62µm Sn/Pb	7,62µm Sn/Pb
Contact (Clip)	0,76µm Au	0,76µm Au	2,54µm Sn/Pb

MILITARY DUAL-IN-LINE SOCKETS
MIL-S-83734 APPROVED
Solder Tail, Closed Frame

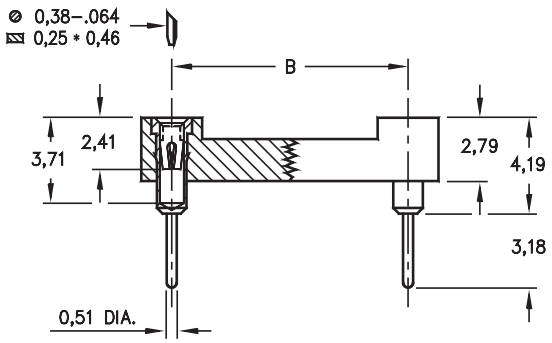

- Sockets are XY stackable.
- Machined outer sleeve with Hi-Rel, BeCu #30 inner contact.
- Socket pins feature closed-end construction eliminating any solder/flux wicking problems.
- Packaged in tubes compatible with automatic insertion equipment.
- Series 210 use MM #1001 pins. See page 136 for details.
- Insulators are high temperature thermoplastic.

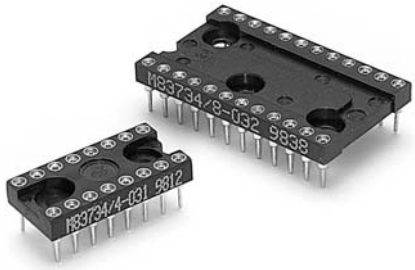

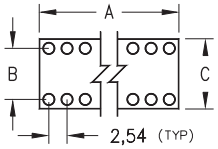

Ordering Information

Total number of pins	A	B	C	Quantity per tube	Mill-Max Part Number	Military Part Number
6	7,6	7,62	10,1	67	210-XX-306-41-101000	M83734/1-YYY
8	10,1	7,62	10,1	50	210-XX-308-41-101000	M83734/2-YYY
14	17,7	7,62	10,1	28	210-XX-314-41-101000	M83734/3-YYY
16	20,3	7,62	10,1	25	210-XX-316-41-101000	M83734/4-YYY
18	22,8	7,62	10,1	22	210-XX-318-41-101000	M83734/5-YYY
20	25,3	7,62	10,1	20	210-XX-320-41-101000	M83734/13-YYY
22	27,8	10,16	12,7	18	210-XX-422-41-101000	M83734/6-YYY
24	30,4	15,24	17,7	16	210-XX-624-41-101000	M83734/8-YYY
28	35,5	15,24	17,7	14	210-XX-628-41-101000	M83734/7-YYY
32	40,6	15,24	17,7	10	210-XX-632-41-101000	M83734/17-YYY
40	50,8	15,24	17,7	8	210-XX-640-41-101000	M83734/10-YYY
64	81,2	22,86	25,3	6	210-XX-964-41-101000	M83734/15-YYY

For Electrical, Mechanical & Enviromental Data, See pg. 4

XX=Plating Code See Below

SEE PAGE 35 FOR COMPLETE QPL

SPECIFY MILL-MAX PLATING CODE XX=	**33**	**83**	**88**
FOR MILITARY CODE YYY=	**031**	**032**	**033**
(6 PIN ONLY) YYY=	**025**	**026**	**027**
(32 PIN ONLY) YYY=	**013**	**014**	**015**
Sleeve (Pin)	0,76µm Au	7,62µm Sn/Pb	7,62µm Sn/Pb
Contact (Clip)	0,76µm Au	0,76µm Au	2,54µm Sn/Pb

MILITARY DUAL-IN-LINE SOCKETS
MIL-S-83734 APPROVED
3 Level Wrapost, Closed Frame

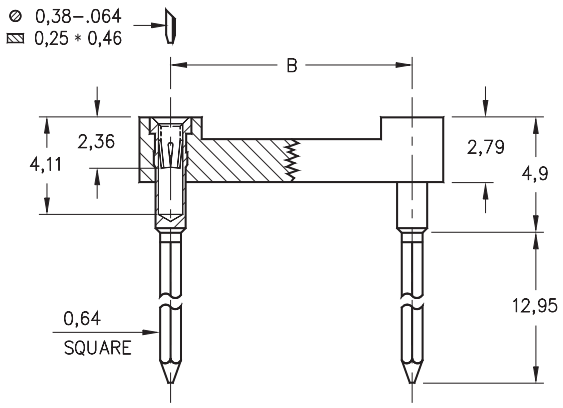

- Sockets are XY stackable.
- Machined outer sleeve with Hi-Rel, BeCu #30 inner contact.
- Socket pins feature closed-end construction eliminating any solder/flux wicking problems.
- Series 223 use MM #0038-3 pins. See page 166 for details.
- Insulators are high temperature thermoplastic.

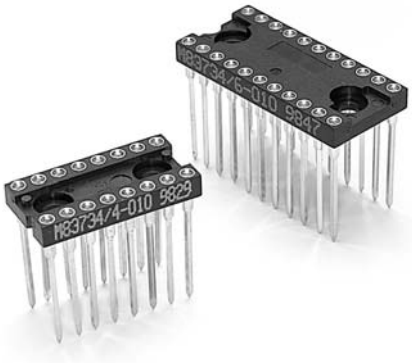

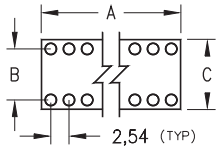

Ordering Information

Total number of pins	A	B	C	Quantity per tube	Mill-Max Part Number	Military Part Number
6	7,6	7,62	10,1	67	223-XX-306-41-101000	M83734/1-YYY
8	10,1	7,62	10,1	50	223-XX-308-41-101000	M83734/2-YYY
14	17,7	7,62	10,1	28	223-XX-314-41-101000	M83734/3-YYY
16	20,3	7,62	10,1	25	223-XX-316-41-101000	M83734/4-YYY
18	22,8	7,62	10,1	22	223-XX-318-41-101000	M83734/5-YYY
20	25,3	7,62	10,1	20	223-XX-320-41-101000	M83734/13-YYY
22	27,8	10,16	12,7	18	223-XX-422-41-101000	M83734/6-YYY
24	30,4	15,24	17,7	16	223-XX-624-41-101000	M83734/8-YYY
28	35,5	15,24	17,7	14	223-XX-628-41-101000	M83734/7-YYY
32	40,6	15,24	17,7	10	223-XX-632-41-101000	M83734/17-YYY
40	50,8	15,24	17,7	8	223-XX-640-41-101000	M83734/10-YYY
64	81,2	22,86	25,3	6	223-XX-964-41-101000	M83734/15-YYY

For Electrical, Mechanical & Enviromental Data, See pg. 4

XX=Plating Code See Below

SEE PAGE 35 FOR COMPLETE QPL

SPECIFY MILL-MAX PLATING CODE XX=	**33**	**83**	**88**
FOR MILITARY CODE YYY=	**010**	**011**	**012**
(32 PIN ONLY) YYY=	**007**	**008**	**009**
Sleeve (Pin)	0,76µm Au	7,62µm Sn/Pb	7,62µm Sn/Pb
Contact (Clip)	0,76µm Au	0,76µm Au	2,54µm Sn/Pb

DIP SOCKETS QUALIFIED
to MIL-S-83734

MIL SPEC #	MILL-MAX #
M83734/1-010	223-33-306-41-101000
M83734/1-011	223-83-306-41-101000
M83734/1-012	223-88-306-41-101000
M83734/1-025	210-33-306-41-101000
M83734/1-026	210-83-306-41-101000
M83734/1-027	210-88-306-41-101000
M83734/2-010	223-33-308-41-101000
M83734/2-011	223-83-308-41-101000
M83734/2-012	223-88-308-41-101000
M83734/2-028	110-33-308-41-530000
M83734/2-029	110-83-308-41-530000
M83734/2-030	110-88-308-41-530000
M83734/2-031	210-33-308-41-101000
M83734/2-032	210-83-308-41-101000
M83734/2-033	210-88-308-41-101000
M83734/3-010	223-33-314-41-101000
M83734/3-011	223-83-314-41-101000
M83734/3-012	223-88-314-41-101000
M83734/3-028	110-33-314-41-530000
M83734/3-029	110-83-314-41-530000
M83734/3-030	110-88-314-41-530000
M83734/3-031	210-33-314-41-101000
M83734/3-032	210-83-314-41-101000
M83734/3-033	210-88-314-41-101000
M83734/4-010	223-33-316-41-101000
M83734/4-011	223-83-316-41-101000
M83734/4-012	223-88-316-41-101000
M83734/4-028	110-33-316-41-530000
M83734/4-029	110-83-316-41-530000
M83734/4-030	110-88-316-41-530000
M83734/4-031	210-33-316-41-101000
M83734/4-032	210-83-316-41-101000
M83734/4-033	210-88-316-41-101000
M83734/5-010	223-33-318-41-101000
M83734/5-011	223-83-318-41-101000
M83734/5-012	223-88-318-41-101000
M83734/5-028	110-33-318-41-530000
M83734/5-029	110-83-318-41-530000
M83734/5-030	110-88-318-41-530000
M83734/5-031	210-33-318-41-101000
M83734/5-032	210-83-318-41-101000
M83734/5-033	210-88-318-41-101000
M83734/6-010	223-33-422-41-101000
M83734/6-011	223-83-422-41-101000
M83734/6-012	223-88-422-41-101000
M83734/6-028	110-33-422-41-530000
M83734/6-029	110-83-422-41-530000
M83734/6-030	110-88-422-41-530000
M83734/6-031	210-33-422-41-101000
M83734/6-032	210-83-422-41-101000
M83734/6-033	210-88-422-41-101000

MIL SPEC #	MILL-MAX #
M83734/7-010	223-33-628-41-101000
M83734/7-011	223-83-628-41-101000
M83734/7-012	223-88-628-41-101000
M83734/7-028	110-33-628-41-530000
M83734/7-029	110-83-628-41-530000
M83734/7-030	110-88-628-41-530000
M83734/7-031	210-33-628-41-101000
M83734/7-032	210-83-628-41-101000
M83734/7-033	210-88-628-41-101000
M83734/8-010	223-33-624-41-101000
M83734/8-011	223-83-624-41-101000
M83734/8-012	223-88-624-41-101000
M83734/8-028	110-33-624-41-530000
M83734/8-029	110-83-624-41-530000
M83734/8-030	110-88-624-41-530000
M83734/8-031	210-33-624-41-101000
M83734/8-032	210-83-624-41-101000
M83734/8-033	210-88-624-41-101000
M83734/9-010	223-33-636-41-101000
M83734/9-011	223-83-636-41-101000
M83734/9-012	223-88-636-41-101000
M83734/9-031	210-33-636-41-101000
M83734/9-032	210-83-636-41-101000
M83734/9-033	210-88-636-41-101000
M83734/10-010	223-33-640-41-101000
M83734/10-011	223-83-640-41-101000
M83734/10-012	223-88-640-41-101000
M83734/10-028	110-33-640-41-530000
M83734/10-029	110-83-640-41-530000
M83734/10-030	110-88-640-41-530000
M83734/10-031	210-33-640-41-101000
M83734/10-032	210-83-640-41-101000
M83734/10-033	210-88-640-41-101000
M83734/13-010	223-33-320-41-101000
M83734/13-011	223-83-320-41-101000
M83734/13-012	223-88-320-41-101000
M83734/13-028	110-33-320-41-530000
M83734/13-029	110-83-320-41-530000
M83734/13-030	110-88-320-41-530000
M83734/13-031	210-33-320-41-101000
M83734/13-032	210-83-320-41-101000
M83734/13-033	210-88-320-41-101000
M83734/14-028	110-33-648-41-530000
M83734/14-029	110-83-648-41-530000
M83734/14-030	110-88-648-41-530000
M83734/15-010	223-33-964-41-101000
M83734/15-011	223-83-964-41-101000
M83734/15-012	223-88-964-41-101000
M83734/15-028	110-33-964-41-530000
M83734/15-029	110-83-964-41-530000
M83734/15-030	110-88-964-41-530000
M83734/15-031	210-33-964-41-101000

MIL SPEC #	MILL-MAX #
M83734/15-032	210-83-964-41-101000
M83734/15-033	210-88-964-41-101000
M83734/17-001	221-33-632-41-101000
M83734/17-002	221-83-632-41-101000
M83734/17-003	221-88-632-41-101000
M83734/17-004	222-33-632-41-101000
M83734/17-005	222-83-632-41-101000
M83734/17-006	222-88-632-41-101000
M83734/17-007	223-33-632-41-101000
M83734/17-008	223-83-632-41-101000
M83734/17-009	223-88-632-41-101000
M83734/17-013	210-33-632-41-101000
M83734/17-014	210-83-632-41-101000
M83734/17-015	210-88-632-41-101000

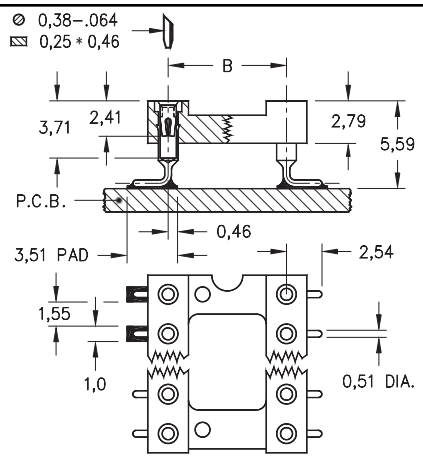

- For infra-red reflow and vapor phase soldering.
- Gull wing terminals for max. strength and easy in-circuit test.
- Hi-Rel, 4-finger BeCu #30 contact is rated at 3 amps. See page 218 for details.
- Series 110 use MM #1005 pins. See page 137 for details.
- Insulators are high temperature thermoplastic.

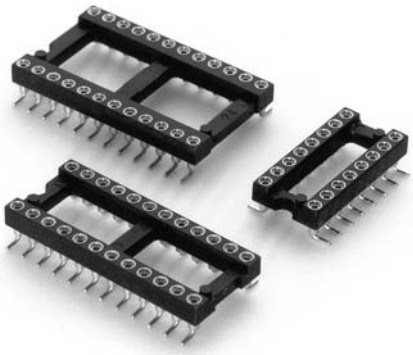

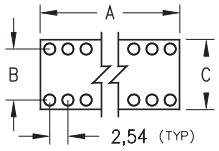

Ordering Information

Total number of pins	A	B	C	Quantity per tube	Ordering Information
10	12,6	5,08	7,6	40	110-XX-210-41-105000
4	5,0	7,62	10,1	102	110-XX-304-41-105000
6	7,6	7,62	10,1	67	110-XX-306-41-105000
8	10,1	7,62	10,1	50	110-XX-308-41-105000
10	12,6	7,62	10,1	40	110-XX-310-41-105000
14	17,7	7,62	10,1	28	110-XX-314-41-105000
16	20,3	7,62	10,1	25	110-XX-316-41-105000
18	22,8	7,62	10,1	22	110-XX-318-41-105000
20	25,3	7,62	10,1	20	110-XX-320-41-105000
22	27,8	7,62	10,1	18	110-XX-322-41-105000
24	30,4	7,62	10,1	16	110-XX-324-41-105000
28	35,5	7,62	10,1	14	110-XX-328-41-105000
20	25,4	10,16	12,7	20	110-XX-420-41-105000
22	27,8	10,16	12,7	18	110-XX-422-41-105000
24	30,4	10,16	12,7	16	110-XX-424-41-105000
28	35,5	10,16	12,7	14	110-XX-428-41-105000
32	40,6	10,16	12,7	12	110-XX-432-41-105000
24	30,4	15,24	17,7	32	110-XX-624-41-105000
28	35,5	15,24	17,7	28	110-XX-628-41-105000
32	40,6	15,24	17,7	24	110-XX-632-41-105000
36	45,7	15,24	17,7	22	110-XX-636-41-105000
40	50,8	15,24	17,7	20	110-XX-640-41-105000
42	53,3	15,24	17,7	18	110-XX-642-41-105000
48	60,9	15,24	17,7	16	110-XX-648-41-105000
50	63,5	15,24	17,7	16	110-XX-650-41-105000
52	66,0	15,24	17,7	14	110-XX-652-41-105000
50	63,5	22,86	25,3	16	110-XX-950-41-105000
52	66,0	22,86	25,3	14	110-XX-952-41-105000
64	81,2	22,86	25,3	12	110-XX-964-41-105000

RoHS 2002/95/EC

For RoHS compliance select ◇ plating code.

For Electrical, Mechanical & Enviromental Data, See pg. 4

XX=Plating Code See Below

SPECIFY PLATING CODE XX=			93			43◇	
Sleeve (Pin)			5,08µm Sn/Pb			5,08µm Sn	
Contact (Clip)			0,76µm Au			0,76µm Au	

DUAL-IN-LINE SOCKETS
Surface Mount, Auto Placement, Gull Wing
Closed Frame

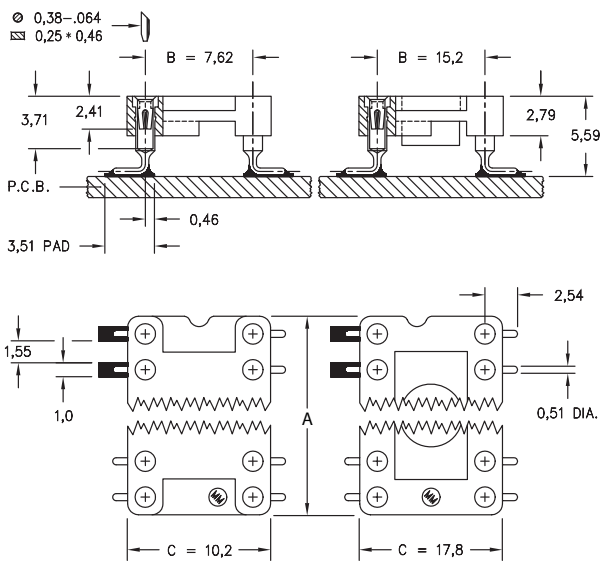

- Closed frame insulator is vision system compatible.
- High-temp Nylon 46 insulator is suitable for all forms of reflow soldering.
- Traditional gull-wing leads permit visual inspection of solder joints.
- Available packaged in tubes or on tape & reel per EIA-481.
- Uses Mill-Max #1005 pin. See page 137 for details.

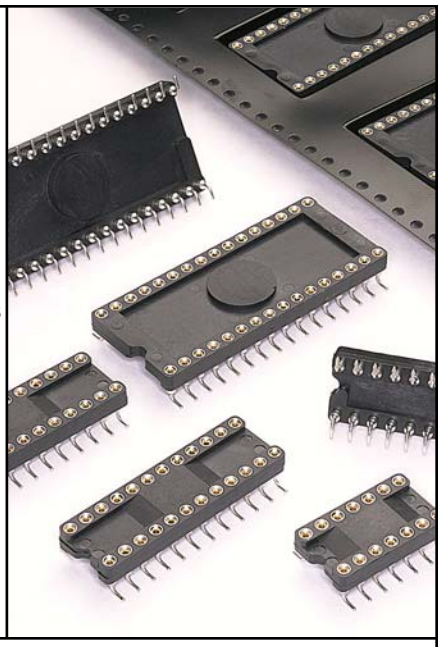

Ordering Information

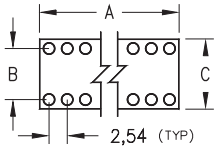

Total number of pins	A	B	C	QTY PER TUBE	TUBE PACKAGING	TAPE & REEL PACKAGING	TAPE WIDTH (mm)	QTY PER REEL
				VACUUM PAD TOP SURFACE ONLY				
6	7,6	7,62	10,1	67	210-XX-306-41-105000	210-XX-306-41-105799	16	400
8	10,1	7,62	10,1	50	210-XX-308-41-105000	210-XX-308-41-105799	24	400
14	17,7	7,62	10,1	28	210-XX-314-41-105000	210-XX-314-41-105799	32	400
16	20,3	7,62	10,1	25	210-XX-316-41-105000	210-XX-316-41-105799	32	400
18	22,8	7,62	10,1	22	210-XX-318-41-105000	210-XX-318-41-105799	44	400
20	25,3	7,62	10,1	20	210-XX-320-41-105000	210-XX-320-41-105799	44	400
24	30,4	7,62	10,1	16	210-XX-324-41-105000	210-XX-324-41-105799	44	400
				VACUUM PAD TOP AND BOTTOM				
24	30,4	15,24	17,7	16	210-XX-624-41-105000	210-XX-624-41-105799	44	250
28	35,5	15,24	17,7	14	210-XX-628-41-105000	210-XX-628-41-105799	56	250
32	40,6	15,24	17,7	12	210-XX-632-41-105000	210-XX-632-41-105799	56	250
40	50,8	15,24	17,7	10	210-XX-640-41-105000	NOT AVAILABLE		

For Electrical, Mechanical & Enviromental Data, See pg. 4

XX=Plating Code See Below

For RoHS compliance select ◇ plating code.

RoHS 2002/95/EC

SPECIFY PLATING CODE XX=	13◇		93			43◇	
Sleeve (Pin)	0,25µm Au		5,08µm Sn/Pb			5,08µm Sn	
Contact (Clip)	0,76µm Au		0,76µm Au			0,76µm Au	

DUAL-IN-LINE SOCKETS
Surface Mount, Stub Tail
Open Frame

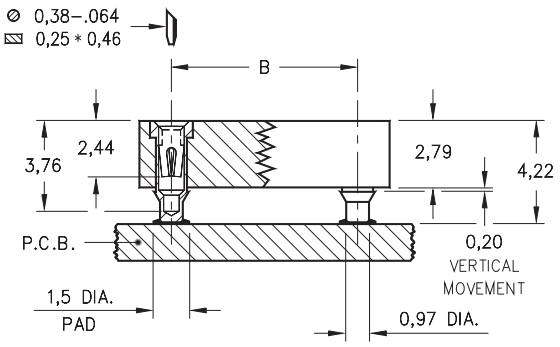

- Unique floating contacts compensate for the effects of unevenly dispensed solder paste.
- High temperature insulator can withstand infra-red reflow and vapor phase soldering.
- Hi-Rel, 4-finger BeCu #30 contact is rated at 3 amps. See page 218 for details.
- Series 114 use MM #1434 pins. See page 133 for details.

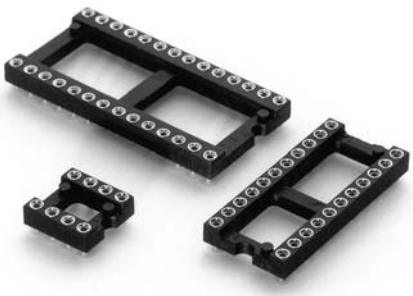

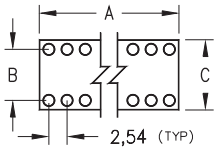

Ordering Information

Total number of pins	A	B	C	Quantity per tube	Ordering Information
10	12,6	5,08	7,6	41	114-XX-210-41-117000
4	5,0	7,62	10,1	100	114-XX-304-41-117000
6	7,6	7,62	10,1	67	114-XX-306-41-117000
8	10,1	7,62	10,1	50	114-XX-308-41-117000
10	12,6	7,62	10,1	40	114-XX-310-41-117000
14	17,7	7,62	10,1	28	114-XX-314-41-117000
16	20,3	7,62	10,1	25	114-XX-316-41-117000
18	22,8	7,62	10,1	22	114-XX-318-41-117000
20	25,3	7,62	10,1	20	114-XX-320-41-117000
22	27,8	7,62	10,1	18	114-XX-322-41-117000
24	30,4	7,62	10,1	16	114-XX-324-41-117000
28	35,5	7,62	10,1	14	114-XX-328-41-117000
20	25,4	10,16	12,7	20	114-XX-420-41-117000
22	27,8	10,16	12,7	18	114-XX-422-41-117000
24	30,4	10,16	12,7	16	114-XX-424-41-117000
28	35,5	10,16	12,7	14	114-XX-428-41-117000
32	40,6	10,16	12,7	12	114-XX-432-41-117000
24	30,4	15,24	17,7	16	114-XX-624-41-117000
28	35,5	15,24	17,7	14	114-XX-628-41-117000
32	40,6	15,24	17,7	12	114-XX-632-41-117000
36	45,7	15,24	17,7	11	114-XX-636-41-117000
40	50,8	15,24	17,7	10	114-XX-640-41-117000
42	53,3	15,24	17,7	9	114-XX-642-41-117000
48	60,9	15,24	17,7	8	114-XX-648-41-117000
50	63,5	15,24	17,7	8	114-XX-650-41-117000
52	66,0	15,24	17,7	7	114-XX-652-41-117000
50	63,5	22,86	25,3	8	114-XX-950-41-117000
52	66,0	22,86	25,3	7	114-XX-952-41-117000
64	81,2	22,86	25,3	6	114-XX-964-41-117000

RoHS 2002/95/EC

For RoHS compliance select ◇ plating code.

For Electrical, Mechanical & Enviromental Data, See pg. 4

XX=Plating Code See Below

SPECIFY PLATING CODE XX=			93			43◇	
Sleeve (Pin)			5,08µm Sn/Pb			5,08µm Sn	
Contact (Clip)			0,76µm Au			0,76µm Au	

DUAL-IN-LINE SOCKETS
Surface Mount, Stub Tail, with Alignment Pins for Hand Placement

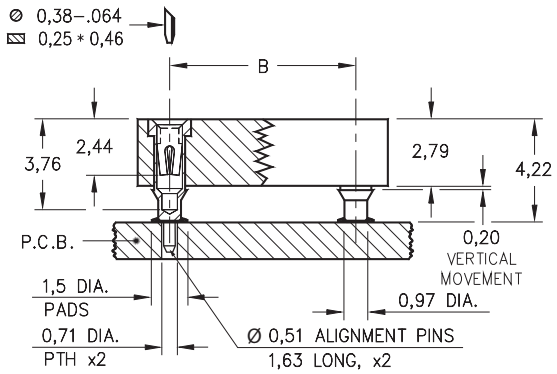

- Unique floating contacts compensate for the effects of unevenly dispensed solder paste.
- Two corner alignment pins (power & ground positions) permit manual placement.
- High temperature insulator can withstand infra-red reflow and vapor phase soldering.
- Hi-Rel, 4-finger BeCu #30 contact is rated at 3 amps. See page 218 for details.
- Series 113 use MM #1334 and #1434 pins. See pages 133 & 142.

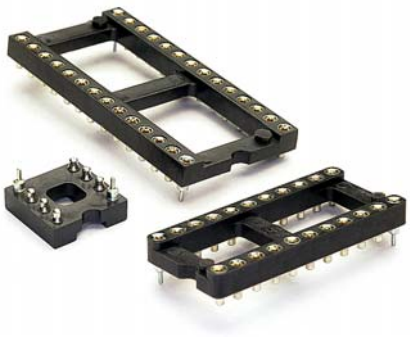

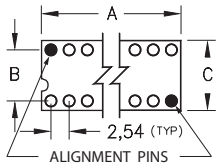

Ordering Information

Total number of pins	A	B	C	Quantity per tube	Ordering Information
10	12,6	5,08	7,6	41	113-XX-210-41-117000
4	5,0	7,62	10,1	100	113-XX-304-41-117000
6	7,6	7,62	10,1	67	113-XX-306-41-117000
8	10,1	7,62	10,1	50	113-XX-308-41-117000
10	12,6	7,62	10,1	40	113-XX-310-41-117000
14	17,7	7,62	10,1	28	113-XX-314-41-117000
16	20,3	7,62	10,1	25	113-XX-316-41-117000
18	22,8	7,62	10,1	22	113-XX-318-41-117000
20	25,3	7,62	10,1	20	113-XX-320-41-117000
22	27,8	7,62	10,1	18	113-XX-322-41-117000
24	30,4	7,62	10,1	16	113-XX-324-41-117000
28	35,5	7,62	10,1	14	113-XX-328-41-117000
20	25,4	10,16	12,7	20	113-XX-420-41-117000
22	27,8	10,16	12,7	18	113-XX-422-41-117000
24	30,4	10,16	12,7	16	113-XX-424-41-117000
28	35,5	10,16	12,7	14	113-XX-428-41-117000
32	40,6	10,16	12,7	12	113-XX-432-41-117000
24	30,4	15,24	17,7	16	113-XX-624-41-117000
28	35,5	15,24	17,7	14	113-XX-628-41-117000
32	40,6	15,24	17,7	12	113-XX-632-41-117000
36	45,7	15,24	17,7	11	113-XX-636-41-117000
40	50,8	15,24	17,7	10	113-XX-640-41-117000
42	53,3	15,24	17,7	9	113-XX-642-41-117000
48	60,9	15,24	17,7	8	113-XX-648-41-117000
50	63,5	15,24	17,7	8	113-XX-650-41-117000
52	66,0	15,24	17,7	7	113-XX-652-41-117000
50	63,5	22,86	25,3	8	113-XX-950-41-117000
52	66,0	22,86	25,3	7	113-XX-952-41-117000
64	81,2	22,86	25,3	6	113-XX-964-41-117000

RoHS 2002/95/EC

For RoHS compliance select ◇ plating code.

For Electrical, Mechanical & Enviromental Data, See pg. 4

XX=Plating Code See Below

SPECIFY PLATING CODE XX=	13◇		93			43◇	
Sleeve (Pin)	0,25µm Au		5,08µm Sn/Pb			5,08µm Sn	
Contact (Clip)	0,76µm Au		0,76µm Au			0,76µm Au	

DUAL-IN-LINE SOCKETS
Surface Mount, Auto Placement, Stub Tail
Closed Frame

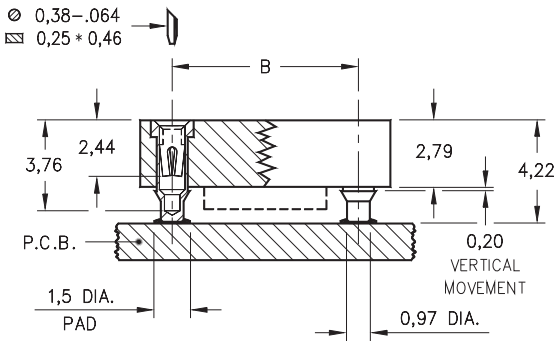

- Unique floating contacts compensate for the effects of unevenly screened solder paste.
- Available packaged in tubes or on tape & reel per EIA-481.
- High temp. Nylon 46 insulator, is suitable for infra-red & vapor phase soldering. Closed frame insulator is vision system compatible.
- Hi-Rel, 4-finger BeCu #30 contact is rated at 3 amps. See page 218 for details.
- Series 214 use MM #1434 pins. See page 133 for details.

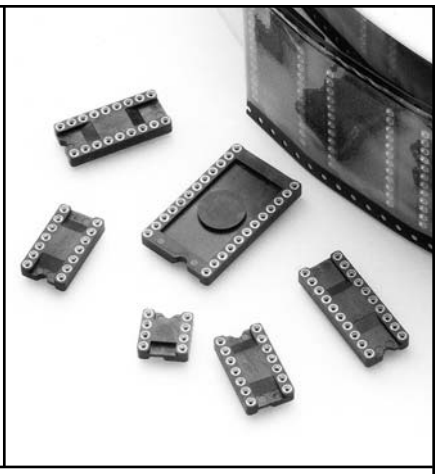

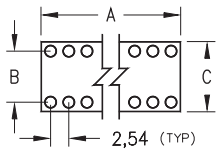

Ordering Information

Total number of pins	A	B	C	QTY PER TUBE	TUBE PACKAGING	TAPE & REEL PACKAGING	TAPE WIDTH (mm)	QTY PER REEL
				VACUUM PAD TOP SURFACE ONLY				
6	7,6	7,62	10,1	67	214-XX-306-01-670800	214-XX-306-01-670799	16	750
8	10,1	7,62	10,1	50	214-XX-308-01-670800	214-XX-308-01-670799	16	1000
14	17,7	7,62	10,1	28	214-XX-314-01-670800	214-XX-314-01-670799	32	750
16	20,3	7,62	10,1	25	214-XX-316-01-670800	214-XX-316-01-670799	32	750
18	22,8	7,62	10,1	22	214-XX-318-01-670800	214-XX-318-01-670799	44	750
20	25,3	7,62	10,1	20	214-XX-320-01-670800	214-XX-320-01-670799	44	750
				VACUUM PAD TOP AND BOTTOM				
24	30,4	15,24	17,7	16	214-XX-624-01-670800	214-XX-624-01-670799	44	400
28	35,5	15,24	17,7	14	214-XX-628-01-670800	214-XX-628-01-670799	56	400
32	40,6	15,24	17,7	12	214-XX-632-01-670800	214-XX-632-01-670799	56	400
40	50,8	15,24	17,7	10	214-XX-640-01-670800	NOT AVAILABLE		

For Electrical, Mechanical & Enviromental Data, See pg. 4

XX=Plating Code See Below

For RoHS compliance select ◇ plating code.

RoHS 2002/95/EC

SPECIFY PLATING CODE XX=				99			44◇
Sleeve (Pin)				5,08µm Sn/Pb			5,08µm Sn
Contact (Clip)				5,08µm Sn/Pb			5,08µm Sn

DUAL-IN-LINE SOCKETS
1 thru 4 Level Wrapost
Open Frame

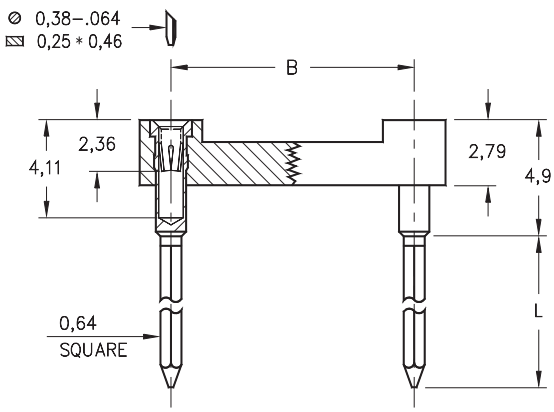

- Solderless wrapost terminals are firmly locked in the insulator body to withstand torque of a wrapping tool.
- Hi-Rel, 4-finger BeCu #30 contact is rated at 3 amps. See page 218 for details.
- Series 121, 122, 123 and 124 use MM #0040, #0086, #0088 and #0089 pins. See page 166 for details.
- Insulators are high temperature thermoplastic.

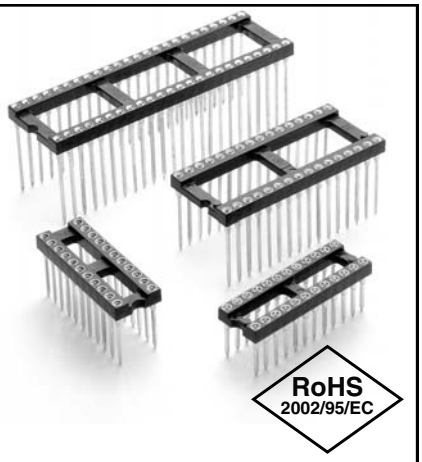

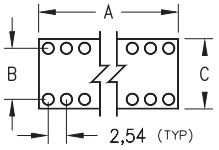

For Electrical, Mechanical & Enviromental Data, See pg. 4

Ordering Information

XX=Plating Code See Below

Total number of pins	A	B	C	Quantity per tube	1 Level Wrapost L = 6,6	2 Level Wrapost L = 9,4	3 Level Wrapost L = 12,95	4 Level Wrapost L = 16,0
10	12,6	5,08	7,6	40	121-XX-210-41-001000	122-XX-210-41-001000	123-XX-210-41-001000	124-XX-210-41-002000
								43 or 93 Plating Code ONLY
4	5,0	7,62	10,1	102	121-XX-304-41-001000	122-XX-304-41-001000	123-XX-304-41-001000	124-XX-304-41-002000
6	7,6	7,62	10,1	67	121-XX-306-41-001000	122-XX-306-41-001000	123-XX-306-41-001000	124-XX-306-41-002000
8	10,1	7,62	10,1	50	121-XX-308-41-001000	122-XX-308-41-001000	123-XX-308-41-001000	124-XX-308-41-002000
10	12,6	7,62	10,1	40	121-XX-310-41-001000	122-XX-310-41-001000	123-XX-310-41-001000	124-XX-310-41-002000
14	17,7	7,62	10,1	28	121-XX-314-41-001000	122-XX-314-41-001000	123-XX-314-41-001000	124-XX-314-41-002000
16	20,3	7,62	10,1	25	121-XX-316-41-001000	122-XX-316-41-001000	123-XX-316-41-001000	124-XX-316-41-002000
18	22,8	7,62	10,1	22	121-XX-318-41-001000	122-XX-318-41-001000	123-XX-318-41-001000	124-XX-318-41-002000
20	25,3	7,62	10,1	20	121-XX-320-41-001000	122-XX-320-41-001000	123-XX-320-41-001000	124-XX-320-41-002000
22	27,8	7,62	10,1	18	121-XX-322-41-001000	122-XX-322-41-001000	123-XX-322-41-001000	124-XX-322-41-002000
24	30,4	7,62	10,1	16	121-XX-324-41-001000	122-XX-324-41-001000	123-XX-324-41-001000	124-XX-324-41-002000
28	35,5	7,62	10,1	14	121-XX-328-41-001000	122-XX-328-41-001000	123-XX-328-41-001000	124-XX-328-41-002000
								43 or 93 Plating Code ONLY
20	25,4	10,16	12,7	20	121-XX-420-41-001000	122-XX-420-41-001000	123-XX-420-41-001000	124-XX-420-41-002000
22	27,8	10,16	12,7	18	121-XX-422-41-001000	122-XX-422-41-001000	123-XX-422-41-001000	124-XX-422-41-002000
24	30,4	10,16	12,7	16	121-XX-424-41-001000	122-XX-424-41-001000	123-XX-424-41-001000	124-XX-424-41-002000
28	35,5	10,16	12,7	14	121-XX-428-41-001000	122-XX-428-41-001000	123-XX-428-41-001000	124-XX-428-41-002000
32	40,6	10,16	12,7	12	121-XX-432-41-001000	122-XX-432-41-001000	123-XX-432-41-001000	124-XX-432-41-002000
								43 or 93 Plating Code ONLY
24	30,4	15,24	17,7	16	121-XX-624-41-001000	122-XX-624-41-001000	123-XX-624-41-001000	124-XX-624-41-002000
28	35,5	15,24	17,7	14	121-XX-628-41-001000	122-XX-628-41-001000	123-XX-628-41-001000	124-XX-628-41-002000
32	40,6	15,24	17,7	12	121-XX-632-41-001000	122-XX-632-41-001000	123-XX-632-41-001000	124-XX-632-41-002000
36	45,7	15,24	17,7	11	121-XX-636-41-001000	122-XX-636-41-001000	123-XX-636-41-001000	124-XX-636-41-002000
40	50,8	15,24	17,7	10	121-XX-640-41-001000	122-XX-640-41-001000	123-XX-640-41-001000	124-XX-640-41-002000
42	53,3	15,24	17,7	9	121-XX-642-41-001000	122-XX-642-41-001000	123-XX-642-41-001000	124-XX-642-41-002000
48	60,9	15,24	17,7	8	121-XX-648-41-001000	122-XX-648-41-001000	123-XX-648-41-001000	124-XX-648-41-002000
50	63,5	15,24	17,7	8	121-XX-650-41-001000	122-XX-650-41-001000	123-XX-650-41-001000	124-XX-650-41-002000
52	66,0	15,24	17,7	7	121-XX-652-41-001000	122-XX-652-41-001000	123-XX-652-41-001000	124-XX-652-41-002000
								43 or 93 Plating Code ONLY
50	63,5	22,86	25,3	8	121-XX-950-41-001000	122-XX-950-41-001000	123-XX-950-41-001000	124-XX-950-41-002000
52	66,0	22,86	25,3	7	121-XX-952-41-001000	122-XX-952-41-001000	123-XX-952-41-001000	124-XX-952-41-002000
64	81,2	22,86	25,3	6	121-XX-964-41-001000	122-XX-964-41-001000	123-XX-964-41-001000	124-XX-964-41-002000

SPECIFY PLATING CODE XX=	13◇		93		43◇
Sleeve (Pin)	0,25µm Au		200µm Sn/Pb		5,08µm Sn
Contact (Clip)	0,76µm Au		0,76µ Au		0,76µm Au

For RoHS compliance select ◇ plating code.

DUAL-IN-LINE SOCKETS
Pluggable Wrapost
Open Frame

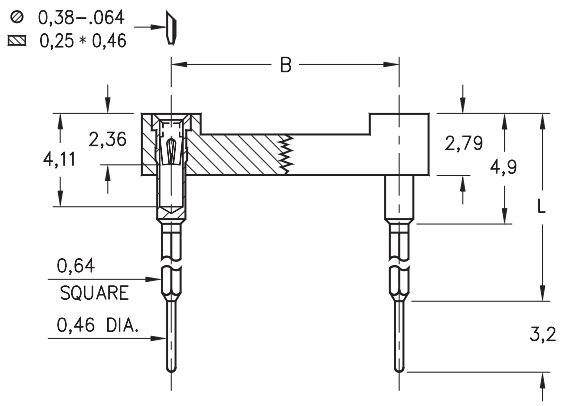

- Combines one through three level wrapost with pluggable solder tails.
- Suitable for use as an interconnect socket with intermediate wire wrapped connections.
- Hi-Rel, 4-finger BeCu #30 contact is rated at 3 amps. See page 218 for details.
- Series 126 use MM #2601, #2602 & #2603 pins. See page 167 for details.
- Insulators are high temperature thermoplastic.

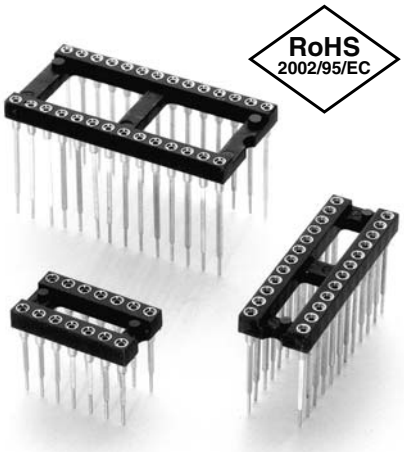

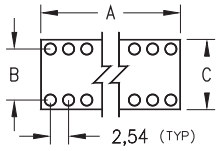

For Electrical, Mechanical & Enviromental Data, See pg. 4

Ordering Information

XX=Plating Code See Below

Total number of pins	A	B	C	Quantity per tube	L = 10,8 (1 level = 5,89)	L = 13,79 (2 level = 8,89)	L = 16,79 (3 level = 11,9)
10	12,6	5,08	7,6	40	126-XX-210-41-001000	126-XX-210-41-002000	126-XX-210-41-003000
4	5,0	7,62	10,1	102	126-XX-304-41-001000	126-XX-304-41-002000	126-XX-304-41-003000
6	7,6	7,62	10,1	67	126-XX-306-41-001000	126-XX-306-41-002000	126-XX-306-41-003000
8	10,1	7,62	10,1	50	126-XX-308-41-001000	126-XX-308-41-002000	126-XX-308-41-003000
10	12,6	7,62	10,1	40	126-XX-310-41-001000	126-XX-310-41-002000	126-XX-310-41-003000
14	17,7	7,62	10,1	28	126-XX-314-41-001000	126-XX-314-41-002000	126-XX-314-41-003000
16	20,3	7,62	10,1	25	126-XX-316-41-001000	126-XX-316-41-002000	126-XX-316-41-003000
18	22,8	7,62	10,1	22	126-XX-318-41-001000	126-XX-318-41-002000	126-XX-318-41-003000
20	25,3	7,62	10,1	20	126-XX-320-41-001000	126-XX-320-41-002000	126-XX-320-41-003000
22	27,8	7,62	10,1	18	126-XX-322-41-001000	126-XX-322-41-002000	126-XX-322-41-003000
24	30,4	7,62	10,1	16	126-XX-324-41-001000	126-XX-324-41-002000	126-XX-324-41-003000
28	35,5	7,62	10,1	14	126-XX-328-41-001000	126-XX-328-41-002000	126-XX-328-41-003000
20	25,4	10,16	12,7	20	126-XX-420-41-001000	126-XX-420-41-002000	126-XX-420-41-003000
22	27,8	10,16	12,7	18	126-XX-422-41-001000	126-XX-422-41-002000	126-XX-422-41-003000
24	30,4	10,16	12,7	16	126-XX-424-41-001000	126-XX-424-41-002000	126-XX-424-41-003000
28	35,5	10,16	12,7	14	126-XX-428-41-001000	126-XX-428-41-002000	126-XX-428-41-003000
32	40,6	10,16	12,7	12	126-XX-432-41-001000	126-XX-432-41-002000	126-XX-432-41-003000
24	30,4	15,24	17,7	16	126-XX-624-41-001000	126-XX-624-41-002000	126-XX-624-41-003000
28	35,5	15,24	17,7	14	126-XX-628-41-001000	126-XX-628-41-002000	126-XX-628-41-003000
32	40,6	15,24	17,7	12	126-XX-632-41-001000	126-XX-632-41-002000	126-XX-632-41-003000
36	45,7	15,24	17,7	11	126-XX-636-41-001000	126-XX-636-41-002000	126-XX-636-41-003000
40	50,8	15,24	17,7	10	126-XX-640-41-001000	126-XX-640-41-002000	126-XX-640-41-003000
42	53,3	15,24	17,7	9	126-XX-642-41-001000	126-XX-642-41-002000	126-XX-642-41-003000
48	60,9	15,24	17,7	8	126-XX-648-41-001000	126-XX-648-41-002000	126-XX-648-41-003000
50	63,5	15,24	17,7	8	126-XX-650-41-001000	126-XX-650-41-002000	126-XX-650-41-003000
52	66,0	15,24	17,7	7	126-XX-652-41-001000	126-XX-652-41-002000	126-XX-652-41-003000
50	63,5	22,86	25,3	8	126-XX-950-41-001000	126-XX-950-41-002000	126-XX-950-41-003000
52	66,0	22,86	25,3	7	126-XX-952-41-001000	126-XX-952-41-002000	126-XX-952-41-003000
64	81,2	22,86	25,3	6	126-XX-964-41-001000	126-XX-964-41-002000	126-XX-964-41-003000

SPECIFY PLATING CODE XX=		93		43◇	
Sleeve (Pin)		5,08µm Sn/Pb		5,08µm Sn	
Contact (Clip)		0,76µm Au		0,76µm Au	

For RoHS compliance select ◇ plating code.

DUAL-IN-LINE SOCKETS
Elevated
Open Frame

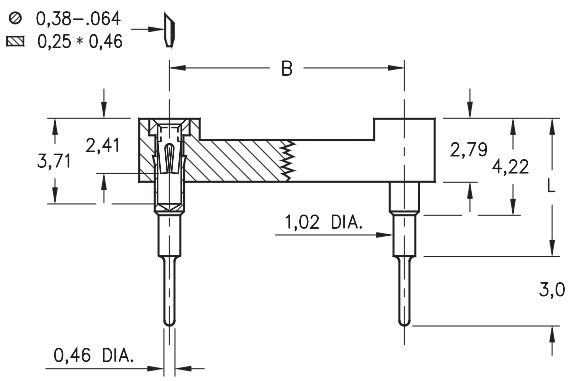

- For mechanical and electrical interconnection and stacking of PCBs.
- Other platings and heights are available upon request.
- Hi-Rel, 4-finger BeCu #30 contact is rated at 3 amps. See page 218 for details.
- Series 116 use MM #0153-X pins. See page 138 for details.
- Insulators are high temperature thermoplastic.

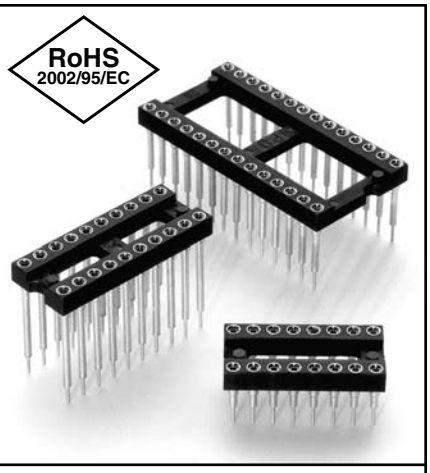

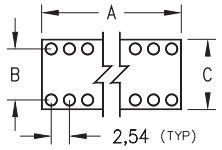

For Electrical, Mechanical & Enviromental Data, See pg. 4

Ordering Information

XX=Plating Code See Below

Total number of pins	A	B	C	Quantity per tube	L = 6,0	L = 8,0	L = 10,21	L = 11,99	L = 15,09
10	12,6	5,08	7,6	40	116-XX-210-41-006000	116-XX-210-41-003000	116-XX-210-41-007000	116-XX-210-41-008000	116-XX-210-41-001000
4	5,0	7,62	10,1	102	116-XX-304-41-006000	116-XX-304-41-003000	116-XX-304-41-007000	116-XX-304-41-008000	116-XX-304-41-001000
6	7,6	7,62	10,1	67	116-XX-306-41-006000	116-XX-306-41-003000	116-XX-306-41-007000	116-XX-306-41-008000	116-XX-306-41-001000
8	10,1	7,62	10,1	50	116-XX-308-41-006000	116-XX-308-41-003000	116-XX-308-41-007000	116-XX-308-41-008000	116-XX-308-41-001000
10	12,6	7,62	10,1	40	116-XX-310-41-006000	116-XX-310-41-003000	116-XX-310-41-007000	116-XX-310-41-008000	116-XX-310-41-001000
14	17,7	7,62	10,1	28	116-XX-314-41-006000	116-XX-314-41-003000	116-XX-314-41-007000	116-XX-314-41-008000	116-XX-314-41-001000
16	20,3	7,62	10,1	25	116-XX-316-41-006000	116-XX-316-41-003000	116-XX-316-41-007000	116-XX-316-41-008000	116-XX-316-41-001000
18	22,8	7,62	10,1	22	116-XX-318-41-006000	116-XX-318-41-003000	116-XX-318-41-007000	116-XX-318-41-008000	116-XX-318-41-001000
20	25,3	7,62	10,1	20	116-XX-320-41-006000	116-XX-320-41-003000	116-XX-320-41-007000	116-XX-320-41-008000	116-XX-320-41-001000
22	27,8	7,62	10,1	18	116-XX-322-41-006000	116-XX-322-41-003000	116-XX-322-41-007000	116-XX-322-41-008000	116-XX-322-41-001000
24	30,4	7,62	10,1	16	116-XX-324-41-006000	116-XX-324-41-003000	116-XX-324-41-007000	116-XX-324-41-008000	116-XX-324-41-001000
28	35,5	7,62	10,1	14	116-XX-328-41-006000	116-XX-328-41-003000	116-XX-328-41-007000	116-XX-328-41-008000	116-XX-328-41-001000
20	25,4	10,16	12,7	20	116-XX-420-41-006000	116-XX-420-41-003000	116-XX-420-41-007000	116-XX-420-41-008000	116-XX-420-41-001000
22	27,8	10,16	12,7	18	116-XX-422-41-006000	116-XX-422-41-003000	116-XX-422-41-007000	116-XX-422-41-008000	116-XX-422-41-001000
24	30,4	10,16	12,7	16	116-XX-424-41-006000	116-XX-424-41-003000	116-XX-424-41-007000	116-XX-424-41-008000	116-XX-424-41-001000
28	35,5	10,16	12,7	14	116-XX-428-41-006000	116-XX-428-41-003000	116-XX-428-41-007000	116-XX-428-41-008000	116-XX-428-41-001000
32	40,6	10,16	12,7	12	116-XX-432-41-006000	116-XX-432-41-003000	116-XX-432-41-007000	116-XX-432-41-008000	116-XX-432-41-001000
24	30,4	15,24	17,7	16	116-XX-624-41-006000	116-XX-624-41-003000	116-XX-624-41-007000	116-XX-624-41-008000	116-XX-624-41-001000
28	35,5	15,24	17,7	14	116-XX-628-41-006000	116-XX-628-41-003000	116-XX-628-41-007000	116-XX-628-41-008000	116-XX-628-41-001000
32	40,6	15,24	17,7	12	116-XX-632-41-006000	116-XX-632-41-003000	116-XX-632-41-007000	116-XX-632-41-008000	116-XX-632-41-001000
36	45,7	15,24	17,7	11	116-XX-636-41-006000	116-XX-636-41-003000	116-XX-636-41-007000	116-XX-636-41-008000	116-XX-636-41-001000
40	50,8	15,24	17,7	10	116-XX-640-41-006000	116-XX-640-41-003000	116-XX-640-41-007000	116-XX-640-41-008000	116-XX-640-41-001000
42	53,3	15,24	17,7	9	116-XX-642-41-006000	116-XX-642-41-003000	116-XX-642-41-007000	116-XX-642-41-008000	116-XX-642-41-001000
48	60,9	15,24	17,7	8	116-XX-648-41-006000	116-XX-648-41-003000	116-XX-648-41-007000	116-XX-648-41-008000	116-XX-648-41-001000
50	63,5	15,24	17,7	8	116-XX-650-41-006000	116-XX-650-41-003000	116-XX-650-41-007000	116-XX-650-41-008000	116-XX-650-41-001000
52	66,0	15,24	17,7	7	116-XX-652-41-006000	116-XX-652-41-003000	116-XX-652-41-007000	116-XX-652-41-008000	116-XX-652-41-001000
50	63,5	22,86	25,3	8	116-XX-950-41-006000	116-XX-950-41-003000	116-XX-950-41-007000	116-XX-950-41-008000	116-XX-950-41-001000
52	66,0	22,86	25,3	7	116-XX-952-41-006000	116-XX-952-41-003000	116-XX-952-41-007000	116-XX-952-41-008000	116-XX-952-41-001000
64	81,2	22,86	25,3	6	116-XX-964-41-006000	116-XX-964-41-003000	116-XX-964-41-007000	116-XX-964-41-008000	116-XX-964-41-001000

SPECIFY PLATING CODE XX=		93			43◇
Sleeve (Pin)		5,08µm Sn/Pb			5,08µm Sn
Contact (Clip)		0,76µm Au			0,76µm Au

For RoHS compliance select ◇ plating code.

DUAL-IN-LINE SOCKETS
Carrier Type
Solder Tail

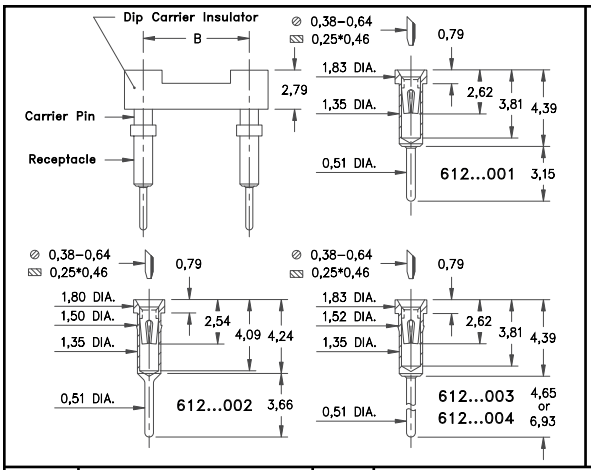

- Convenient way to load loose receptacles on a PC board.
- Removable plastic carriers can be returned for reloading.
- Hi-Rel, 4-finger BeCu #30 contact is rated at 3 amps. See page 218 for details.
- Series 612 use MM #0132, #0135, #0255 or #8855 pins. See pages 136 and 142 for details.
- Insulators are high temperature thermoplastic.

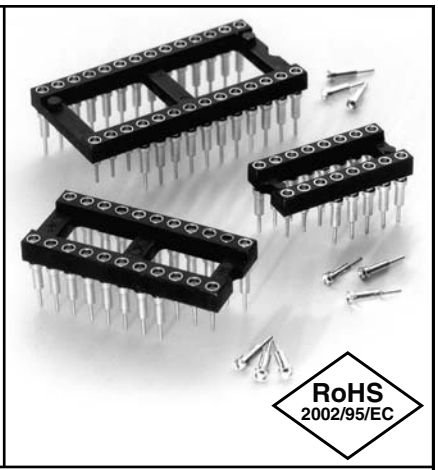

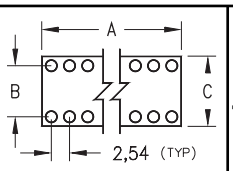

For Electrical, Mechanical & Enviromental Data, See pg. 4

Ordering Information

XX=Plating Code See Below

Total number of pins	A	B	C	Quantity per tube	Tail Length = 3,15 (0,56 Min. Mounting Hole)	Tail Length = 3,66 (0,56 Min. Mounting Hole)	Tail Length = 4,65 (0,56 Min. Mounting Hole)	Tail Length = 6,93 (0,56 Min. Mounting Hole)
10	12,6	5,08	7,6	40	612-XX-210-41-001000	612-XX-210-41-002000	612-XX-210-41-003000	612-XX-210-41-004000
4	5,0	7,62	10,1	102	612-XX-304-41-001000	612-XX-304-41-002000	612-XX-304-41-003000	612-XX-304-41-004000
6	7,6	7,62	10,1	68	612-XX-306-41-001000	612-XX-306-41-002000	612-XX-306-41-003000	612-XX-306-41-004000
8	10,1	7,62	10,1	50	612-XX-308-41-001000	612-XX-308-41-002000	612-XX-308-41-003000	612-XX-308-41-004000
10	12,6	7,62	10,1	40	612-XX-310-41-001000	612-XX-310-41-002000	612-XX-310-41-003000	612-XX-310-41-004000
14	17,7	7,62	10,1	28	612-XX-314-41-001000	612-XX-314-41-002000	612-XX-314-41-003000	612-XX-314-41-004000
16	20,3	7,62	10,1	25	612-XX-316-41-001000	612-XX-316-41-002000	612-XX-316-41-003000	612-XX-316-41-004000
18	22,8	7,62	10,1	22	612-XX-318-41-001000	612-XX-318-41-002000	612-XX-318-41-003000	612-XX-318-41-004000
20	25,3	7,62	10,1	20	612-XX-320-41-001000	612-XX-320-41-002000	612-XX-320-41-003000	612-XX-320-41-004000
22	27,8	7,62	10,1	18	612-XX-322-41-001000	612-XX-322-41-002000	612-XX-322-41-003000	612-XX-322-41-004000
24	30,4	7,62	10,1	16	612-XX-324-41-001000	612-XX-324-41-002000	612-XX-324-41-003000	612-XX-324-41-004000
28	35,5	7,62	10,1	14	612-XX-328-41-001000	612-XX-328-41-002000	612-XX-328-41-003000	612-XX-328-41-004000
20	25,4	10,16	12,7	20	612-XX-420-41-001000	612-XX-420-41-002000	612-XX-420-41-003000	612-XX-420-41-004000
22	27,8	10,16	12,7	18	612-XX-422-41-001000	612-XX-422-41-002000	612-XX-422-41-003000	612-XX-422-41-004000
24	30,4	10,16	12,7	16	612-XX-424-41-001000	612-XX-424-41-002000	612-XX-424-41-003000	612-XX-424-41-004000
28	35,5	10,16	12,7	14	612-XX-428-41-001000	612-XX-428-41-002000	612-XX-428-41-003000	612-XX-428-41-004000
32	40,6	10,16	12,7	12	612-XX-432-41-001000	612-XX-432-41-002000	612-XX-432-41-003000	612-XX-432-41-004000
24	30,4	15,24	17,7	16	612-XX-624-41-001000	612-XX-624-41-002000	612-XX-624-41-003000	612-XX-624-41-004000
28	35,5	15,24	17,7	14	612-XX-628-41-001000	612-XX-628-41-002000	612-XX-628-41-003000	612-XX-628-41-004000
32	40,6	15,24	17,7	12	612-XX-632-41-001000	612-XX-632-41-002000	612-XX-632-41-003000	612-XX-632-41-004000
36	45,7	15,24	17,7	11	612-XX-636-41-001000	612-XX-636-41-002000	612-XX-636-41-003000	612-XX-636-41-004000
40	50,8	15,24	17,7	10	612-XX-640-41-001000	612-XX-640-41-002000	612-XX-640-41-003000	612-XX-640-41-004000
42	53,3	15,24	17,7	9	612-XX-642-41-001000	612-XX-642-41-002000	612-XX-642-41-003000	612-XX-642-41-004000
48	60,9	15,24	17,7	8	612-XX-648-41-001000	612-XX-648-41-002000	612-XX-648-41-003000	612-XX-648-41-004000
50	63,5	15,24	17,7	8	612-XX-650-41-001000	612-XX-650-41-002000	612-XX-650-41-003000	612-XX-650-41-004000
52	66,0	15,24	17,7	7	612-XX-652-41-001000	612-XX-652-41-002000	612-XX-652-41-003000	612-XX-652-41-004000
50	63,5	22,86	25,3	8	612-XX-950-41-001000	612-XX-950-41-002000	612-XX-950-41-003000	612-XX-950-41-004000
52	66,0	22,86	25,3	7	612-XX-952-41-001000	612-XX-952-41-002000	612-XX-952-41-003000	612-XX-952-41-004000
64	81,2	22,86	25,3	6	612-XX-964-41-001000	612-XX-964-41-002000	612-XX-964-41-003000	612-XX-964-41-004000

SPECIFY PLATING CODE XX=		93		43◇	
Sleeve (Pin)		5,08µm Sn/Pb		5,08µm Sn	
Contact (Clip)		0,76µm Au		0,76µm Au	

For RoHS compliance select ◇ plating code.

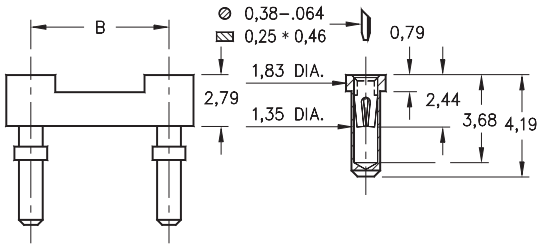

- Convenient way to load loose receptacles on a PC board.
- Removable plastic carriers can be returned for reloading.
- Hi-Rel, 4-finger BeCu #30 contact is rated at 3 amps. See page 218 for details.
- Series 614 use MM #1401 pins. See page 141 for details.
- Insulators are high temperature thermoplastic.

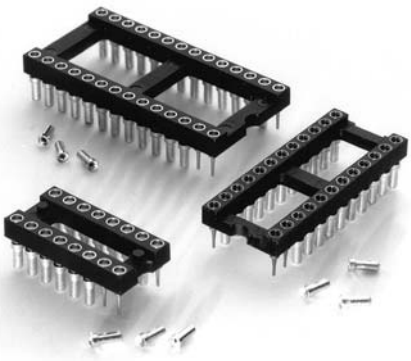

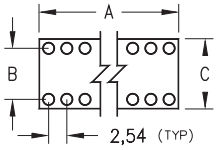

Ordering Information

Total number of pins	A	B	C	Quantity per tube	Ordering Information
10	12,6	5,08	7,6	40	614-XX-210-41-001000
4	5,0	7,62	10,1	102	614-XX-304-41-001000
6	7,6	7,62	10,1	67	614-XX-306-41-001000
8	10,1	7,62	10,1	50	614-XX-308-41-001000
10	12,6	7,62	10,1	40	614-XX-310-41-001000
14	17,7	7,62	10,1	28	614-XX-314-41-001000
16	20,3	7,62	10,1	25	614-XX-316-41-001000
18	22,8	7,62	10,1	22	614-XX-318-41-001000
20	25,3	7,62	10,1	20	614-XX-320-41-001000
22	27,8	7,62	10,1	18	614-XX-322-41-001000
24	30,4	7,62	10,1	16	614-XX-324-41-001000
28	35,5	7,62	10,1	14	614-XX-328-41-001000
20	25,4	10,16	12,7	20	614-XX-420-41-001000
22	27,8	10,16	12,7	18	614-XX-422-41-001000
24	30,4	10,16	12,7	16	614-XX-424-41-001000
28	35,5	10,16	12,7	14	614-XX-428-41-001000
32	40,6	10,16	12,7	12	614-XX-432-41-001000
24	30,4	15,24	17,7	16	614-XX-624-41-001000
28	35,5	15,24	17,7	14	614-XX-628-41-001000
32	40,6	15,24	17,7	12	614-XX-632-41-001000
36	45,7	15,24	17,7	11	614-XX-636-41-001000
40	50,8	15,24	17,7	10	614-XX-640-41-001000
42	53,3	15,24	17,7	9	614-XX-642-41-001000
48	60,9	15,24	17,7	8	614-XX-648-41-001000
50	63,5	15,24	17,7	8	614-XX-650-41-001000
52	66,0	15,24	17,7	7	614-XX-652-41-001000
50	63,5	22,86	25,3	8	614-XX-950-41-001000
52	66,0	22,86	25,3	7	614-XX-952-41-001000
64	81,2	22,86	25,3	6	614-XX-964-41-001000

RoHS 2002/95/EC

For RoHS compliance select ◇ plating code.

For Electrical, Mechanical & Enviromental Data, See pg. 4

XX=Plating Code See Below

SPECIFY PLATING CODE XX=			93			43◇	
Sleeve (Pin)			5,08µm Sn/Pb			5,08µm Sn	
Contact (Clip)			0,76µm Au			0,76µm Au	

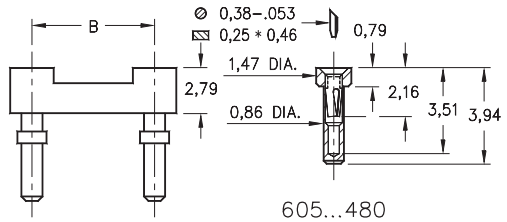

605...480

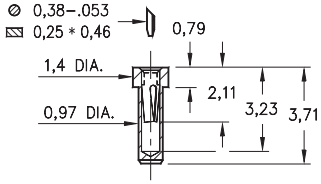

614...007

- Low profile receptacles sit only 0,79 high above the board.
- Removable plastic carriers can be returned for reloading.
- Hi-Rel, 3-finger BeCu #11 contact is rated at 3 amps. See page 217 for details.
- Series 605 and 614 use MM #0548 & #1407 pins. See page 128 for details.
- Insulators are high temperature thermoplastic.

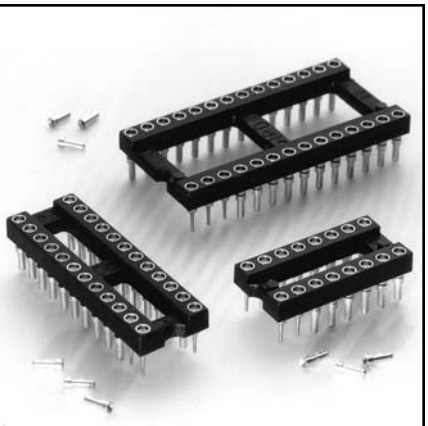

Ordering Information

Total number of pins	A	B	C	Quantity per tube	Length = 3,71 (0,99 Min. Mounting Hole)	Length = 3,94 (0,89 Min. Mounting Hole)
10	12,6	5,08	7,6	40	614-XX-210-31-007000	605-XX-210-11-480000
4	5,0	7,62	10,1	102	614-XX-304-31-007000	605-XX-304-11-480000
6	7,6	7,62	10,1	68	614-XX-306-31-007000	605-XX-306-11-480000
8	10,1	7,62	10,1	50	614-XX-308-31-007000	605-XX-308-11-480000
10	12,6	7,62	10,1	40	614-XX-310-31-007000	605-XX-310-11-480000
14	17,7	7,62	10,1	28	614-XX-314-31-007000	605-XX-314-11-480000
16	20,3	7,62	10,1	25	614-XX-316-31-007000	605-XX-316-11-480000
18	22,8	7,62	10,1	22	614-XX-318-31-007000	605-XX-318-11-480000
20	25,3	7,62	10,1	20	614-XX-320-31-007000	605-XX-320-11-480000
22	27,8	7,62	10,1	18	614-XX-322-31-007000	605-XX-322-11-480000
24	30,4	7,62	10,1	16	614-XX-324-31-007000	605-XX-324-11-480000
28	35,5	7,62	10,1	14	614-XX-328-31-007000	605-XX-328-11-480000
20	25,4	10,16	12,7	20	614-XX-420-31-007000	605-XX-420-11-480000
22	27,8	10,16	12,7	18	614-XX-422-31-007000	605-XX-422-11-480000
24	30,4	10,16	12,7	16	614-XX-424-31-007000	605-XX-424-11-480000
28	35,5	10,16	12,7	14	614-XX-428-31-007000	605-XX-428-11-480000
32	40,6	10,16	12,7	12	614-XX-432-31-007000	605-XX-432-11-480000
24	30,4	15,24	17,7	16	614-XX-624-31-007000	605-XX-624-11-480000
28	35,5	15,24	17,7	14	614-XX-628-31-007000	605-XX-628-11-480000
32	40,6	15,24	17,7	12	614-XX-632-31-007000	605-XX-632-11-480000
36	45,7	15,24	17,7	11	614-XX-636-31-007000	605-XX-636-11-480000
40	50,8	15,24	17,7	10	614-XX-640-31-007000	605-XX-640-11-480000
42	53,3	15,24	17,7	9	614-XX-642-31-007000	605-XX-642-11-480000
48	60,9	15,24	17,7	8	614-XX-648-31-007000	605-XX-648-11-480000
50	63,5	15,24	17,7	8	614-XX-650-31-007000	605-XX-650-11-480000
52	66,0	15,24	17,7	7	614-XX-652-31-007000	605-XX-652-11-480000
50	63,5	22,86	25,3	8	614-XX-950-31-007000	605-XX-950-11-480000
52	66,0	22,86	25,3	7	614-XX-952-31-007000	605-XX-952-11-480000
64	81,2	22,86	25,3	6	614-XX-964-31-007000	605-XX-964-11-480000

RoHS 2002/95/EC

For RoHS compliance select ◇ plating code.

For Electrical, Mechanical & Enviromental Data, See pg. 4

XX=Plating Code See Below

SPECIFY PLATING CODE XX=			93			43◇	
Sleeve (Pin)			5,08µm Sn/Pb			5,08µm Sn	
Contact (Clip)			0,76µm Au			0,76µm Au	

DUAL-IN-LINE SOCKETS
Carrier Type
Ultra Low Profile

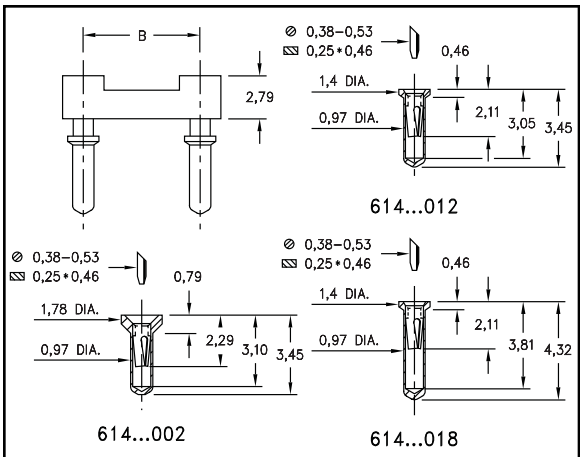

- Ultra low profile receptacles sit only 0,46 to 0,79 high above the board.
- Removable plastic carriers can be returned for reloading.
- Hi-Rel, 3-finger BeCu #11 contact is rated at 3 amps. See page 217 for details.
- Series 614 use MM #0552-1, #0552-2 or #0442-0 pins. See pages 128 and 129 for details.
- Insulators are high temperature thermoplastic.

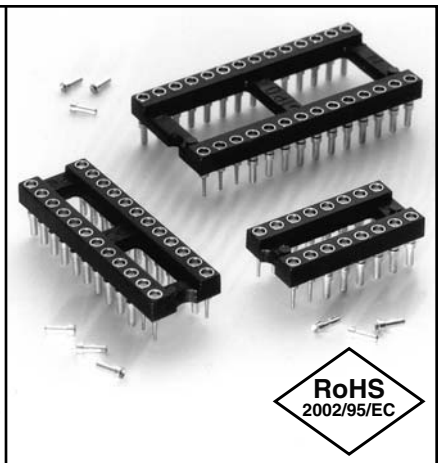

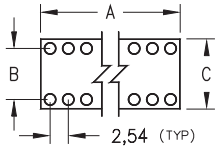

For Electrical, Mechanical & Enviromental Data, See pg. 4

Ordering Information

XX=Plating Code See Below

Total number of pins	A	B	C	Quantity per tube	Length = 3,45 (1,0 Min. Mounting Hole)	Length = 3,45 (1,0 Min. Mounting Hole)	Length = 4,32 (1,0 Min. Mounting Hole)
10	12,6	5,08	7,6	40	614-XX-210-31-012000	614-XX-210-31-002000	614-XX-210-31-018000
4	5,0	7,62	10,1	102	614-XX-304-31-012000	614-XX-304-31-002000	614-XX-304-31-018000
6	7,6	7,62	10,1	67	614-XX-306-31-012000	614-XX-306-31-002000	614-XX-306-31-018000
8	10,1	7,62	10,1	50	614-XX-308-31-012000	614-XX-308-31-002000	614-XX-308-31-018000
10	12,6	7,62	10,1	40	614-XX-310-31-012000	614-XX-310-31-002000	614-XX-310-31-018000
14	17,7	7,62	10,1	28	614-XX-314-31-012000	614-XX-314-31-002000	614-XX-314-31-018000
16	20,3	7,62	10,1	25	614-XX-316-31-012000	614-XX-316-31-002000	614-XX-316-31-018000
18	22,8	7,62	10,1	22	614-XX-318-31-012000	614-XX-318-31-002000	614-XX-318-31-018000
20	25,3	7,62	10,1	20	614-XX-320-31-012000	614-XX-320-31-002000	614-XX-320-31-018000
22	27,8	7,62	10,1	18	614-XX-322-31-012000	614-XX-322-31-002000	614-XX-322-31-018000
24	30,4	7,62	10,1	16	614-XX-324-31-012000	614-XX-324-31-002000	614-XX-324-31-018000
28	35,5	7,62	10,1	14	614-XX-328-31-012000	614-XX-328-31-002000	614-XX-328-31-018000
20	25,4	10,16	12,7	20	614-XX-420-31-012000	614-XX-420-31-002000	614-XX-420-31-018000
22	27,8	10,16	12,7	18	614-XX-422-31-012000	614-XX-422-31-002000	614-XX-422-31-018000
24	30,4	10,16	12,7	16	614-XX-424-31-012000	614-XX-424-31-002000	614-XX-424-31-018000
28	35,5	10,16	12,7	14	614-XX-428-31-012000	614-XX-428-31-002000	614-XX-428-31-018000
32	40,6	10,16	12,7	12	614-XX-432-31-012000	614-XX-432-31-002000	614-XX-432-31-018000
24	30,4	15,24	17,7	16	614-XX-624-31-012000	614-XX-624-31-002000	614-XX-624-31-018000
28	35,5	15,24	17,7	14	614-XX-628-31-012000	614-XX-628-31-002000	614-XX-628-31-018000
32	40,6	15,24	17,7	12	614-XX-632-31-012000	614-XX-632-31-002000	614-XX-632-31-018000
36	45,7	15,24	17,7	11	614-XX-636-31-012000	614-XX-636-31-002000	614-XX-636-31-018000
40	50,8	15,24	17,7	10	614-XX-640-31-012000	614-XX-640-31-002000	614-XX-640-31-018000
42	53,3	15,24	17,7	9	614-XX-642-31-012000	614-XX-642-31-002000	614-XX-642-31-018000
48	60,9	15,24	17,7	8	614-XX-648-31-012000	614-XX-648-31-002000	614-XX-648-31-018000
50	63,5	15,24	17,7	8	614-XX-650-31-012000	614-XX-650-31-002000	614-XX-650-31-018000
52	66,0	15,24	17,7	7	614-XX-652-31-012000	614-XX-652-31-002000	614-XX-652-31-018000
50	63,5	22,86	25,3	8	614-XX-950-31-012000	614-XX-950-31-002000	614-XX-950-31-018000
52	66,0	22,86	25,3	7	614-XX-952-31-012000	614-XX-952-31-002000	614-XX-952-31-018000
64	81,2	22,86	25,3	6	614-XX-964-31-012000	614-XX-964-31-002000	614-XX-964-31-018000

SPECIFY PLATING CODE XX=		93		43◇	
Sleeve (Pin)		5,08µm Sn/Pb		5,08µm Sn	
Contact (Clip)		0,76µm Au		0,76µm Au	

For RoHS compliance select ◇ plating code.

DUAL-IN-LINE PIN HEADERS
Solder Tail and Wrapost
Open Frame

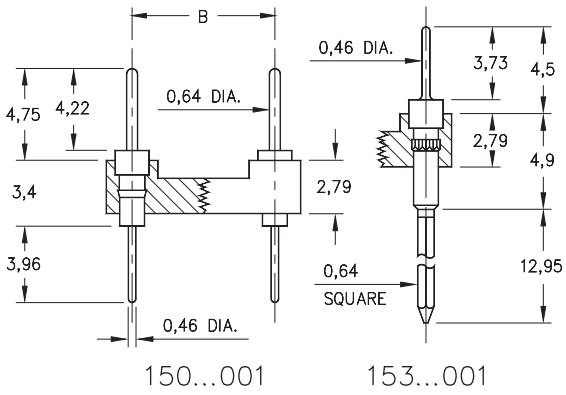

- Series 150 DIL Headers are equipped with 0,64 dia. pins MM #0290. See page 182 for details.
- Series 153 DIL Headers have 3-level wraposts MM #5301. See page 194 for details.
- Both series have 0,46 dia. solder tails which are pluggable into standard contacts.
- Insulators are high temperature thermoplastic.

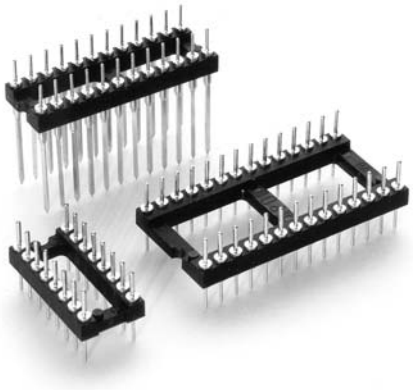

Ordering Information

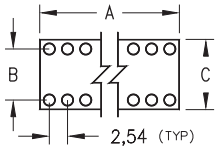

Total number of pins	A	B	C	Quantity per tube	Solder Tail	3 Level Wrapost
10	12,6	5,08	7,6	40	150-XX-210-00-001000	153-10-210-00-001000
4	5,0	7,62	10,1	102	150-XX-304-00-001000	153-10-304-00-001000
6	7,6	7,62	10,1	67	150-XX-306-00-001000	153-10-306-00-001000
8	10,1	7,62	10,1	50	150-XX-308-00-001000	153-10-308-00-001000
10	12,6	7,62	10,1	40	150-XX-310-00-001000	153-10-310-00-001000
14	17,7	7,62	10,1	29	150-XX-314-00-001000	153-10-314-00-001000
16	20,3	7,62	10,1	25	150-XX-316-00-001000	153-10-316-00-001000
18	22,8	7,62	10,1	22	150-XX-318-00-001000	153-10-318-00-001000
20	25,3	7,62	10,1	20	150-XX-320-00-001000	153-10-320-00-001000
22	27,8	7,62	10,1	18	150-XX-322-00-001000	153-10-322-00-001000
24	30,4	7,62	10,1	16	150-XX-324-00-001000	153-10-324-00-001000
28	35,5	7,62	10,1	14	150-XX-328-00-001000	153-10-328-00-001000
20	25,4	10,16	12,7	20	150-XX-420-00-001000	153-10-420-00-001000
22	27,8	10,16	12,7	18	150-XX-422-00-001000	153-10-422-00-001000
24	30,4	10,16	12,7	16	150-XX-424-00-001000	153-10-424-00-001000
28	35,5	10,16	12,7	14	150-XX-428-00-001000	153-10-428-00-001000
32	40,6	10,16	12,7	12	150-XX-432-00-001000	153-10-432-00-001000
24	30,4	15,24	17,7	16	150-XX-624-00-001000	153-10-624-00-001000
28	35,5	15,24	17,7	14	150-XX-628-00-001000	153-10-628-00-001000
32	40,6	15,24	17,7	12	150-XX-632-00-001000	153-10-632-00-001000
36	45,7	15,24	17,7	11	150-XX-636-00-001000	153-10-636-00-001000
40	50,8	15,24	17,7	10	150-XX-640-00-001000	153-10-640-00-001000
42	53,3	15,24	17,7	9	150-XX-642-00-001000	153-10-642-00-001000
48	60,9	15,24	17,7	8	150-XX-648-00-001000	153-10-648-00-001000
50	63,5	15,24	17,7	8	150-XX-650-00-001000	153-10-650-00-001000
52	66,0	15,24	17,7	7	150-XX-652-00-001000	153-10-652-00-001000
50	63,5	22,86	25,3	8	150-XX-950-00-001000	153-10-950-00-001000
52	66,0	22,86	25,3	7	150-XX-952-00-001000	153-10-952-00-001000
64	81,2	22,86	25,3	6	150-XX-964-00-001000	153-10-964-00-001000

RoHS 2002/95/EC

For RoHS compliance select ◇ plating code.

For Electrical, Mechanical & Enviromental Data, See pg. 4

XX=Plating Code See Below

SPECIFY PLATING CODE XX=	10◇	90	40◇
Pin Plating	0,25µm Au	5,08µm Sn/Pb	5,08µm Sn

DUAL-IN-LINE SLOTTED HEADERS
Solder Tail and Wrapost
Open Frame

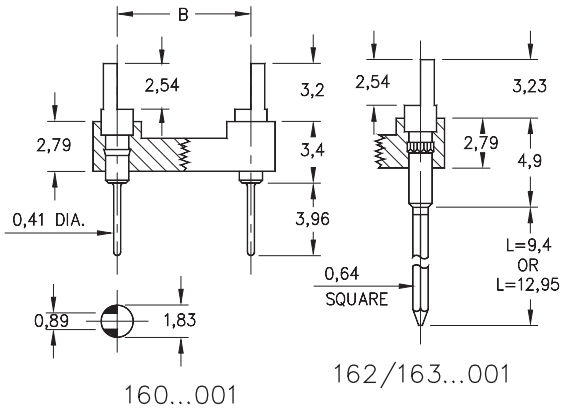

- Series 160, 162, and 163 DIL Headers are equipped with slotted heads to accept wires or component leads.
- Series 160 terminations are pluggable 0,46 dia. solder tails MM #0282, See page 183 for details. Series 162 and 163 terminations are two or three level wraposts MM #1106. See page 195 for details.
- Insulators are high temperature thermoplastic.

RoHS 2002/95/EC

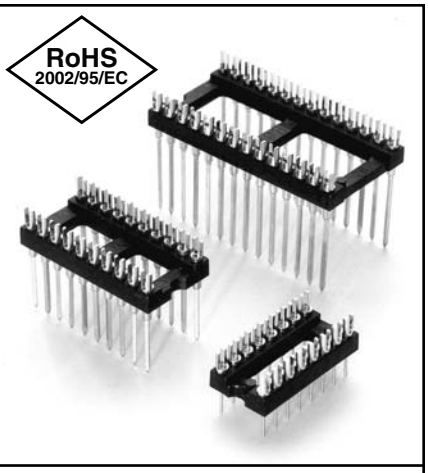

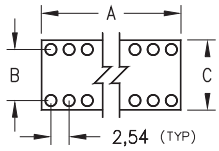

For Electrical, Mechanical & Enviromental Data, See pg. 4

Ordering Information

XX=Plating Code See Below

Total number of pins	A	B	C	Quantity per tube	Solder Tail	2 Level Wrapost L = 9,4	3 Level Wrapost L = 12,95
10	12,6	5,08	7,6	41	160-XX-210-00-001000	162-10-210-00-001000	163-10-210-00-001000
4	5,0	7,62	10,1	102	160-XX-304-00-001000	162-10-304-00-001000	163-10-304-00-001000
6	7,6	7,62	10,1	67	160-XX-306-00-001000	162-10-306-00-001000	163-10-306-00-001000
8	10,1	7,62	10,1	50	160-XX-308-00-001000	162-10-308-00-001000	163-10-308-00-001000
10	12,6	7,62	10,1	40	160-XX-310-00-001000	162-10-310-00-001000	163-10-310-00-001000
14	17,7	7,62	10,1	28	160-XX-314-00-001000	162-10-314-00-001000	163-10-314-00-001000
16	20,3	7,62	10,1	25	160-XX-316-00-001000	162-10-316-00-001000	163-10-316-00-001000
18	22,8	7,62	10,1	22	160-XX-318-00-001000	162-10-318-00-001000	163-10-318-00-001000
20	25,3	7,62	10,1	20	160-XX-320-00-001000	162-10-320-00-001000	163-10-320-00-001000
22	27,8	7,62	10,1	18	160-XX-322-00-001000	162-10-322-00-001000	163-10-322-00-001000
24	30,4	7,62	10,1	16	160-XX-324-00-001000	162-10-324-00-001000	163-10-324-00-001000
28	35,5	7,62	10,1	14	160-XX-328-00-001000	162-10-328-00-001000	163-10-328-00-001000
20	25,4	10,16	12,7	20	160-XX-420-00-001000	162-10-420-00-001000	163-10-420-00-001000
22	27,8	10,16	12,7	18	160-XX-422-00-001000	162-10-422-00-001000	163-10-422-00-001000
24	30,4	10,16	12,7	16	160-XX-424-00-001000	162-10-424-00-001000	163-10-424-00-001000
28	35,5	10,16	12,7	14	160-XX-428-00-001000	162-10-428-00-001000	163-10-428-00-001000
32	40,6	10,16	12,7	12	160-XX-432-00-001000	162-10-432-00-001000	163-10-432-00-001000
24	30,4	15,24	17,7	16	160-XX-624-00-001000	162-10-624-00-001000	163-10-624-00-001000
28	35,5	15,24	17,7	14	160-XX-628-00-001000	162-10-628-00-001000	163-10-628-00-001000
32	40,6	15,24	17,7	12	160-XX-632-00-001000	162-10-632-00-001000	163-10-632-00-001000
36	45,7	15,24	17,7	11	160-XX-636-00-001000	162-10-636-00-001000	163-10-636-00-001000
40	50,8	15,24	17,7	10	160-XX-640-00-001000	162-10-640-00-001000	163-10-640-00-001000
42	53,3	15,24	17,7	9	160-XX-642-00-001000	162-10-642-00-001000	163-10-642-00-001000
48	60,9	15,24	17,7	8	160-XX-648-00-001000	162-10-648-00-001000	163-10-648-00-001000
50	63,5	15,24	17,7	8	160-XX-650-00-001000	162-10-650-00-001000	163-10-650-00-001000
52	66,0	15,24	17,7	7	160-XX-652-00-001000	162-10-652-00-001000	163-10-652-00-001000
50	63,5	22,86	25,3	8	160-XX-950-00-001000	162-10-950-00-001000	163-10-950-00-001000
52	66,0	22,86	25,3	7	160-XX-952-00-001000	162-10-952-00-001000	163-10-952-00-001000
64	81,2	22,86	25,3	6	160-XX-964-00-001000	162-10-964-00-001000	163-10-964-00-001000

For RoHS compliance select ◇ plating code.

SPECIFY PLATING CODE XX=	10◇	90	40◇
Pin Plating	0,25µm Au	5,08µm Sn/Pb	5,08µm Sn

DUAL-IN-LINE TURRET HEADERS
Solder Tail and Wrapost
Open Frame

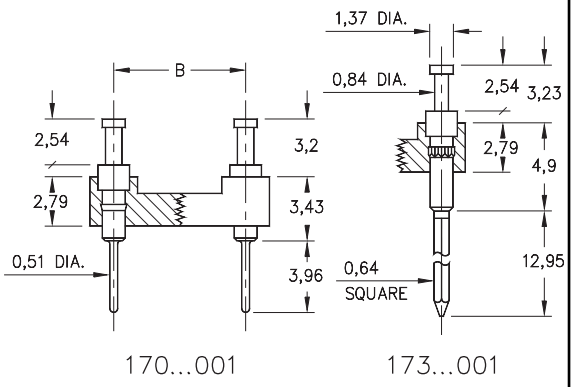

- Series 170 &173 DIL headers are equipped with turret heads for wiring applications.
- Series 170 terminations are pluggable 0,51 dia. solder tails MM #0700, See page 183 for details. Series 173 terminations are three level wraposts MM #0730. See page 195 for details.
- Insulators are high temperature thermoplastic.

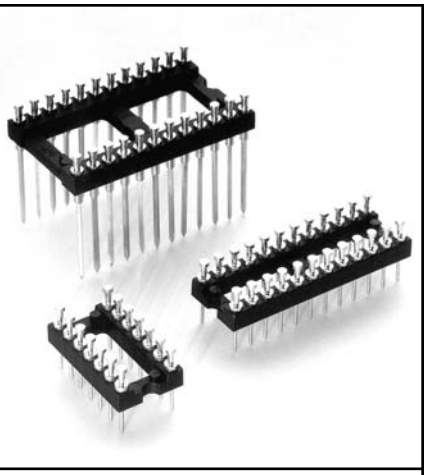

Ordering Information

Total number of pins	A	B	C	Quantity per tube	Solder Tail	3 Level Wrapost
10	12,6	5,08	7,6	41	170-XX-210-00-001000	173-10-210-00-001000
4	5,0	7,62	10,1	102	170-XX-304-00-001000	173-10-304-00-001000
6	7,6	7,62	10,1	67	170-XX-306-00-001000	173-10-306-00-001000
8	10,1	7,62	10,1	50	170-XX-308-00-001000	173-10-308-00-001000
10	12,6	7,62	10,1	40	170-XX-310-00-001000	173-10-310-00-001000
14	17,7	7,62	10,1	28	170-XX-314-00-001000	173-10-314-00-001000
16	20,3	7,62	10,1	25	170-XX-316-00-001000	173-10-316-00-001000
18	22,8	7,62	10,1	22	170-XX-318-00-001000	173-10-318-00-001000
20	25,3	7,62	10,1	20	170-XX-320-00-001000	173-10-320-00-001000
22	27,8	7,62	10,1	18	170-XX-322-00-001000	173-10-322-00-001000
24	30,4	7,62	10,1	16	170-XX-324-00-001000	173-10-324-00-001000
28	35,5	7,62	10,1	14	170-XX-328-00-001000	173-10-328-00-001000
20	25,4	10,16	12,7	20	170-XX-420-00-001000	173-10-420-00-001000
22	27,8	10,16	12,7	18	170-XX-422-00-001000	173-10-422-00-001000
24	30,4	10,16	12,7	16	170-XX-424-00-001000	173-10-424-00-001000
28	35,5	10,16	12,7	14	170-XX-428-00-001000	173-10-428-00-001000
32	40,6	10,16	12,7	12	170-XX-432-00-001000	173-10-432-00-001000
24	30,4	15,24	17,7	16	170-XX-624-00-001000	173-10-624-00-001000
28	35,5	15,24	17,7	14	170-XX-628-00-001000	173-10-628-00-001000
32	40,6	15,24	17,7	12	170-XX-632-00-001000	173-10-632-00-001000
36	45,7	15,24	17,7	11	170-XX-636-00-001000	173-10-636-00-001000
40	50,8	15,24	17,7	10	170-XX-640-00-001000	173-10-640-00-001000
42	53,3	15,24	17,7	9	170-XX-642-00-001000	173-10-642-00-001000
48	60,9	15,24	17,7	8	170-XX-648-00-001000	173-10-648-00-001000
50	63,5	15,24	17,7	8	170-XX-650-00-001000	173-10-650-00-001000
52	66,0	15,24	17,7	7	170-XX-652-00-001000	173-10-652-00-001000
50	63,5	22,86	25,3	8	170-XX-950-00-001000	173-10-950-00-001000
52	66,0	22,86	25,3	7	170-XX-952-00-001000	173-10-952-00-001000
64	81,2	22,86	25,3	6	170-XX-964-00-001000	173-10-964-00-001000

SPECIFY PLATING CODE XX=	10◇	90	40◇
Pin Plating	0,25µm Au	5,08µm Sn/Pb	5,08µm Sn

RoHS 2002/95/EC

For RoHS compliance select ◇ plating code.

For Electrical, Mechanical & Enviromental Data, See pg. 4

XX=Plating Code See Below

DUAL-IN-LINE SOLDER CUP HEADERS
Solder Tail and Wrapost
Open Frame

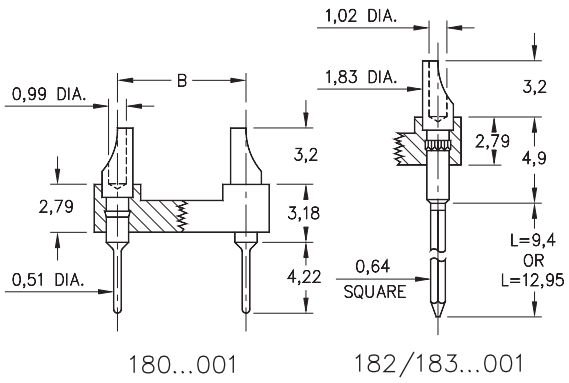

- Series 180, 182, and 183 DIL Headers are equipped with solder cups for wiring applications.
- Series 180 terminations are pluggable 0,51 dia. solder tails MM #8000, See page 183 for details. Series 182 and 183 terminations are two or three level wraposts MM #8301. See page 194 for details.
- Insulators are high temperature thermoplastic.

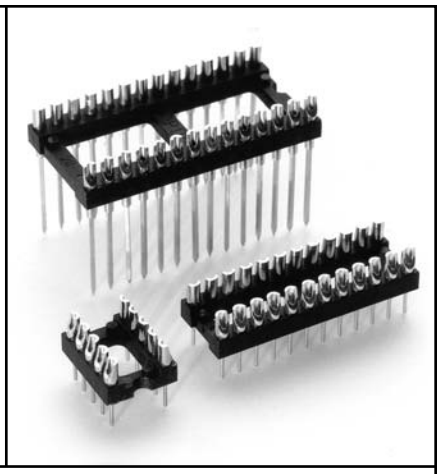

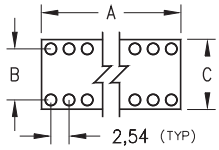

For Electrical, Mechanical & Enviromental Data, See pg. 4

Ordering Information

RoHS 2002/95/EC

Total number of pins	A	B	C	Quantity per tube	Solder Tail	2 Level Wrapost L = 9,4	3 Level Wrapost L = 12,95
10	12,6	5,08	7,6	41	180-10-210-00-001000	182-10-210-00-001000	183-10-210-00-001000
4	5,0	7,62	10,1	102	180-10-304-00-001000	182-10-304-00-001000	183-10-304-00-001000
6	7,6	7,62	10,1	67	180-10-306-00-001000	182-10-306-00-001000	183-10-306-00-001000
8	10,1	7,62	10,1	50	180-10-308-00-001000	182-10-308-00-001000	183-10-308-00-001000
10	12,6	7,62	10,1	40	180-10-310-00-001000	182-10-310-00-001000	183-10-310-00-001000
14	17,7	7,62	10,1	28	180-10-314-00-001000	182-10-314-00-001000	183-10-314-00-001000
16	20,3	7,62	10,1	25	180-10-316-00-001000	182-10-316-00-001000	183-10-316-00-001000
18	22,8	7,62	10,1	22	180-10-318-00-001000	182-10-318-00-001000	183-10-318-00-001000
20	25,3	7,62	10,1	20	180-10-320-00-001000	182-10-320-00-001000	183-10-320-00-001000
22	27,8	7,62	10,1	18	180-10-322-00-001000	182-10-322-00-001000	183-10-322-00-001000
24	30,4	7,62	10,1	16	180-10-324-00-001000	182-10-324-00-001000	183-10-324-00-001000
28	35,5	7,62	10,1	14	180-10-328-00-001000	182-10-328-00-001000	183-10-328-00-001000
20	25,4	10,16	12,7	20	180-10-420-00-001000	182-10-420-00-001000	183-10-420-00-001000
22	27,8	10,16	12,7	18	180-10-422-00-001000	182-10-422-00-001000	183-10-422-00-001000
24	30,4	10,16	12,7	16	180-10-424-00-001000	182-10-424-00-001000	183-10-424-00-001000
28	35,5	10,16	12,7	14	180-10-428-00-001000	182-10-428-00-001000	183-10-428-00-001000
32	40,6	10,16	12,7	12	180-10-432-00-001000	182-10-432-00-001000	183-10-432-00-001000
24	30,4	15,24	17,7	16	180-10-624-00-001000	182-10-624-00-001000	183-10-624-00-001000
28	35,5	15,24	17,7	14	180-10-628-00-001000	182-10-628-00-001000	183-10-628-00-001000
32	40,6	15,24	17,7	12	180-10-632-00-001000	182-10-632-00-001000	183-10-632-00-001000
36	45,7	15,24	17,7	11	180-10-636-00-001000	182-10-636-00-001000	183-10-636-00-001000
40	50,8	15,24	17,7	10	180-10-640-00-001000	182-10-640-00-001000	183-10-640-00-001000
42	53,3	15,24	17,7	9	180-10-642-00-001000	182-10-642-00-001000	183-10-642-00-001000
48	60,9	15,24	17,7	8	180-10-648-00-001000	182-10-648-00-001000	183-10-648-00-001000
50	63,5	15,24	17,7	8	180-10-650-00-001000	182-10-650-00-001000	183-10-650-00-001000
52	66,0	15,24	17,7	7	180-10-652-00-001000	182-10-652-00-001000	183-10-652-00-001000
50	63,5	22,86	25,3	8	180-10-950-00-001000	182-10-950-00-001000	183-10-950-00-001000
52	66,0	22,86	25,3	7	180-10-952-00-001000	182-10-952-00-001000	183-10-952-00-001000
64	81,2	22,86	25,3	6	180-10-964-00-001000	182-10-964-00-001000	183-10-964-00-001000

For RoHS compliance select ◇ plating code.

SPECIFY PLATING CODE XX=	10◇			
Pin Plating	0,25µm Au			

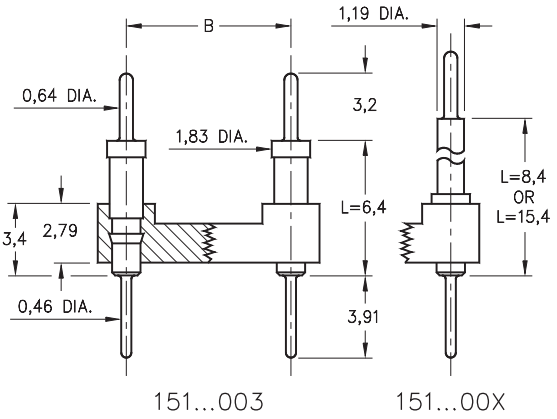

- Series 151 DIL Headers combine 0,64 dia. tails with pluggable 0,46 dia. solder tails.
- Series:
  151...003 use MM #5503 pins
  151...004 use MM #5504 pins
  151...005 use MM #5505 pins
  See page 181 for details.
- Insulators are high temperature thermoplastic.

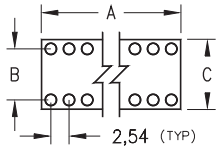

For Electrical, Mechanical & Enviromental Data, See pg. 4

Ordering Information

RoHS 2002/95/EC

Total number of pins	A	B	C	Quantity per tube	L = 6,4	L = 8,4	L = 15,4
10	12,6	5,08	7,6	41	151-10-210-00-003000	151-10-210-00-004000	151-10-210-00-005000
4	5,0	7,62	10,1	102	151-10-304-00-003000	151-10-304-00-004000	151-10-304-00-005000
6	7,6	7,62	10,1	67	151-10-306-00-003000	151-10-306-00-004000	151-10-306-00-005000
8	10,1	7,62	10,1	50	151-10-308-00-003000	151-10-308-00-004000	151-10-308-00-005000
10	12,6	7,62	10,1	40	151-10-310-00-003000	151-10-310-00-004000	151-10-310-00-005000
14	17,7	7,62	10,1	28	151-10-314-00-003000	151-10-314-00-004000	151-10-314-00-005000
16	20,3	7,62	10,1	25	151-10-316-00-003000	151-10-316-00-004000	151-10-316-00-005000
18	22,8	7,62	10,1	22	151-10-318-00-003000	151-10-318-00-004000	151-10-318-00-005000
20	25,3	7,62	10,1	20	151-10-320-00-003000	151-10-320-00-004000	151-10-320-00-005000
22	27,8	7,62	10,1	18	151-10-322-00-003000	151-10-322-00-004000	151-10-322-00-005000
24	30,4	7,62	10,1	16	151-10-324-00-003000	151-10-324-00-004000	151-10-324-00-005000
28	35,5	7,62	10,1	14	151-10-328-00-003000	151-10-328-00-004000	151-10-328-00-005000
20	25,4	10,16	12,7	20	151-10-420-00-003000	151-10-420-00-004000	151-10-420-00-005000
22	27,8	10,16	12,7	18	151-10-422-00-003000	151-10-422-00-004000	151-10-422-00-005000
24	30,4	10,16	12,7	16	151-10-424-00-003000	151-10-424-00-004000	151-10-424-00-005000
28	35,5	10,16	12,7	14	151-10-428-00-003000	151-10-428-00-004000	151-10-428-00-005000
32	40,6	10,16	12,7	12	151-10-432-00-003000	151-10-432-00-004000	151-10-432-00-005000
24	30,4	15,24	17,7	16	151-10-624-00-003000	151-10-624-00-004000	151-10-624-00-005000
28	35,5	15,24	17,7	14	151-10-628-00-003000	151-10-628-00-004000	151-10-628-00-005000
32	40,6	15,24	17,7	12	151-10-632-00-003000	151-10-632-00-004000	151-10-632-00-005000
36	45,7	15,24	17,7	11	151-10-636-00-003000	151-10-636-00-004000	151-10-636-00-005000
40	50,8	15,24	17,7	10	151-10-640-00-003000	151-10-640-00-004000	151-10-640-00-005000
42	53,3	15,24	17,7	9	151-10-642-00-003000	151-10-642-00-004000	151-10-642-00-005000
48	60,9	15,24	17,7	8	151-10-648-00-003000	151-10-648-00-004000	151-10-648-00-005000
50	63,5	15,24	17,7	8	151-10-650-00-003000	151-10-650-00-004000	151-10-650-00-005000
52	66,0	15,24	17,7	7	151-10-652-00-003000	151-10-652-00-004000	151-10-652-00-005000
50	63,5	22,86	25,3	8	151-10-950-00-003000	151-10-950-00-004000	151-10-950-00-005000
52	66,0	22,86	25,3	7	151-10-952-00-003000	151-10-952-00-004000	151-10-952-00-005000
64	81,2	22,86	25,3	6	151-10-964-00-003000	151-10-964-00-004000	151-10-964-00-005000

For RoHS compliance select ◇ plating code.

SPECIFY PLATING CODE XX=	10◇			
Pin Plating	0,25µm Au			

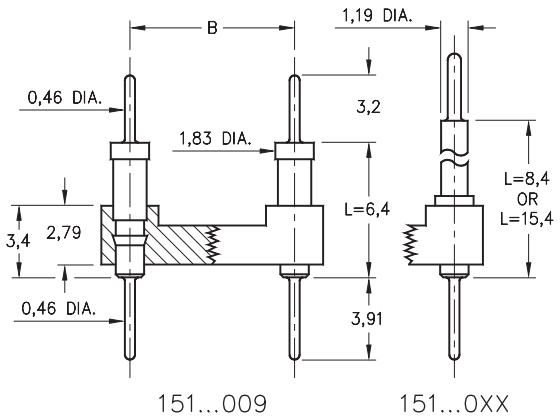

- Series 151 DIL Headers use 0,46 dia. solder tails at both ends make this header entirely pluggable.
- Series:
  151...009 use MM #5509 pins
  151...010 use MM #5510 pins
  151...011 use MM #5511 pins
  See pages 179 and 181 for details.
- Insulators are high temperature thermoplastic.

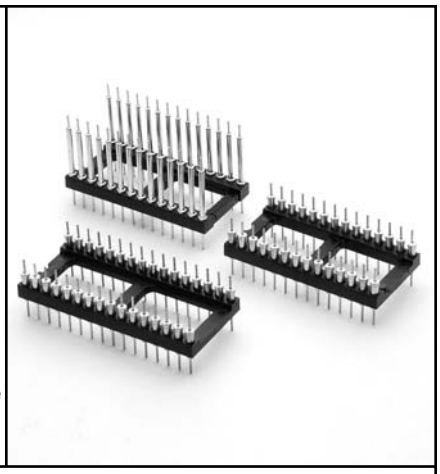

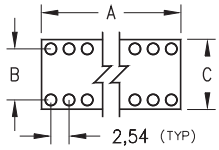

For Electrical, Mechanical & Enviromental Data, See pg. 4

Ordering Information

RoHS 2002/95/EC

Total number of pins	A	B	C	Quantity per tube	L = 6,4	L = 8,4	L = 15,4
10	12,6	5,08	7,6	41	151-10-210-00-009000	151-10-210-00-010000	151-10-210-00-011000
4	5,0	7,62	10,1	102	151-10-304-00-009000	151-10-304-00-010000	151-10-304-00-011000
6	7,6	7,62	10,1	67	151-10-306-00-009000	151-10-306-00-010000	151-10-306-00-011000
8	10,1	7,62	10,1	50	151-10-308-00-009000	151-10-308-00-010000	151-10-308-00-011000
10	12,6	7,62	10,1	40	151-10-310-00-009000	151-10-310-00-010000	151-10-310-00-011000
14	17,7	7,62	10,1	28	151-10-314-00-009000	151-10-314-00-010000	151-10-314-00-011000
16	20,3	7,62	10,1	25	151-10-316-00-009000	151-10-316-00-010000	151-10-316-00-011000
18	22,8	7,62	10,1	22	151-10-318-00-009000	151-10-318-00-010000	151-10-318-00-011000
20	25,3	7,62	10,1	20	151-10-320-00-009000	151-10-320-00-010000	151-10-320-00-011000
22	27,8	7,62	10,1	18	151-10-322-00-009000	151-10-322-00-010000	151-10-322-00-011000
24	30,4	7,62	10,1	16	151-10-324-00-009000	151-10-324-00-010000	151-10-324-00-011000
28	35,5	7,62	10,1	14	151-10-328-00-009000	151-10-328-00-010000	151-10-328-00-011000
20	25,4	10,16	12,7	20	151-10-420-00-009000	151-10-420-00-010000	151-10-420-00-011000
22	27,8	10,16	12,7	18	151-10-422-00-009000	151-10-422-00-010000	151-10-422-00-011000
24	30,4	10,16	12,7	16	151-10-424-00-009000	151-10-424-00-010000	151-10-424-00-011000
28	35,5	10,16	12,7	14	151-10-428-00-009000	151-10-428-00-010000	151-10-428-00-011000
32	40,6	10,16	12,7	12	151-10-432-00-009000	151-10-432-00-010000	151-10-432-00-011000
24	30,4	15,24	17,7	16	151-10-624-00-009000	151-10-624-00-010000	151-10-624-00-011000
28	35,5	15,24	17,7	14	151-10-628-00-009000	151-10-628-00-010000	151-10-628-00-011000
32	40,6	15,24	17,7	12	151-10-632-00-009000	151-10-632-00-010000	151-10-632-00-011000
36	45,7	15,24	17,7	11	151-10-636-00-009000	151-10-636-00-010000	151-10-636-00-011000
40	50,8	15,24	17,7	10	151-10-640-00-009000	151-10-640-00-010000	151-10-640-00-011000
42	53,3	15,24	17,7	9	151-10-642-00-009000	151-10-642-00-010000	151-10-642-00-011000
48	60,9	15,24	17,7	8	151-10-648-00-009000	151-10-648-00-010000	151-10-648-00-011000
50	63,5	15,24	17,7	8	151-10-650-00-009000	151-10-650-00-010000	151-10-650-00-011000
52	66,0	15,24	17,7	7	151-10-652-00-009000	151-10-652-00-010000	151-10-652-00-011000
50	63,5	22,86	25,3	8	151-10-950-00-009000	151-10-950-00-010000	151-10-950-00-011000
52	66,0	22,86	25,3	7	151-10-952-00-009000	151-10-952-00-010000	151-10-952-00-011000
64	81,2	22,86	25,3	6	151-10-964-00-009000	151-10-964-00-010000	151-10-964-00-011000

For RoHS compliance select ◇ plating code.

SPECIFY PLATING CODE XX=	10◇
Pin Plating	0,25µm Au

DUAL-IN-LINE PIN HEADERS
Interconnect
Open Frame

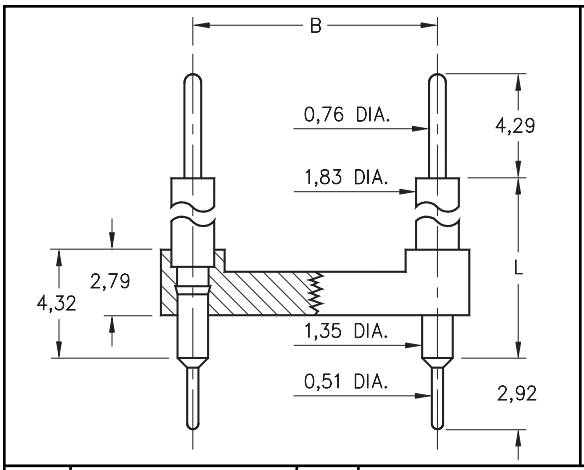

- Series 134 DIL Headers combine 0,76 diameter pins with pluggable 0,51 diameter solder tails.
- Series:
  134...020 use MM #3402 pins
  134...010 use MM #3401 pins
  134...050 use MM #3405 pins
  134...000 use MM #3400 pins
  134...100 use MM #3410 pins
  See pages 182 for details.
- Insulators are high temperature thermoplastic.

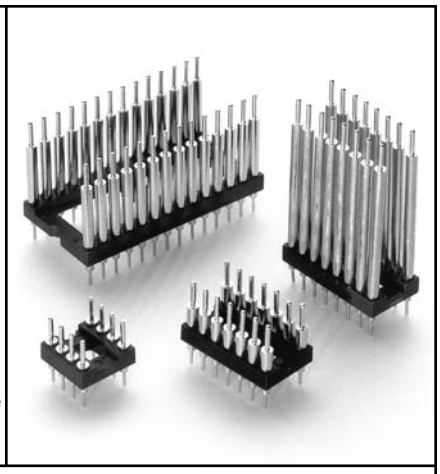

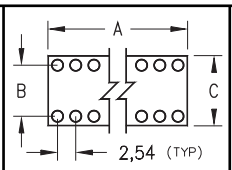

For Electrical, Mechanical & Enviromental Data, See pg. 4

Ordering Information

RoHS 2002/95/EC

Total number of pins	A	B	C	Quantity per tube	L = 4,83	L = 5,99	L = 8,0	L = 15,37	L = 27,18
10	12,6	5,08	7,6	41	134-10-210-00-020000	134-10-210-00-010000	134-10-210-00-050000	134-10-210-00-000000	134-10-210-00-100000
4	5,0	7,62	10,1	102	134-10-304-00-020000	134-10-304-00-010000	134-10-304-00-050000	134-10-304-00-000000	134-10-304-00-100000
6	7,6	7,62	10,1	67	134-10-306-00-020000	134-10-306-00-010000	134-10-306-00-050000	134-10-306-00-000000	134-10-306-00-100000
8	10,1	7,62	10,1	50	134-10-308-00-020000	134-10-308-00-010000	134-10-308-00-050000	134-10-308-00-000000	134-10-308-00-100000
10	12,6	7,62	10,1	40	134-10-310-00-020000	134-10-310-00-010000	134-10-310-00-050000	134-10-310-00-000000	134-10-310-00-100000
14	17,7	7,62	10,1	28	134-10-314-00-020000	134-10-314-00-010000	134-10-314-00-050000	134-10-314-00-000000	134-10-314-00-100000
16	20,3	7,62	10,1	25	134-10-316-00-020000	134-10-316-00-010000	134-10-316-00-050000	134-10-316-00-000000	134-10-316-00-100000
18	22,8	7,62	10,1	22	134-10-318-00-020000	134-10-318-00-010000	134-10-318-00-050000	134-10-318-00-000000	134-10-318-00-100000
20	25,3	7,62	10,1	20	134-10-320-00-020000	134-10-320-00-010000	134-10-320-00-050000	134-10-320-00-000000	134-10-320-00-100000
22	27,8	7,62	10,1	18	134-10-322-00-020000	134-10-322-00-010000	134-10-322-00-050000	134-10-322-00-000000	134-10-322-00-100000
24	30,4	7,62	10,1	16	134-10-324-00-020000	134-10-324-00-010000	134-10-324-00-050000	134-10-324-00-000000	134-10-324-00-100000
28	35,5	7,62	10,1	14	134-10-328-00-020000	134-10-328-00-010000	134-10-328-00-050000	134-10-328-00-000000	134-10-328-00-100000
20	25,4	10,16	12,7	20	134-10-420-00-020000	134-10-420-00-010000	134-10-420-00-050000	134-10-420-00-000000	134-10-420-00-100000
22	27,8	10,16	12,7	18	134-10-422-00-020000	134-10-422-00-010000	134-10-422-00-050000	134-10-422-00-000000	134-10-422-00-100000
24	30,4	10,16	12,7	16	134-10-424-00-020000	134-10-424-00-010000	134-10-424-00-050000	134-10-424-00-000000	134-10-424-00-100000
28	35,5	10,16	12,7	14	134-10-428-00-020000	134-10-428-00-010000	134-10-428-00-050000	134-10-428-00-000000	134-10-428-00-100000
32	40,6	10,16	12,7	12	134-10-432-00-020000	134-10-432-00-010000	134-10-432-00-050000	134-10-432-00-000000	134-10-432-00-100000
24	30,4	15,24	17,7	16	134-10-624-00-020000	134-10-624-00-010000	134-10-624-00-050000	134-10-624-00-000000	134-10-624-00-100000
28	35,5	15,24	17,7	14	134-10-628-00-020000	134-10-628-00-010000	134-10-628-00-050000	134-10-628-00-000000	134-10-628-00-100000
32	40,6	15,24	17,7	12	134-10-632-00-020000	134-10-632-00-010000	134-10-632-00-050000	134-10-632-00-000000	134-10-632-00-100000
36	45,7	15,24	17,7	11	134-10-636-00-020000	134-10-636-00-010000	134-10-636-00-050000	134-10-636-00-000000	134-10-636-00-100000
40	50,8	15,24	17,7	10	134-10-640-00-020000	134-10-640-00-010000	134-10-640-00-050000	134-10-640-00-000000	134-10-640-00-100000
42	53,3	15,24	17,7	9	134-10-642-00-020000	134-10-642-00-010000	134-10-642-00-050000	134-10-642-00-000000	134-10-642-00-100000
48	60,9	15,24	17,7	8	134-10-648-00-020000	134-10-648-00-010000	134-10-648-00-050000	134-10-648-00-000000	134-10-648-00-100000
50	63,5	15,24	17,7	8	134-10-650-00-020000	134-10-650-00-010000	134-10-650-00-050000	134-10-650-00-000000	134-10-650-00-100000
52	66,0	15,24	17,7	7	134-10-652-00-020000	134-10-652-00-010000	134-10-652-00-050000	134-10-652-00-000000	134-10-652-00-100000
50	63,5	22,86	25,3	8	134-10-950-00-020000	134-10-950-00-010000	134-10-950-00-050000	134-10-950-00-000000	134-10-950-00-100000
52	66,0	22,86	25,3	7	134-10-952-00-020000	134-10-952-00-010000	134-10-952-00-050000	134-10-952-00-000000	134-10-952-00-100000
64	81,2	22,86	25,3	6	134-10-964-00-020000	134-10-964-00-010000	134-10-964-00-050000	134-10-964-00-000000	134-10-964-00-100000

For RoHS compliance select ◇ plating code.

PLATING CODE =	10◇			
Pin Plating	0,25µm Au			

DUAL-IN-LINE HEADERS
Interconnect
Open Frame

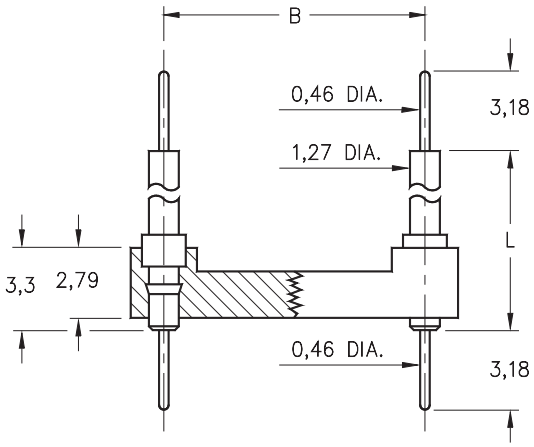

- Series 142 DIL Headers have double ended 0,46 diameter pluggable solder tails.
- Used to interconnect PC Boards with spacings of 5,33, 8,51, 14,86 or 21,21. Series 142 use MM #4259-1, -2, -3 or -4 pins. See page 179 for details.
- Insulators are high temperature thermoplastic.

Ordering Information

Total number of pins	A	B	C	Quantity per tube	L=5,33	L=8,51	L=14,86	L=21,21
6	7,6	7,62	10,1	67	142-XX-306-00-591000	142-XX-306-00-592000	142-XX-306-00-593000	142-XX-306-00-594000
8	10,1	7,62	10,1	50	142-XX-308-00-591000	142-XX-308-00-592000	142-XX-308-00-593000	142-XX-308-00-594000
14	17,7	7,62	10,1	29	142-XX-314-00-591000	142-XX-314-00-592000	142-XX-314-00-593000	142-XX-314-00-594000
16	20,3	7,62	10,1	25	142-XX-316-00-591000	142-XX-316-00-592000	142-XX-316-00-593000	142-XX-316-00-594000
18	22,8	7,62	10,1	22	142-XX-318-00-591000	142-XX-318-00-592000	142-XX-318-00-593000	142-XX-318-00-594000
20	25,3	7,62	10,1	40	142-XX-320-00-591000	142-XX-320-00-592000	142-XX-320-00-593000	142-XX-320-00-594000
24	30,4	7,62	10,1	17	142-XX-324-00-591000	142-XX-324-00-592000	142-XX-324-00-593000	142-XX-324-00-594000
22	27,8	10,16	12,7	14	142-XX-422-00-591000	142-XX-422-00-592000	142-XX-422-00-593000	142-XX-422-00-594000
24	30,4	15,24	17,7	16	142-XX-624-00-591000	142-XX-624-00-592000	142-XX-624-00-593000	142-XX-624-00-594000
28	35,5	15,24	17,7	14	142-XX-628-00-591000	142-XX-628-00-592000	142-XX-628-00-593000	142-XX-628-00-594000
32	40,6	15,24	17,7	12	142-XX-632-00-591000	142-XX-632-00-592000	142-XX-632-00-593000	142-XX-632-00-594000
40	50,8	15,24	17,7	10	142-XX-640-00-591000	142-XX-640-00-592000	142-XX-640-00-593000	142-XX-640-00-594000

For Electrical, Mechanical & Enviromental Data, See pg. 4

XX=Plating Code See Below

For RoHS compliance select ◇ plating code.

RoHS 2002/95/EC

SPECIFY PLATING CODE XX=	10◇		90		40◇		
Pin Plating	0,25µm Au		5,08µm Sn/Pb		5,08µm Sn		

DUAL-IN-LINE HEADERS
Surface Mount, Gull Wing
Open Frame

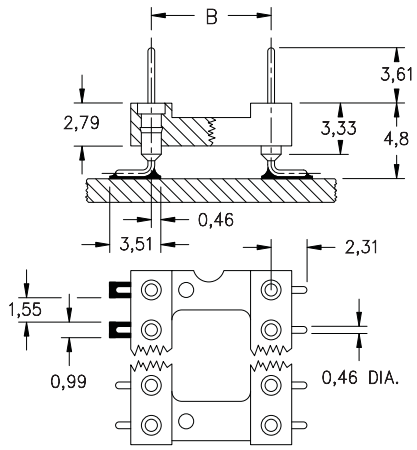

- Surface mount Gull Wing DIP sockets for devices featuring 2,54 lead spacing.
- Gull wing terminals for max. strength and easy in-circuit test.
- Series 150 use MM #3404 pins. See page 179 for details.
- Insulators are high temperature thermoplastic.

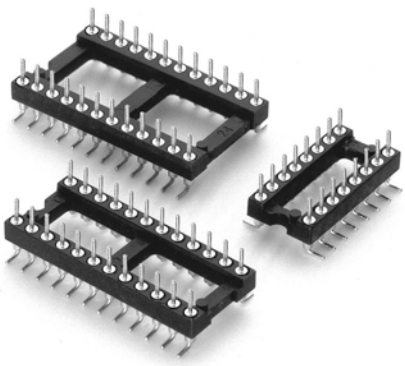

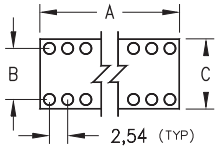

Ordering Information

Total number of pins	A	B	C	Quantity per tube	Ordering Information
10	12,6	5,08	7,62	40	150-10-210-00-106000
4	5,0	7,62	10,1	102	150-10-304-00-106000
6	7,6	7,62	10,1	67	150-10-306-00-106000
8	10,1	7,62	10,1	50	150-10-308-00-106000
10	12,6	7,62	10,1	40	150-10-310-00-106000
14	17,7	7,62	10,1	29	150-10-314-00-106000
16	20,3	7,62	10,1	25	150-10-316-00-106000
18	22,8	7,62	10,1	22	150-10-318-00-106000
20	25,3	7,62	10,1	20	150-10-320-00-106000
22	27,8	7,62	10,1	18	150-10-322-00-106000
24	30,4	7,62	10,1	16	150-10-324-00-106000
28	35,5	7,62	10,1	14	150-10-328-00-106000
20	25,4	10,16	12,7	20	150-10-420-00-106000
22	27,8	10,16	12,7	18	150-10-422-00-106000
24	30,4	10,16	12,7	16	150-10-424-00-106000
28	35,5	10,16	12,7	14	150-10-428-00-106000
32	40,6	10,16	12,7	12	150-10-432-00-106000
24	30,4	15,24	17,7	16	150-10-624-00-106000
28	35,5	15,24	17,7	14	150-10-628-00-106000
32	40,6	15,24	17,7	12	150-10-632-00-106000
36	45,7	15,24	17,7	11	150-10-636-00-106000
40	50,8	15,24	17,7	10	150-10-640-00-106000
42	53,3	15,24	17,7	9	150-10-642-00-106000
48	60,9	15,24	17,7	8	150-10-648-00-106000
50	63,5	15,24	17,7	8	150-10-650-00-106000
52	66,0	15,24	17,7	7	150-10-652-00-106000
50	63,5	22,86	25,3	8	150-10-950-00-106000
52	66,0	22,86	25,3	7	150-10-952-00-106000
64	81,2	22,86	25,3	6	150-10-964-00-106000

For Electrical, Mechanical & Enviromental Data, See pg. 4

RoHS 2002/95/EC

For RoHS compliance select ◇ plating code.

Coplanarity 0,13. For Pin Counts >20 positions consult Technical Support.

PLATING CODE =	10◇
Pin Plating	0,25µm Au

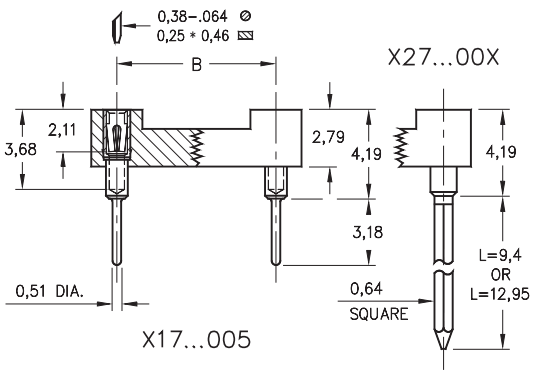

- High density DIP sockets and strips for devices featuring 1,78 lead spacing.
- Solder tails use MM #1802 receptacles, See page 140 for details. Wraposts use MM # 1702-2 or 1703-3 receptacles, See page 166 for details.
- Receptacles use Hi-Rel, 4-finger #30 contact and 6-finger #43 contact, both rated at 3 amps. See pages 218 & 220.
- Insulators are high temp. thermoplastic.

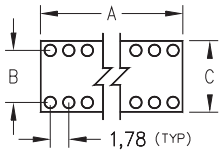

Ordering Information

For Electrical, Mechanical & Enviromental Data, See pg. 4

XX=Plating Code See Below

Total number of pins	A	B	C	Quantity per tube	Solder Tail	2 Level Wrapost L = 9,4	3 Level Wrapost L = 12,95
					OPEN FRAME DIP SOCKET		
16	14,53	7,62	9,91	35	117-XX-316-41-005000	127-XX-316-41-002000	127-XX-316-41-003000
28	25,2	10,16	12,45	20	117-XX-428-41-005000	127-XX-428-41-002000	127-XX-428-41-003000
30	26,97	10,16	12,45	18	117-XX-430-41-005000	127-XX-430-41-002000	127-XX-430-41-003000
48	42,98	10,16	12,45	12	117-XX-448-41-005000	127-XX-448-41-002000	127-XX-448-41-003000
20	18,08	15,24	17,53	28	117-XX-620-41-005000	127-XX-620-41-002000	127-XX-620-41-003000
28	25,2	15,24	17,53	20	117-XX-628-41-005000	127-XX-628-41-002000	127-XX-628-41-003000
40	35,86	15,24	17,53	14	117-XX-640-41-005000	127-XX-640-41-002000	127-XX-640-41-003000
42	37,64	15,24	17,53	13	117-XX-642-41-005000	127-XX-642-41-002000	127-XX-642-41-003000
48	42,98	15,24	17,53	11	117-XX-648-41-005000	127-XX-648-41-002000	127-XX-648-41-003000
52	46,53	15,24	17,53	11	117-XX-652-41-005000	127-XX-652-41-002000	127-XX-652-41-003000
56	50,1	15,24	17,53	10	117-XX-656-41-005000	127-XX-656-41-002000	127-XX-656-41-003000
64	57,2	15,24	17,53	8	117-XX-664-41-005000	127-XX-664-41-002000	127-XX-664-41-003000
68	60,76	15,24	17,53	8	117-XX-668-41-005000	127-XX-668-41-002000	127-XX-668-41-003000
64	57,2	19,05	21,34	8	117-XX-764-41-005000	127-XX-764-41-002000	127-XX-764-41-003000
					CLOSED FRAME DIP SOCKET		
64	57,2	19,05	21,34	8	217-XX-764-41-005000	227-XX-764-41-002000	227-XX-764-41-003000
					SINGLE ROW STRIP SOCKET If desired, we will supply any length up to 21 pins.		
21	37,64				317-93-121-41-005000	327-XX-121-41-002000	327-XX-121-41-003000

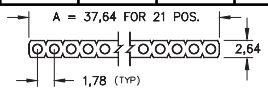

For RoHS compliance select ◇ plating code.

SPECIFY PLATING CODE XX=			93			43◇	
Sleeve (Pin)			5,08µm Sn/Pb			5,08µmSn	
Contact (Clip)			0,76µm Au			0,76µm Au	

DUAL-IN-LINE SOCKETS
Gull Wing Shrink DIP Sockets & Strips
Surface Mount Solder Tail

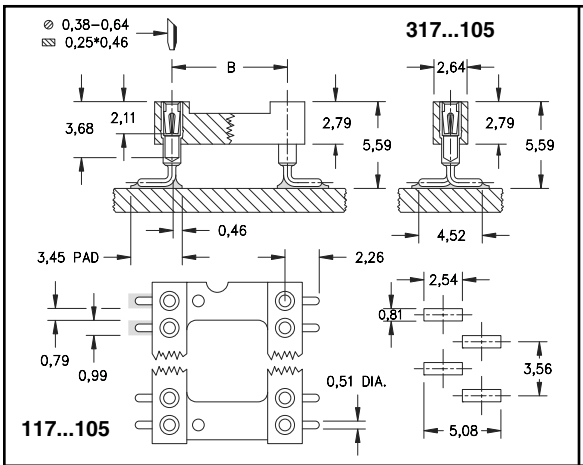

- Surface mount Gull Wing DIP sockets for devices featuring 1,78 lead spacing.
- Gull wing terminals for max. strength and easy in-circuit test.
- Hi-Rel, 4-finger BeCu #30 contact is rated at 3 amps. See page 218 for details.
- Series 117 and 317 use MM #1802 pins. See page 140 for details.
- Insulators are high temperature thermoplastic.

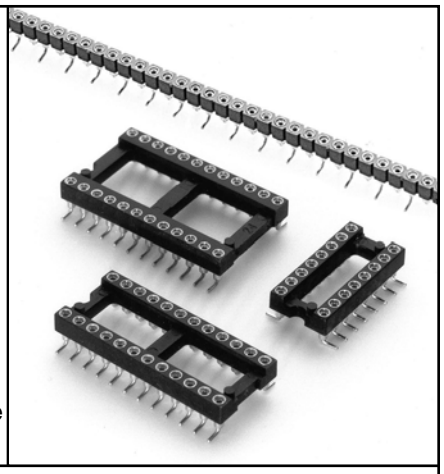

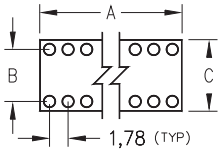

Ordering Information

Total number of pins	A	B	C	Quantity per tube	Ordering Information
16	14,53	7,62	9,91	35	117-XX-316-41-105000
28	25,20	10,16	12,45	20	117-XX-428-41-105000
30	26,97	10,16	12,45	18	117-XX-430-41-105000
48	42,98	10,16	12,45	12	117-XX-448-41-105000
20	18,08	15,24	17,53	28	117-XX-620-41-105000
28	25,20	15,24	17,53	20	117-XX-628-41-105000
40	35,86	15,24	17,53	14	117-XX-640-41-105000
42	37,64	15,24	17,53	13	117-XX-642-41-105000
48	42,98	15,24	17,53	12	117-XX-648-41-105000
52	46,53	15,24	17,53	11	117-XX-652-41-105000
56	50,09	15,24	17,53	10	117-XX-656-41-105000
64	57,20	15,24	17,53	9	117-XX-664-41-105000
68	60,76	15,24	17,53	8	117-XX-668-41-105000
64	57,20	19,05	21,34	8	117-XX-764-41-105000

RoHS 2002/95/EC

For RoHS compliance select ◇ plating code.

For Electrical, Mechanical & Enviromental Data, See pg. 4

XX=Plating Code See Below

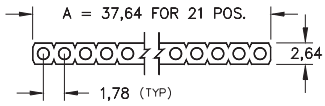

SINGLE ROW STRIP HEADER

If desired, we will supply any length up to 21 pins.

21	37,64	- - -	2,64	-	317-XX-121-41-105000

Coplanarity 0,13. For Pin Counts >10 positions consult Technical Support.

SPECIFY PLATING CODE XX=	13◇		93			43◇	
Sleeve (Pin)	0,25µm Au		5,08µm Sn/Pb			5,08µm Sn	
Contact (Clip)	0,76µm Au		0,76µm Au			0,76µm Au	

DUAL-IN-LINE HEADERS
Shrink DIP Headers and Strips
Solder Tail

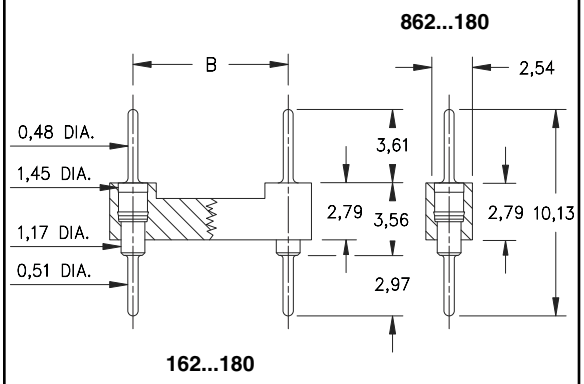

- High density DIP headers and strips for devices featuring 1,78 lead spacing.
- Series 162 DIP headers use MM #6218 pins. See page 175 for details.
- Series 862 strip headers use MM #6218 pins. See page 175 for details.
- Insulators are high temperature thermoplastic.

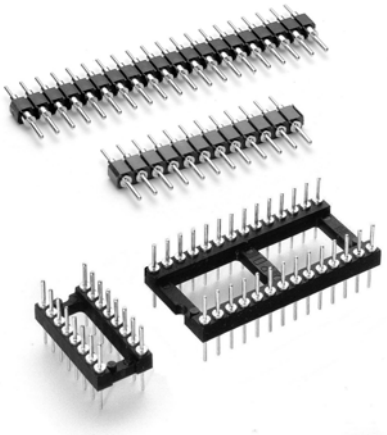

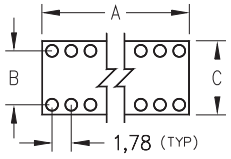

Ordering Information

Total number of pins	A	B	C	Quantity per tube	
16	14,53	7,62	9,91	35	162-XX-316-00-180000
28	25,20	10,16	12,45	20	162-XX-428-00-180000
30	26,97	10,16	12,45	18	162-XX-430-00-180000
48	42,98	10,16	12,45	12	162-XX-448-00-180000
20	18,08	15,24	17,53	28	162-XX-620-00-180000
28	25,20	15,24	17,53	20	162-XX-628-00-180000
40	35,86	15,24	17,53	14	162-XX-640-00-180000
42	37,64	15,24	17,53	13	162-XX-642-00-180000
48	42,98	15,24	17,53	12	162-XX-648-00-180000
52	46,53	15,24	17,53	11	162-XX-652-00-180000
56	50,09	15,24	17,53	10	162-XX-656-00-180000
64	57,20	15,24	17,53	9	162-XX-664-00-180000
68	60,76	15,24	17,53	8	162-XX-668-00-180000
64	57,20	19,05	21,34	8	162-XX-764-00-180000

RoHS 2002/95/EC

For RoHS compliance select ◇ plating code.

For Electrical, Mechanical & Enviromental Data, See pg. 4

XX=Plating Code See Below

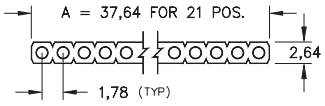

SINGLE ROW STRIP HEADER

If desired, we will supply any length up to 21 pins.

21	37,64	- - -	2,64	-	862-XX-121-00-180000

SPECIFY PLATING CODE XX=	10◇	90	40◇
Pin Plating	0,25µm Au	5,08µm Sn/Pb	5,08µm Sn

DUAL-IN-LINE HEADERS
Gull Wing Shrink DIP Headers and Strips
Surface Mount Solder Tail

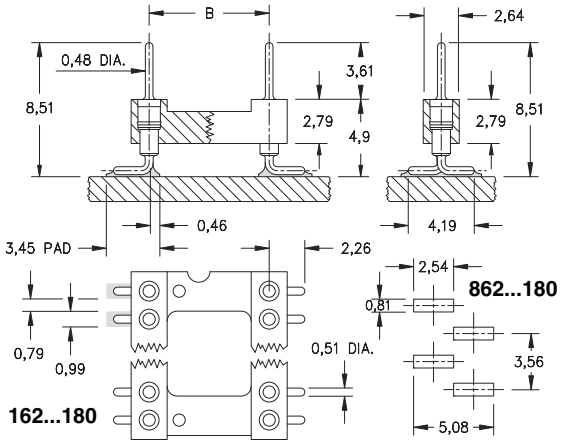

- Surface mount Gull Wing DIP sockets and strips for devices featuring 1,78 lead spacing.
- Gull wing terminals for max. strength and easy in-circuit test.
- Series 162 and Series 862 use MM #6218 pins. See page 175 for details.
- Insulators are high temperature thermoplastic.

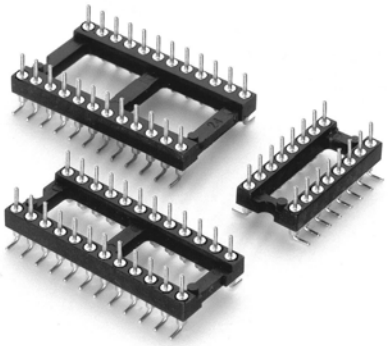

Ordering Information

Total number of pins	A	B	C	Quantity per tube	
16	14,53	7,62	9,91	35	162-XX-316-30-180000
28	25,20	10,16	12,45	20	162-XX-428-30-180000
30	26,97	10,16	12,45	18	162-XX-430-30-180000
48	42,98	10,16	12,45	12	162-XX-448-30-180000
20	18,08	15,24	17,53	28	162-XX-620-30-180000
28	25,20	15,24	17,53	20	162-XX-628-30-180000
40	35,86	15,24	17,53	14	162-XX-640-30-180000
42	37,64	15,24	17,53	13	162-XX-642-30-180000
48	42,98	15,24	17,53	12	162-XX-648-30-180000
52	46,53	15,24	17,53	11	162-XX-652-30-180000
56	50,09	15,24	17,53	10	162-XX-656-30-180000
64	57,20	15,24	17,53	9	162-XX-664-30-180000
68	60,76	15,24	17,53	8	162-XX-668-30-180000
64	57,20	19,05	21,34	8	162-XX-764-30-180000

RoHS 2002/95/EC

For RoHS compliance select ◇ plating code.

For Electrical, Mechanical & Enviromental Data, See pg. 4

XX=Plating Code See Below

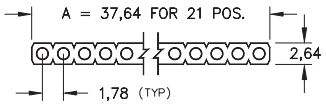

SINGLE ROW STRIP SMT HEADER

If desired, we will supply any length up to 21 pins.

21	37,64	- - -	2,64	-	862-XX-121-30-180000

Coplanarity 0,13. For Pin Counts >10 positions consult Technical Support.

SPECIFY PLATING CODE XX=	10◇	90	40◇
Pin Plating	0,25µm Au	5,08µm Sn/Pb	5,08µm Sn

DUAL-IN-LINE SOCKETS
Right Angle Mount
Closed Frame

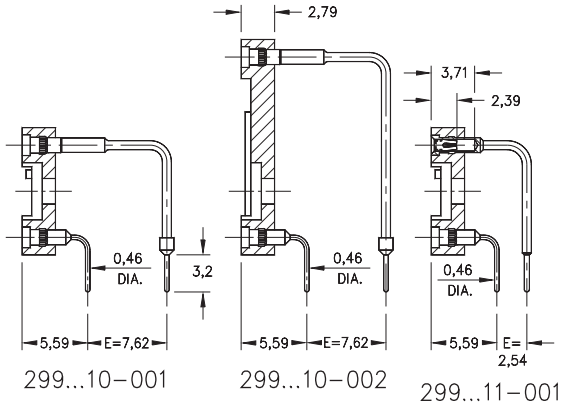

- For components to be mounted perpendicularly to the PCB, such as LED displays.
- Horizontal mount solder tails are available with either 7,62 (standard) or 2,54 row spacing.
- Series 299 use MM #1103/0903, #1103/1610 or #1103/0904 pins. See pages 137 & 138 for details.
- Hi-Rel, 4-finger BeCu #30 contact is rated at 3 amps. See page 218 for details.
- Insulators are high temperature thermoplastic.

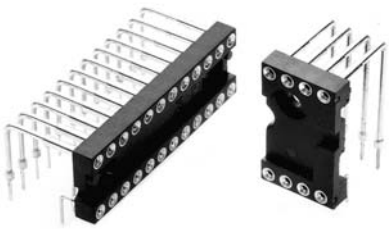

Ordering Information

Total number of pins	A	B	C	Quantity per tube	E=7,62	E=2,54
6	7,6	7,62	10,1		299-XX-306-10-001000	299-XX-306-11-001000
8	10,1	7,62	10,1		299-XX-308-10-001000	299-XX-308-11-001000
10	12,6	7,62	10,1		299-XX-310-10-001000	299-XX-310-11-001000
12	15,2	7,62	10,1	33	299-XX-312-10-001000	299-XX-312-11-001000
14	17,7	7,62	10,1	29	299-XX-314-10-001000	299-XX-314-11-001000
16	20,3	7,62	10,1	25	299-XX-316-10-001000	299-XX-316-11-001000
18	22,8	7,62	10,1	22	299-XX-318-10-001000	299-XX-318-11-001000
20	25,3	7,62	10,1	20	299-XX-320-10-001000	299-XX-320-11-001000
24	30,4	7,62	10,1	16	299-XX-324-10-001000	299-XX-324-11-001000
8	10,1	15,24	17,7	50	299-XX-608-10-002000	
10	12,6	15,24	17,7	40	299-XX-610-10-002000	
12	15,2	15,24	17,7	34	299-XX-612-10-002000	
14	17,7	15,24	17,7	28	299-XX-614-10-002000	
16	20,3	15,24	17,7	25	299-XX-616-10-002000	
18	22,8	15,24	17,7	22	299-XX-618-10-002000	
20	25,3	15,24	17,7	20	299-XX-620-10-002000	
22	27,8	15,24	17,7	18	299-XX-622-10-002000	
24	30,4	15,24	17,7	16	299-XX-624-10-002000	
26	33,0	15,24	17,7	15	299-XX-626-10-002000	
28	35,5	15,24	17,7	14	299-XX-628-10-002000	
30	38,1	15,24	17,7	13	299-XX-630-10-002000	
32	40,6	15,24	17,7	12	299-XX-632-10-002000	
36	45,7	15,24	17,7	11	299-XX-636-10-002000	
40	50,8	15,24	17,7	10	299-XX-640-10-002000	

For Electrical, Mechanical & Enviromental Data, See pg. 4

XX=Plating Code See Below

For RoHS compliance select ◇ plating code.

RoHS 2002/95/EC

SPECIFY PLATING CODE XX=			93			43◇	
Sleeve (Pin)			5,08µm Sn/Pb			5,08µm Sn	
Contact (Clip)			0,76µm Au			0,76µm Au	

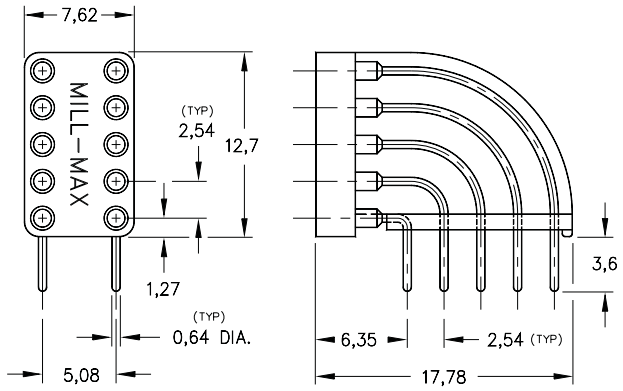

Fig. 1

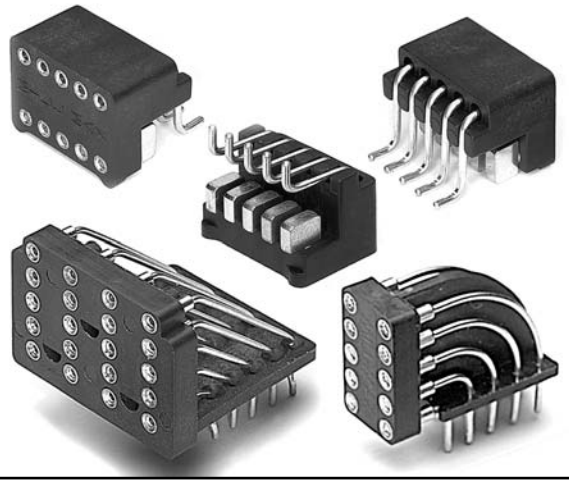

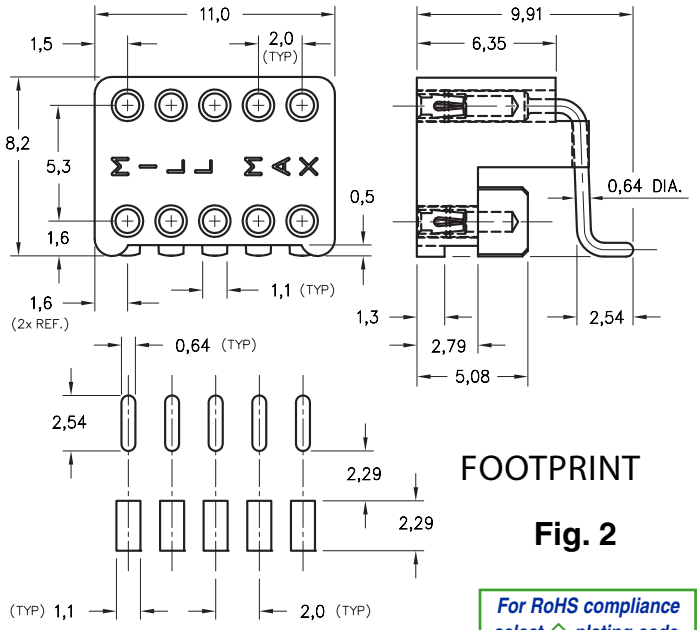

FOOTPRINT

Fig. 2

For RoHS compliance select ◇ plating code.

- Series 296, 299 & 594 vertical display sockets are used to mount dot matrix and 7-segment LED displays at the edge of and perpendicular to a printed circuit board. This positions the display directly behind the translucent front panel of the equipment.
- Series 299 & 594 are through hole mount and can be wave or intrusive reflow soldered.
- Series 296 is surface mount and can be supplied on carrier tape for automated "pick 'n place" assembly.
- Insulators are high temp. Nylon 46, suitable for all soldering processes including "lead-free".

Fig.	No. of pins	Ordering Information
1	10	**299-99-210-12-001800** Plating Code RoHS 2002/95/EC
2	10	**296-XX-010-30-691800** (Discrete sockets) **296-XX-010-30-692800** (Supplied on 24mm wide carrier tape per EIA-481: 450 per 330 reel)
3	20	**594-XX-020-01-007032** Plating Code RoHS 2002/95/EC

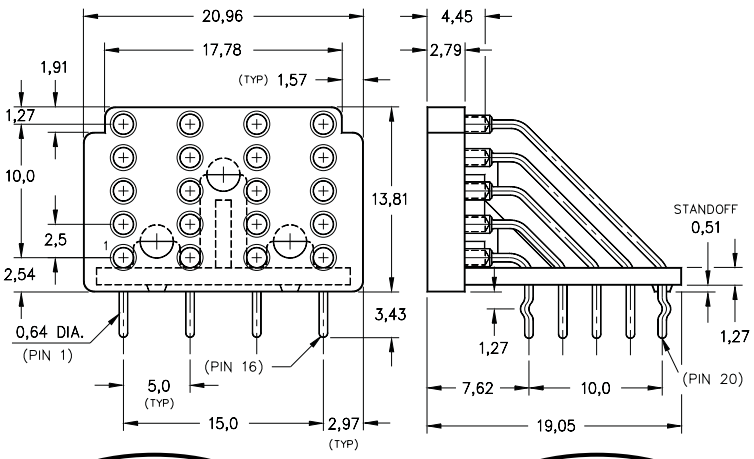

For Electrical, Mechanical & Enviromental Data, See pg. 4

Fig. 3

XX=Plating Code See Below

SPECIFY PLATING CODE XX=	99	44◇
Sleeve (Pin)	5,08µm Sn/Pb	5,08µm Sn
Contact (Clip)	5,08µm Sn/Pb	5,08µm Sn

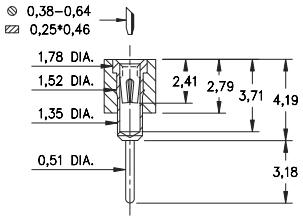

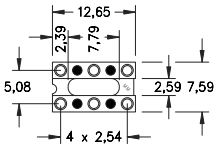

Fig. 1

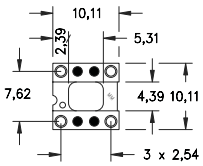

Fig. 2

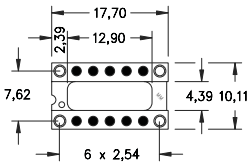

Fig. 3

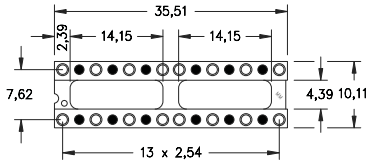

Fig. 4

○ = Loaded Position ● = Empty Position

- Relay sockets accept devices with I/O pins on 2,54 grid.
- Additional Relay DIP socket patterns are available on Page 64.
- Zig-Zag strip sockets are suitable for IC's and memory chips with staggered double row patterns.
- Series 110 and 410 use MM #1001 receptacles. See page 136 for details.
- Receptacles use Hi-Rel, 4 finger #30 BeCu contact rated at 3 amps. See page 218 for details.
- Insulators are high temp. thermoplastic.

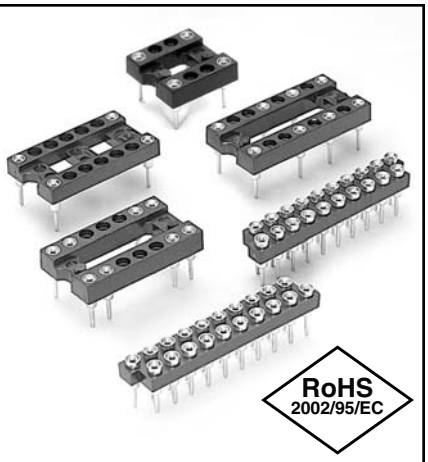

Selectively Loaded Sockets For Dual-In-Line Relays

	No. of pins	Ordering Information
Fig. 1	6	110-XX-210-10-001000
Fig. 2	4	110-XX-308-10-001000
Fig. 3	4	110-XX-314-10-001000
Fig. 4	16	110-XX-328-10-001000

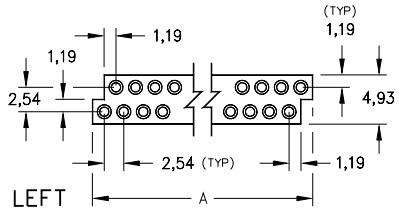

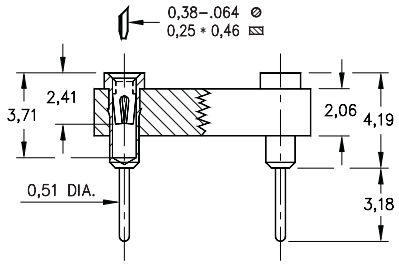

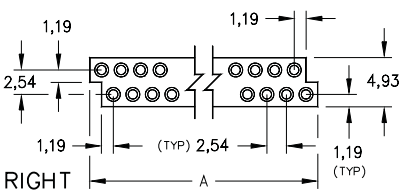

Staggered (Zig-Zag) Strip Sockets

Dim 'A'	No. of pins	Insulator Body	Ordering Information
18,97	14	Left, Stackable	410-93-214-10-001000
18,97	14	Right, Stackable	410-93-214-10-002000
21,51	16	Left, Stackable	410-93-216-10-001000
21,51	16	Right, Stackable	410-93-216-10-002000
26,59	20	Left, Stackable	410-93-220-10-001000
26,59	20	Right, Stackable	410-93-220-10-002000
31,67	24	Left, Stackable	410-93-224-10-001000
31,67	24	Right, Stackable	410-93-224-10-002000
36,75	28	Left, Stackable	410-93-228-10-001000
36,75	28	Right, Stackable	410-93-228-10-002000

For Electrical, Mechanical & Enviromental Data, See pg. 4

XX=Plating Code See Below

For RoHS compliance select ◇ plating code.

SPECIFY PLATING CODE XX=	13◇		93			43◇	
Sleeve (Pin)	0,25µm Au		5,08µm Sn/Pb			5,08µm Sn	
Contact (Clip)	0,76µm Au		0,76µm Au			0,76µm Au	

DUAL-IN-LINE SOCKETS
Selectively Loaded Relay DIP Sockets
Solder Tail

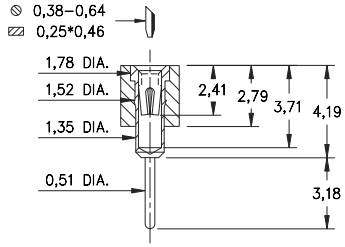

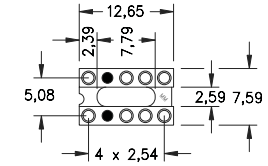

Fig. 1

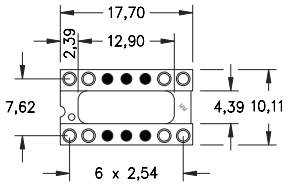

Fig. 2

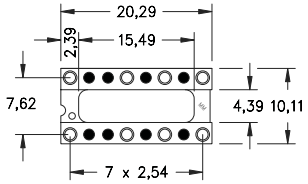

Fig. 3

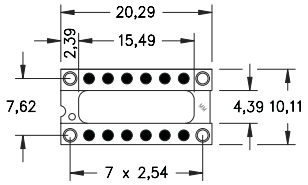

Fig. 4

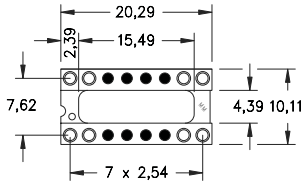

Fig. 5

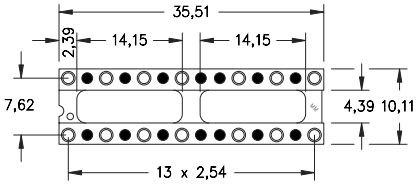

Fig. 6

○ = Loaded Position ● = Empty Position

- Relay sockets accept devices with I/O pins on 2,54 grid.
- Additional Relay DIP socket patterns are available on Page 63.
- Series 110 use MM #1001 receptacles. See page 136 for details.
- Receptacles use Hi-Rel, 4 finger #30 BeCu contact rated at 3 amps. See page 218 for details.
- Insulators are high temp. thermoplastic.

Ordering Information

Fig. 1	Series 110...002	8 Position Relay Socket
	110-XX-210-10-002000	
Fig. 2	Series 110...002	8 Position Relay Socket
	110-XX-314-10-002000	
Fig. 3	Series 110...003	8 Position Relay Socket
	110-XX-316-10-003000	
Fig. 4	Series 110...004	4 Position Relay Socket
	110-XX-316-10-004000	
Fig. 5	Series 110...005	8 Position Relay Socket
	110-XX-316-10-005000	
Fig. 6	Series 110...002	14 Position Relay Socket
	110-XX-328-10-002000	

For Electrical, Mechanical & Enviromental Data, See pg. 4

XX=Plating Code See Below

For RoHS compliance select ◇ plating code.

SPECIFY PLATING CODE XX=	13◇		93			43◇	
Sleeve (Pin)	0,25µm Au		5,08µm Sn/Pb			5,08µmSn	
Contact (Clip)	0,76µm Au		0,76µm Au			0,76µm Au	

SIP SOCKETS, HEADERS AND CARRIERS
QUICK SELECTOR CHART

USE THIS CONVENIENT CHART TO SELECT THE RIGHT SIP INTERCONNECT FOR YOUR APPLICATION

1) Determine the style of pin needed to meet your requirement.
2) Select the appropriate insulator frame, pitch and grid spacing.
3) Turn to indicated page for detail and ordering information.
4) For custom assembly in a selected insulator, contact our applications engineers.

SINGLE & DOUBLE ROW SIP SOCKETS, HEADERS AND CARRIERS

Select Pin	0,38mm - 0,64mm Pins								0,64mm - 0,94mm & 0,64mm Sq. Pins									0,94-1,09 mm Pins	Slotted, Turret, Solder Cup		Socket Carriers		
	Vertical Socket	*Right Angle Socket*	*Vertical Pin*	*Right Angle Pin*	*Surface Mount Pin*	*Surface Mount Socket*	*1-4 Level Wrapost Socket*	*Pluggable Wrapost Socket*	*0,51/0,76 Elevated Solder Tail Pin*	*Surface Mount Socket & Headers*	*Solderless Press-fit Socket*	*Solderless Press-fit Pin*	*Vertical Socket*	*OFP Pass Through Socket*	*Right Angle Socket*	*Vertical Pin*	*Right Angle Pin*	*Vertical Socket*	*Solder Tail*	*Wrapost Tail*	*Solder Tail*	*Low Profile*	*Ultra Low Profile*
1,27mm Grid Single Row	66	67	66	67	68 69	68 69																	
1,27mm Grid Double Row	66	67	66	67	68	68																	
2mm Grid Single Row	70	72	70	72	71	71																	
2mm Grid Double Row	70	72	70	72	71	71																	
5,08mm Grid Single Row													88		88		88						
2,54mm Grid Single Row	73 79 89 91 97	73	73 79 102 103 106	73	76 77 78	69 76 77 78	93	95	105	77 85	83	83	80 81	87	81	80 81	81	86	75 108	110	99	100	101
2,54mm Grid Double Row	74 79 90 92 98	74	74 79 102 104 107	74	76 78	76 78	94	96		85	84	84	80 82	87	82	80 82	82	86	75 109	111	99	100	101

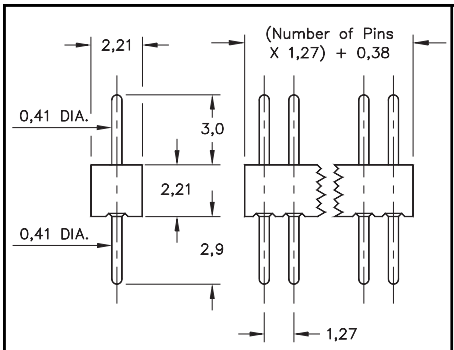

Fig. 1

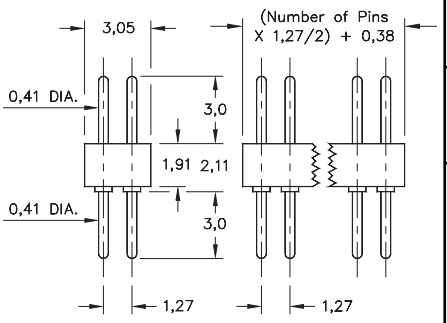

Fig. 2

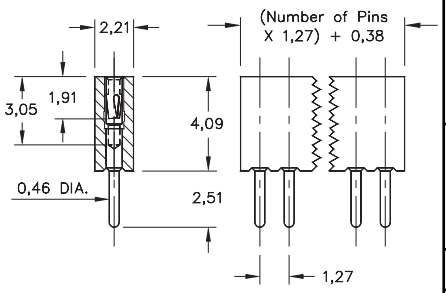

Fig. 3

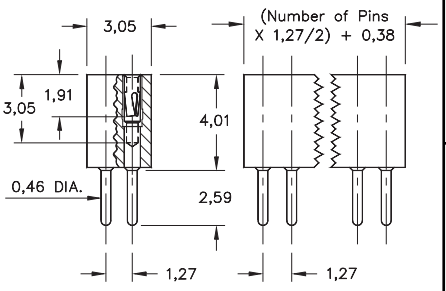

Fig. 4

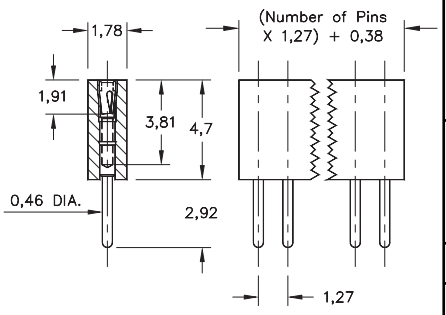

Fig. 5

- Series 850 single and double row interconnects have 1,27 pin spacing & permit board stacking as low as 6,3.
- Pin headers have 0,41 dia. pins (MM #4006-0). See page 175 for details.
- MM #0467 and MM #4890 receptacles use Hi-Rel, 3-finger BeCu #11 contacts rated at 3 amps. (#11 contact accepts pin diameters from 0,38 - 0,51). See pages 129 and 131 for details.
- Insulators are high temp. thermoplastic, suitable for all soldering operations.

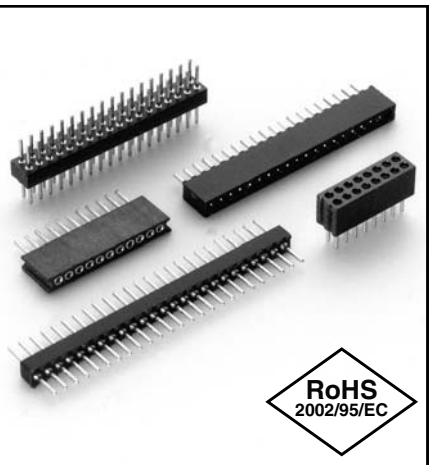

Ordering Information

Fig. 1	**Single Row**	**2,21 Profile Pin Header**
	850-XX-0_ _-10-001000	
	Specify # of pins →	01-50
Fig. 2	**Double Row**	**1,91 Profile Pin Header**
	852-XX-_ _ _-10-001000	
	Specify # of pins →	002-100

For Electrical, Mechanical & Enviromental Data, See pg. 4

XX=Plating Code See Below

For RoHS compliance select ◇ plating code.

SPECIFY PLATING CODE XX=	10◇	90	40◇
Pin Plating	0,25µm Au	5,08µm Sn/Pb	5,08µm Sn

Fig. 3	**Single Row**	**4,09 Profile Socket**
	851-XX-0_ _-10-001000	
	Specify # of pins →	01-50
Fig. 4	**Double Row**	**4,09 Profile Socket**
	853-XX-_ _ _-10-001000	
	Specify # of pins →	002-100
Fig. 5	**Single Row**	**4,7 Profile Socket**
	851-XX-0_ _-10-002000	
	Specify # of pins →	01-77

For Electrical, Mechanical & Enviromental Data, See pg. 4

XX=Plating Code See Below

For RoHS compliance select ◇ plating code.

SPECIFY PLATING CODE XX=			93	99		43◇	
Sleeve (Pin)			5,08µm Sn/Pb	5,08µm Sn/Pb		5,08µm Sn	
Contact (Clip)			0,76µm Au	5,08µm Sn/Pb		0,76µm Au	

SINGLE-IN-LINE SOCKETS
1,27 Grid Long Tail Sockets
Single and Double Row

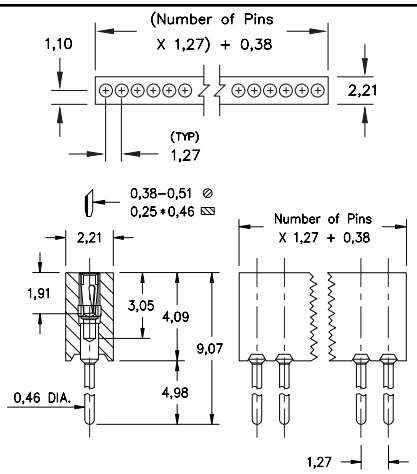

Fig. 1

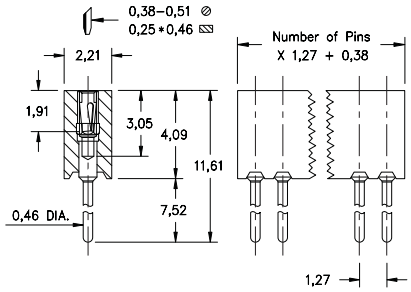

Fig. 2

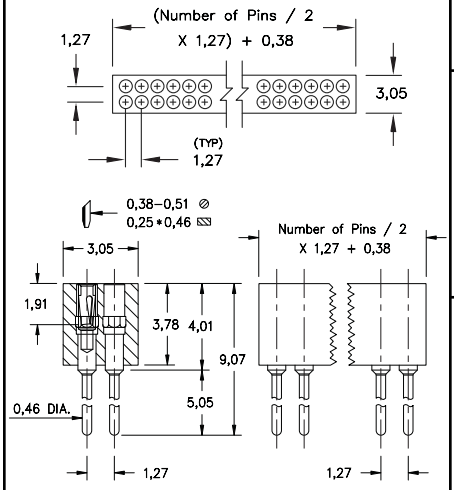

Fig. 3

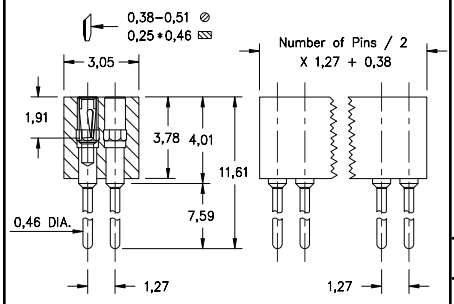

Fig. 4

- Series 851_011 and 853_011 use MM #4890-1 pins. See page 131 for details.
- Series 851_021 and 853_021 use MM #4890-2 pins. See page 131 for details.
- Receptacles use Hi-Rel, 3-finger BeCu #11 contacts rated at 3 amps. (#11 contact accepts pin diameters from 0,38 - 0,51). See page 217 for details.
- Insulators are high temp. thermoplastic, suitable for all soldering operations.

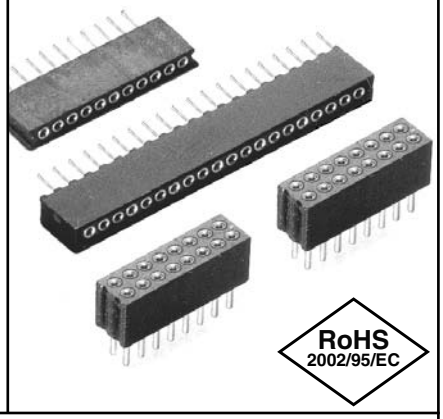

Ordering Information

Fig. 1	**Series 851...011**	**Single Row Socket**
	851-43-0_ _-10-011000	
	Specify # of pins →	01-50
Fig. 2	**Series 851...021**	**Single Row Socket**
	851-43-0_ _-10-021000	
	Specify # of pins →	01-50
Fig. 3	**Series 853...011**	**Double Row Socket**
	853-43-_ _ _-10-011000	
	Specify # of pins →	004-100
Fig. 4	**Series 853...021**	**Double Row Socket**
	853-43-_ _ _-10-021000	
	Specify # of pins →	004-100

For Electrical, Mechanical & Enviromental Data, See pg. 4

XX=Plating Code See Below

For RoHS compliance select ◇ plating code.

SPECIFY PLATING CODE XX=						43◇	
Sleeve (Pin)						5,08µmSn	
Contact (Clip)						0,76µm Au	

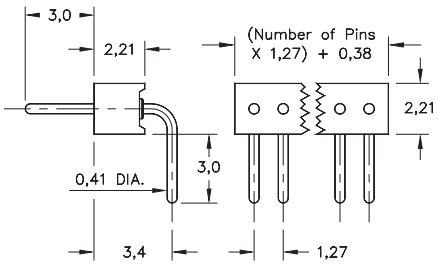

Fig. 1

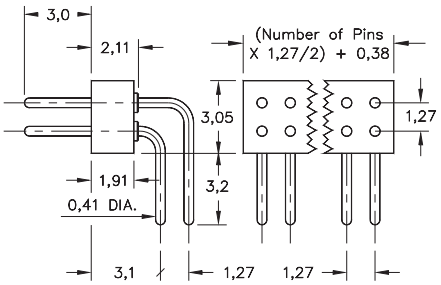

Fig. 2

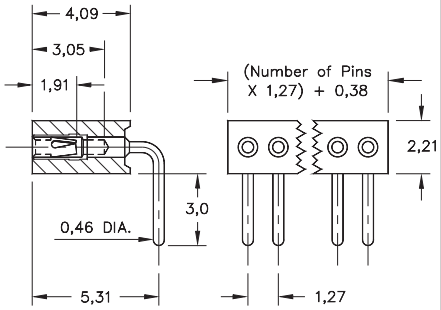

Fig. 3

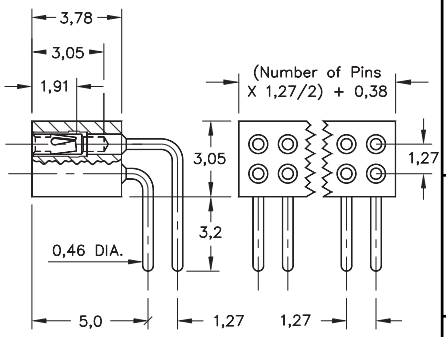

Fig. 4

- Series 850 and 851 interconnects are available in single and double row form.
- 850 & 852 series headers use MM #4006-1 and #4006-2 pins. See page 175 details.
- 851 & 853 series sockets use MM #4890-1 and #4890-2 receptacles, that accept pin diameters from 0,38 - 0,53 See page 131 for details.
- Insulators are high temp. thermoplastic.

Ordering Information

Fig. 1 — **Single Row** — **Right Angle Pin Header**

850-XX-0_ _-20-001000

Specify # of pins → 01-50

Fig. 2 — **Double Row** — **Right Angle Pin Header**

852-XX-_ _ _-20-001000

Specify # of pins → 002-100

For Electrical, Mechanical & Enviromental Data, See pg. 4

XX=Plating Code See Below

For RoHS compliance select ◇ plating code.

SPECIFY PLATING CODE XX=	10◇	90	40◇
Pin Plating	0,25µm Au	5,08µm Sn/Pb	5,08µm Sn

Fig. 3 — **Single Row** — **Right Angle Socket**

851-XX-0_ _-20-001000

Specify # of pins → 01-50

Fig. 4 — **Double Row** — **Right Angle Socket**

853-XX-_ _ _-20-001000

Specify # of pins → 002-100

For Electrical, Mechanical & Enviromental Data, See pg. 4

XX=Plating Code See Below

For RoHS compliance select ◇ plating code.

SPECIFY PLATING CODE XX=			93	99		43◇	
Sleeve (Pin)			5,08µm Sn/Pb	5,08µm Sn/Pb		5,08µm Sn	
Contact (Clip)			0,76µm Au	5,08µm Sn/Pb		0,76µm Au	

For RoHS compliance select ◇ plating code.

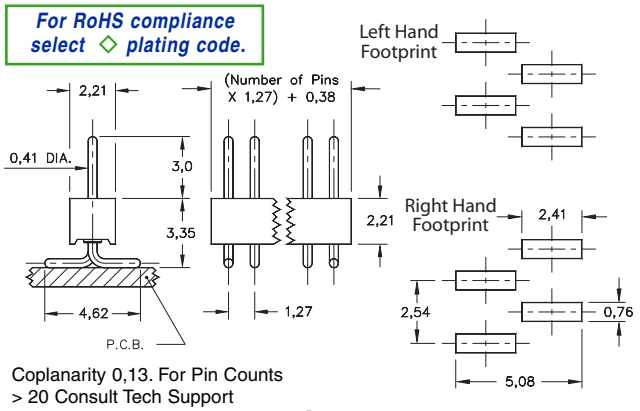

Coplanarity 0,13. For Pin Counts > 20 Consult Tech Support

Fig. 1

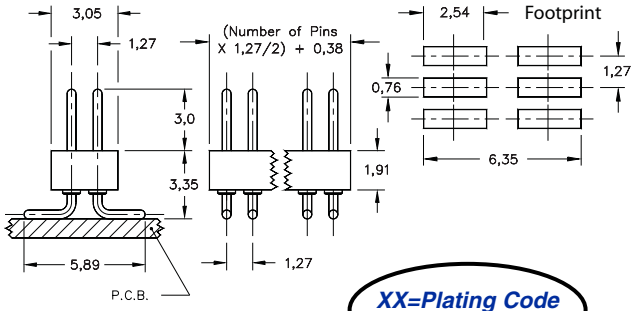

XX=Plating Code See Below

Coplanarity 0,13. For Pin Counts > 40 Consult Tech Support

Fig. 2

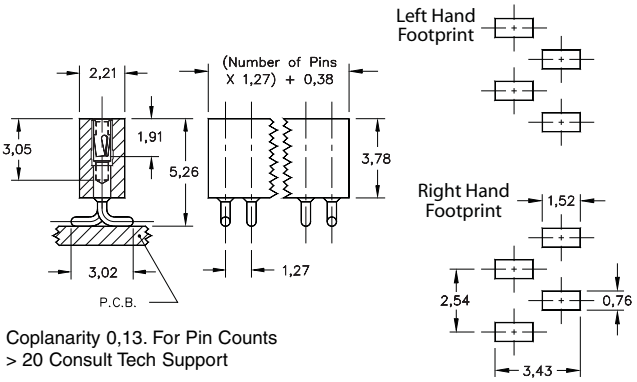

Coplanarity 0,13. For Pin Counts > 20 Consult Tech Support

Fig. 3

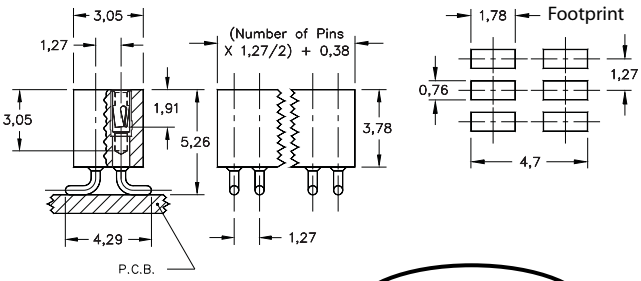

Coplanarity 0,13. For Pin Counts > 40 Consult Tech Support

For Electrical, Mechanical & Enviromental Data, See pg. 4

Fig. 4

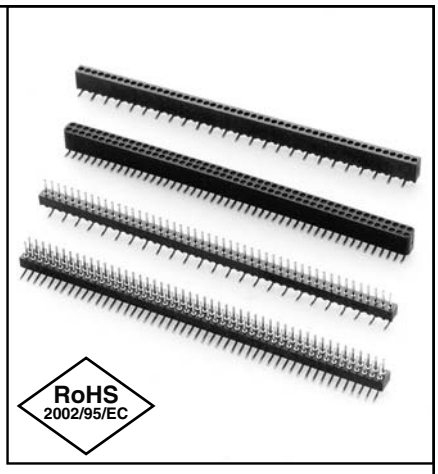

- Single row interconnects having an even number of pins are now available with a left or right hand footprint.
- Headers (850 & 852) use MM# 4006 pins. See page 175 for details.
- Sockets (851 & 853) use MM# 4890-0 receptacles and accept pin diameters from 0,38 - 0,53. See page 131 for details.
- Coplanarity 0,13 (Single Row max 20 pins; Double Row max 40 pins). For higher pin counts contact techical support .
- Insulators are high temp. thermoplastic.

Ordering Information

Fig. 1L	**Single Row Header, Left Hand Footprint Odd or Even # of pins**			
	850-XX-0_ _-30-001000			
	Specify # of pins → 01-50			
Fig. 1R	**Single Row Header, Right Hand Footprint Even # of pins**			
	850-XX-0_ _-30-002000			
	Specify even # of pins → 02-50			
Fig. 2	**Double Row Header, Even # of pins**			
	852-XX-_ _ _-30-001000			
	Specify even # of pins → 004-100			
SPECIFY PLATING CODE XX=		10◇	90	40◇
Pin Plating		0,25µm Au	5,08µm Sn/Pb	5,08µm Sn
Fig. 3L	**Single Row Socket, Left Hand Footprint Odd or Even # of pins**			
	★ 44 Plating Non-Standard 851-XX-0_ _-30-001000			
	Specify # of pins → 01-50			
Fig. 3R	**Single Row Socket, Right Hand Footprint Even # of pins**			
	851-XX-0_ _-30-002000			
	Specify even # of pins → 02-50			
Fig. 4	**Double Row Socket, Even # of pins**			
	★ 44 Plating Non-Standard 853-XX-_ _ _-30-001000			
	Specify even # of pins → 004-100			

SPECIFY PLATING CODE XX=		93	99	43◇	44◇
Sleeve (Pin)		5,08µm Sn/Pb	5,08µmSn/Pb	5,08µm Sn	5,08µm Sn
Contact (Clip)		0,76µm Au	5,08µmSn/Pb	0,76µm Au	5,08µm Sn

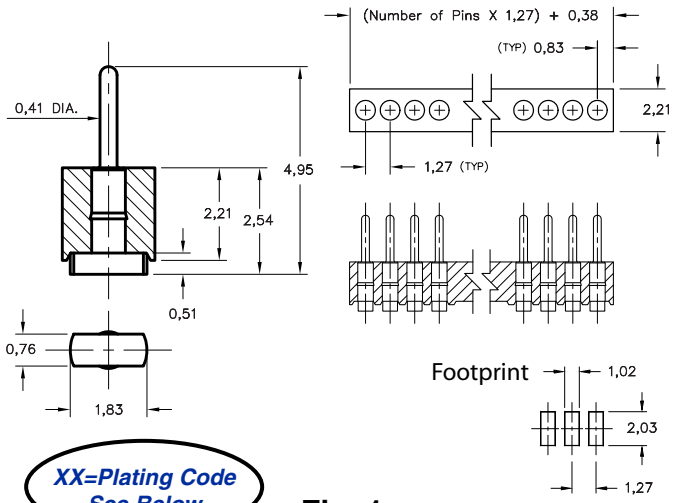

XX=Plating Code See Below

Fig. 1

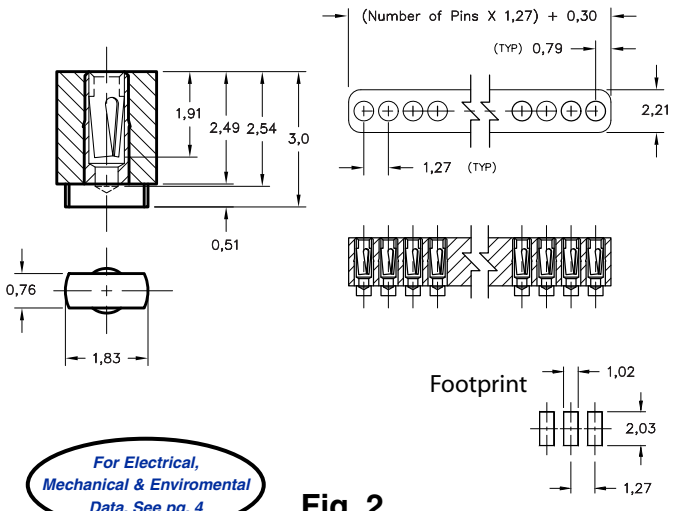

For Electrical, Mechanical & Enviromental Data, See pg. 4

Fig. 2

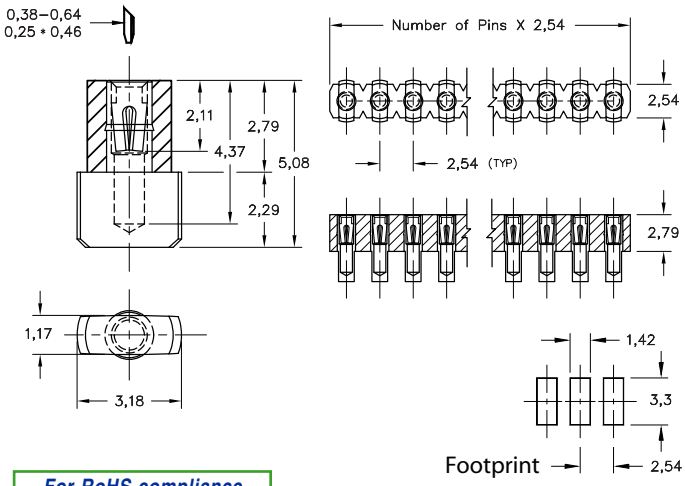

For RoHS compliance select ◇ plating code.

Fig. 3

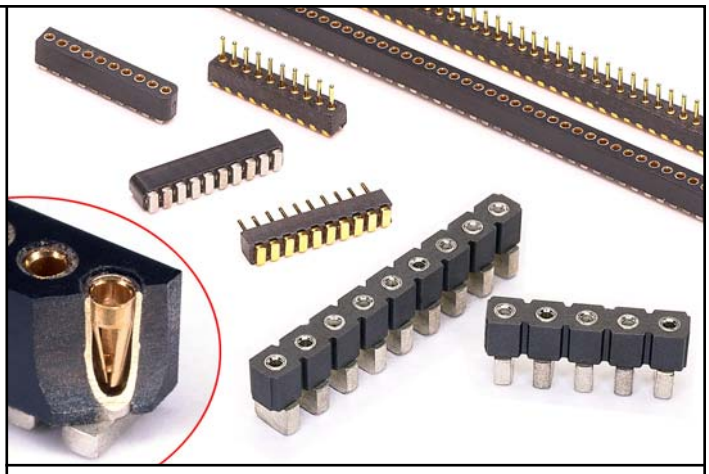

- Series 340 and 399 interconnects are single row headers and sockets having unique surface mount "block" terminals.
- "Block" termination makes the interconnects "self-standing". This also minimizes profile and reduces the footprint compared with traditional "gull wing" designs.
- Series 399 is a matched pair of 1,27 pitch sockets and headers with a mated height of only 5,54.
- Series 340 is a 2,54 pitch SIP socket using Mill-Max #30 contact (Data on page 218). The profile is only 5,08.
- Insulators are high temp. thermoplastic, suitable for all soldering processes.

RoHS 2002/95/EC

Ordering Information

Fig. 1	**Single Row Header, 1,27 Grid**		
	399-10-0XX-00-310000 **Plating Code** **Specify # of pins** 02-50		
	PLATING CODE	10◇	
	Pin Plating	0,25µm Au	
Fig. 2	**Single Row Socket, 1,27 Grid**		
	399-XX-0XX-21-300000 **Plating Code** **Specify # of pins** 02-50		
	SPECIFY PLATING CODE XX=	91	41◇
	Sleeve (Pin)	5,08µm Sn/Pb	5,08µm Sn
	Contact (Clip)	0,25µm Au	0,25µm Au
Fig. 3	**Single Row Socket, 2,54 Grid**		
	340-XX-1XX-30-780100 **Plating Code** **Specify # of pins** 02-64		
	SPECIFY PLATING CODE XX=	99	44◇
	Sleeve (Pin)	5,08µm Sn/Pb	5,08µm Sn
	Contact (Clip)	5,08µm Sn/Pb	5,08µm Sn

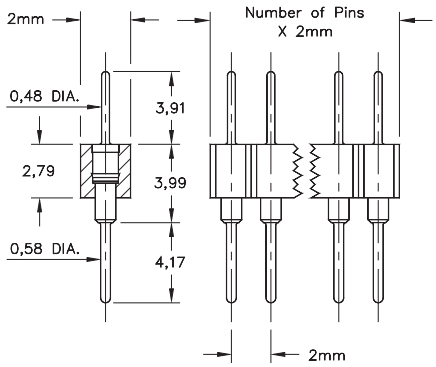

Fig. 1

- Series 830 single and double row interconnects have 2mm pin spacing and permit board stacking as low as 8,18.
- Pin headers (830 & 832 series) use MM #5012 pins. See page 175 for details.
- Sockets (831 & 833 series) use MM #1802 receptacles and accept pin diameters from 0,38 - 0,64. See page 140 for details.
- Insulators are high temp. thermoplastic, suitable for all soldering operations.

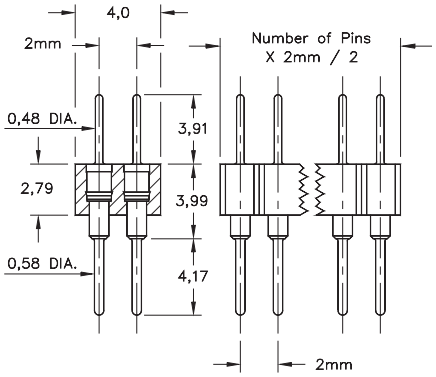

Fig. 2

Ordering Information

Fig. 1	**Single Row Pin Header** 830-XX-0_ _-10-001000 **Specify # of pins** → 01-50
Fig. 2	**Double Row Pin Header** 832-XX-_ _ _-10-001000 **Specify # of pins** → 002-100

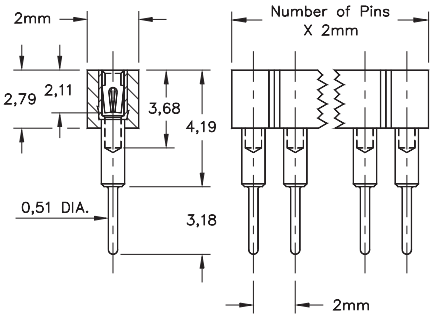

Fig. 3

For Electrical, Mechanical & Enviromental Data, See pg. 4

XX=Plating Code See Below

For RoHS compliance select ◇ plating code.

SPECIFY PLATING CODE XX=	10◇	90	40◇	
Pin Plating	0,25µm Au	5,08µm Sn/Pb	5,08µm Sn	

Fig. 3	**Single Row Socket** 831-XX-0_ _-10-001000 **Specify # of pins** → 01-50
Fig. 4	**Double Row Socket** 833-XX-_ _ _-10-001000 **Specify # of pins** → 002-100

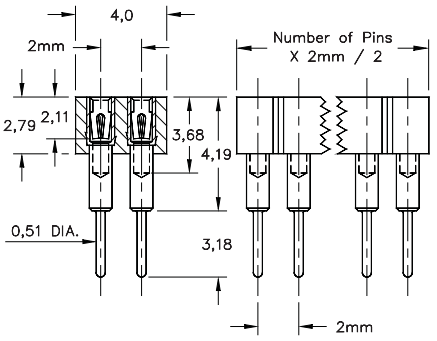

Fig. 4

For Electrical, Mechanical & Enviromental Data, See pg. 4

XX=Plating Code See Below

For RoHS compliance select ◇ plating code.

SPECIFY PLATING CODE XX=			93			43◇	
Sleeve (Pin)			5,08µm Sn/Pb			5,08µm Sn	
Contact (Clip)			0,76µm Au			0,76µm Au	

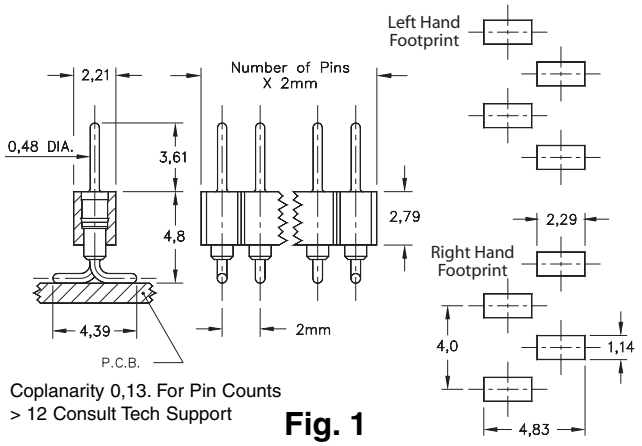

Coplanarity 0,13. For Pin Counts > 12 Consult Tech Support

Fig. 1

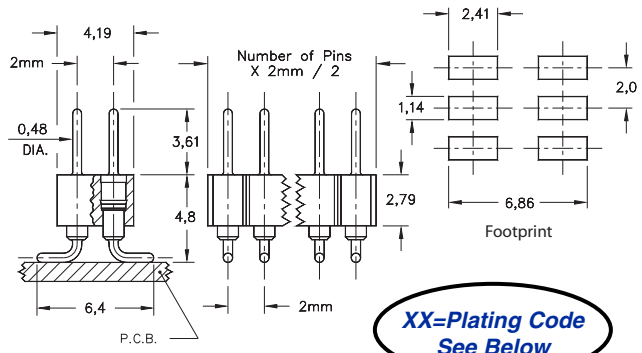

XX=Plating Code See Below

Coplanarity 0,13. For Pin Counts > 24 Consult Tech Support

Fig. 2

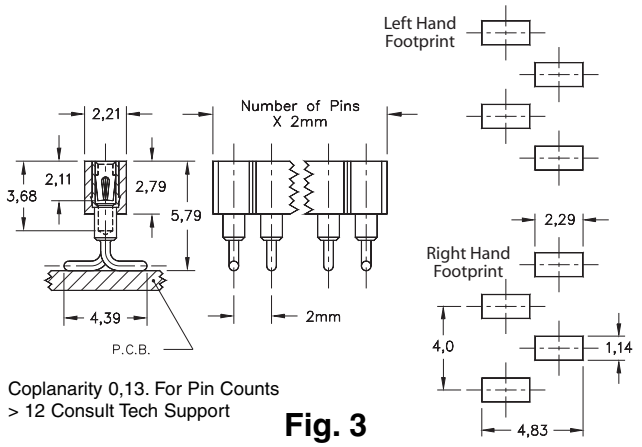

Coplanarity 0,13. For Pin Counts > 12 Consult Tech Support

Fig. 3

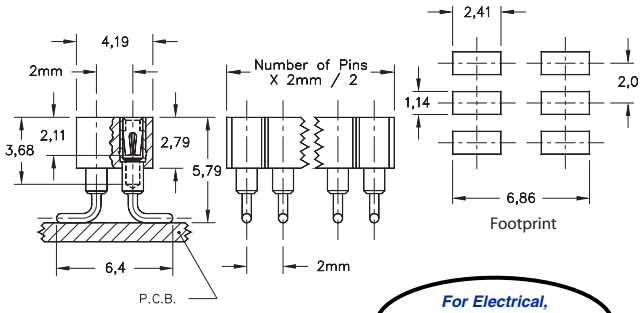

For Electrical, Mechanical & Enviromental Data, See pg. 4

Coplanarity 0,13. For Pin Counts > 24 Consult Tech Support

Fig. 4

- Headers (830 & 832) use MM# 6218 pins. See page 175 for details.
- Sockets (831 & 833) use MM# 1802 receptacles and accept pin diameters from 0,38-0,64. See page 140 for details.
- Coplanarity 0,13 (Single Row max 12 pins; Double Row max 24 pins) for higher pin counts contact technical support.
- Insulators are high temp. thermoplastic.

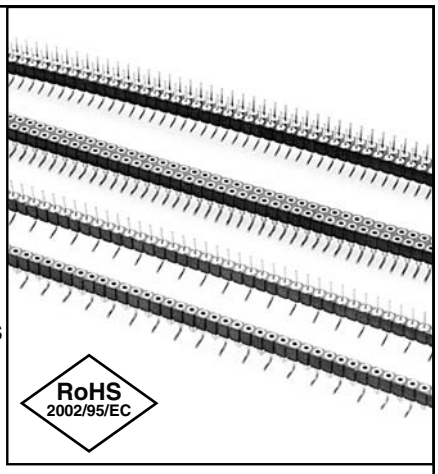

For RoHS compliance select ◇ plating code.

Ordering Information

Fig. 1L	**Single Row Header, Left Hand Footprint Odd or Even # of pins** 830-XX-0_ _-30-001000 **Specify # of pins** → 01-50
Fig. 1R	**Single Row Header, Right Hand Footprint Even # of pins** 830-XX-0_ _-30-002000 **Specify even # of pins** → 02-50
Fig. 2	**Double Row Header, Even # of pins** 832-XX-_ _ _-30-001000 **Specify even # of pins** → 004-100

SPECIFY PLATING CODE XX=	10◇	90	40◇
Pin Plating	0,25µm Au	5,08µm Sn/Pb	5,08µm Sn

Fig. 3L	**Single Row Socket, Left Hand Footprint Odd or Even # of pins** 831-XX-0_ _-30-001000 **Specify # of pins** → 01-50
Fig. 3R	**Single Row Socket, Right Hand Footprint Even # of pins** 831-XX-0_ _-30-002000 **Specify even # of pins** → 02-50
Fig. 4	**Double Row Socket, Even # of pins** 833-XX-_ _ _-30-001000 **Specify even # of pins** → 004-100

SPECIFY PLATING CODE XX=		93		43◇	
Sleeve (Pin)		5,08µm Sn/Pb		5,08µm Sn	
Contact (Clip)		0,76µm Au		0,76µm Au	

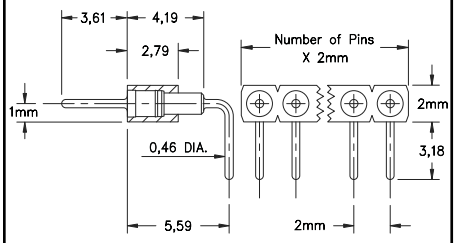

Fig. 1

- Series 830 & 832 use MM #3790 & MM #3796 pins. See page 176 for details.
- Series 831 & 833 use MM #1805 and MM #3805 receptacles and accept pin diameters from 0,38 - 0,64. See page 140 for details.
- Receptacles use Hi-Rel, 6 finger BeCu #43 contact rated at 3 amps. See page 220 for details.
- Insulators are high temp. thermoplastic.

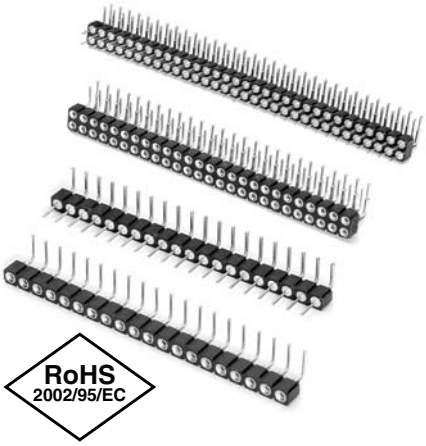

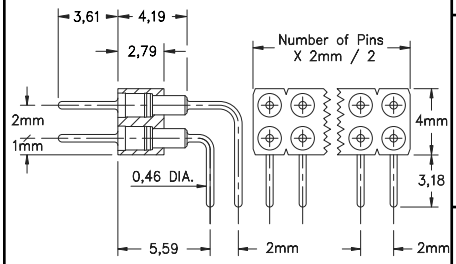

Fig. 2

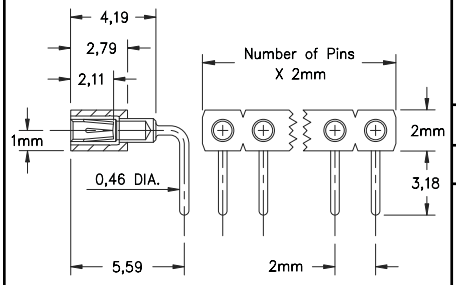

Fig. 3

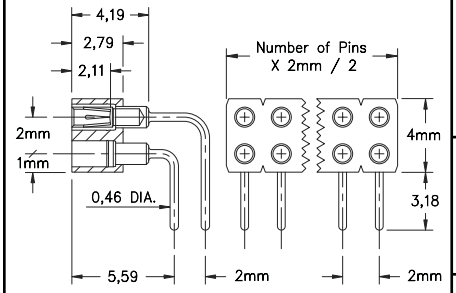

Fig. 4

Ordering Information

Fig. 1 — 830...001 Single Row Right Angle Header

830-10-0_ _-20-001000

Specify # of pins → 01-50

Fig. 2 — 832...001 Double Row Right Angle Header

832-10-_ _ _-20-001000

Specify # of pins → 002-100

For Electrical, Mechanical & Enviromental Data, See pg. 4

For RoHS compliance select ◇ plating code.

PLATING CODE =	10◇			
Pin Plating	0,25µm Au			

Fig. 3 — 831...001 Single Row Right Angle Socket

831-43-0 _ _-20-001000

Specify # of pins → 01-50

Fig. 4 — 833...001 Double Row Right Angle Socket

833-43-_ _ _-20-001000

Specify # of pins → 002-100

For Electrical, Mechanical & Enviromental Data, See pg. 4

For RoHS compliance select ◇ plating code.

PLATING CODE =						43◇	
Sleeve (Pin)						5,08µm Sn	
Contact (Clip)						0,76µm Au	

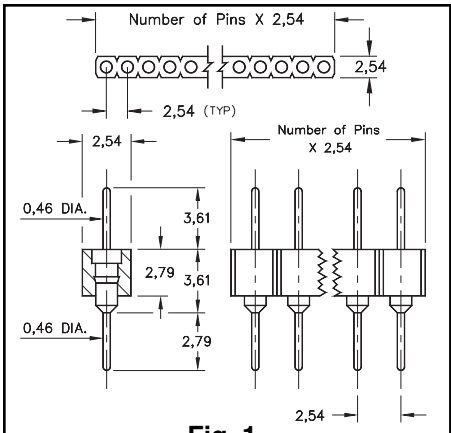

Fig. 1

- Series 3XX are available with straight and right angle solder tails.
- Series 350 & 399...009 use MM #3404 and #5011 pins. See pages 179 & 181 for details.
- Series 301, 310 & 399...003 use MM #0156, #1001 & #1103 receptacles. See pages 136 & 137 for details.
- Receptacles use Hi-Rel, 4 finger #30 BeCu contact rated at 3 amps. See page 218 for details.
- Insulators are high temp. thermoplastic.

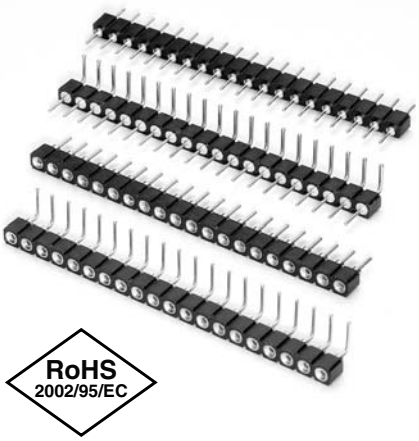

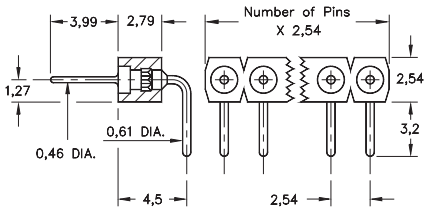

Fig. 2

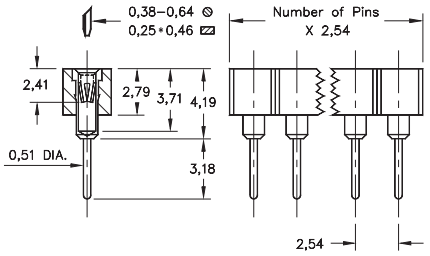

Fig. 3

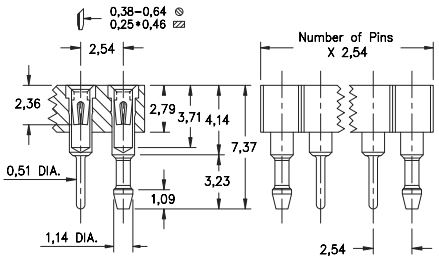

Fig. 4

★ 41, 91 & 99 Platings Non-Standard

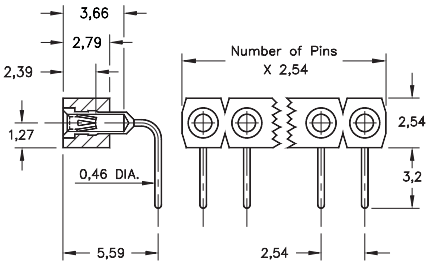

Fig. 5

Ordering Information

Fig. 1	**Series 350...006**	**Straight Pin Header**
	350-XX-1_ _-00-006000	
	Specify # of pins →	01-64
Fig. 2	**Series 399...009**	**Right Angle Pin Header**
	399-XX-1_ _-10-009000	
	Specify # of pins →	02-64

For Electrical, Mechanical & Enviromental Data, See pg. 4

XX=Plating Code See Below

For RoHS compliance select ◇ plating code.

SPECIFY PLATING CODE XX=	10◇	90	40◇
Pin Plating	0,25µm Au	5,08µm Sn/Pb	5,08µm Sn

Fig. 3	**Series 310...001**	**Straight Socket**
	310-XX-1_ _-41-001000	
	Specify # of pins →	01-64
Fig. 4	**Series 301...056**	**Socket w/ Retention Pegs**
	301-XX-1_ _-41-560000	
	Specify # of pins →	01-64
Fig. 5	**Series 399...003**	**Right Angle Socket**
	399-XX-1_ _-10-003000	
	Specify # of pins →	01-64

For Electrical, Mechanical & Enviromental Data, See pg. 4

XX=Plating Code See Below

For RoHS compliance select ◇ plating code.

SPECIFY PLATING CODE XX=	13◇	91	93	99	41◇	43◇	44◇
Sleeve (Pin)	0,25µm Au	5,08µm Sn/Pb	5,08µm Sn/Pb	5,08µm Sn/Pb	5,08µm Sn	5,08µm Sn	5,08µm Sn
Contact (Clip)	0,76µm Au	0,25µm Au	0,76µm Au	5,08µm Sn/Pb	0,25µm Au	0,76µm Au	5,08µm Sn

2,54 Grid (0,46 dia.) Pins, Straight and Right Angle Double Row

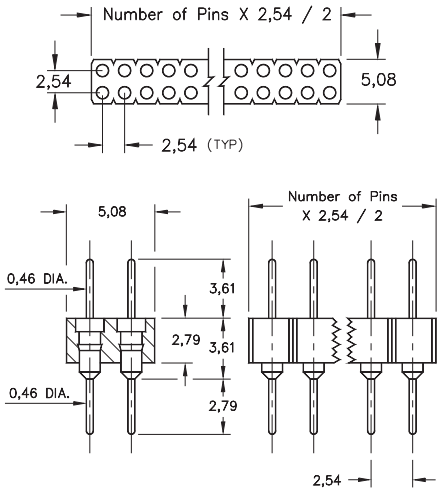

Fig. 1

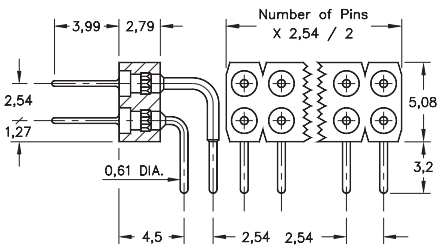

Fig. 2

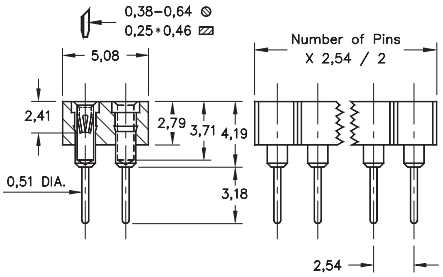

Fig. 3

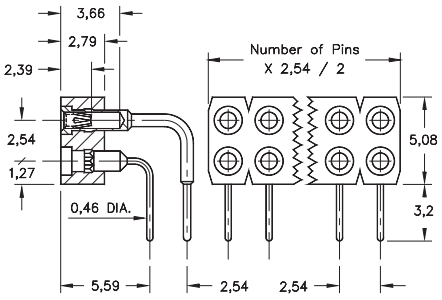

Fig. 4

- Series 4XX are available with straight and right angle solder tails.
- Series 450 & 499...009 use MM #3404 and #5011/5113 pins. See pages 179 & 181 for details.
- Series 410 & 499...003 use MM #1001 and #1103/1602 receptacles. See pages 136, 137 & 138 for details.
- Receptacles use Hi-Rel, 4 finger #30 BeCu contact rated at 3 amps. See page 218 for details.
- Insulators are high temp. thermoplastic.

Ordering Information

Fig. 1 — **Series 450...006 Straight Pin Header**

450-XX-2_ _-00-006000

Specify # of pins → 02-64

Fig. 2 — **Series 499...009 Right Angle Pin Header**

499-10-2 _ _-10-009000

Specify # of pins → 02-64

For Electrical, Mechanical & Enviromental Data, See pg. 4

XX=Plating Code See Below

For RoHS compliance select ◇ plating code.

SPECIFY PLATING CODE XX=	10◇	90	40◇	
Pin Plating	0,25µm Au	5,08µm Sn/Pb	5,08µm Sn	

Fig. 3 — **Series 410...001 Straight Socket**

410-XX-2_ _-41-001000

Specify # of pins → 02-64

Fig. 4 — **Series 499...003 Right Angle Socket**

499-XX-2 _ _-10-003000

Specify # of pins → 02-64

For Electrical, Mechanical & Enviromental Data, See pg. 4

XX=Plating Code See Below

For RoHS compliance select ◇ plating code.

SPECIFY PLATING CODE XX=	13◇					43◇	
Sleeve (Pin)	0,25µm Au					5,08µm Sn	
Contact (Clip)	0,76µm Au					0,76µm Au	

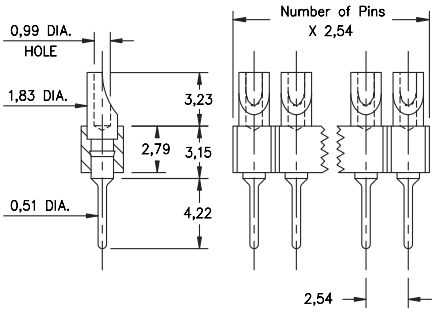

Fig. 1

- Series 380 & 480 use MM #8000 pins. See page 183 for details.
- Series 329 & 429 use MM #2954 pin receptacles and accept pin diameters from 0,38 - 0,64. See page 142 for details.
- Series 329 & 429 receptacles use Hi-Rel, 4 finger BeCu #30 contacts rated at 3 amps. See page 218 for details.
- Solder cups are pre-aligned.
- Insulators are high temp. thermoplastic.

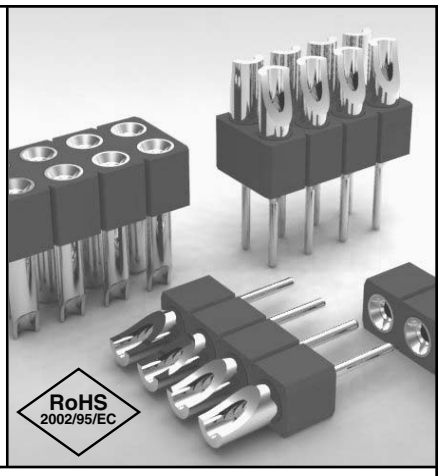

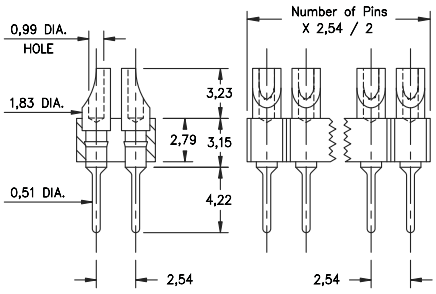

Fig. 2

Ordering Information

Fig. 1	**Series 380...001**	**Solder Cup / Solder Tail**
	380-XX-1_ _-00-001000	
	Specify # of pins →	01-64
Fig. 2	**Series 480...001**	**Solder Cup / Solder Tail**
	480-10-2 _ _-00-001000	
	Specify # of pins →	02-64

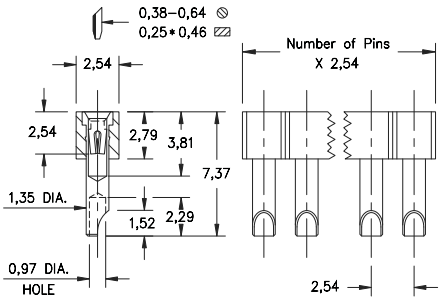

Fig. 3

For Electrical, Mechanical & Enviromental Data, See pg. 4

XX=Plating Code See Below

For RoHS compliance select ◇ plating code.

SPECIFY PLATING CODE XX=	10◇	90◇	40◇	
Pin Plating	0,25µm Au	5,08µm Sn/Pb	5,08µm Sn	

Fig. 3	**Series 329...540**	**Solder Cup Sockets**
	329-43-1 _ _-41-540000	
	Specify # of pins →	01-64
Fig. 4	**Series 429...540**	**Solder Cup Sockets**
	429-43-2 _ _-41-540000	
	Specify # of pins →	02-64

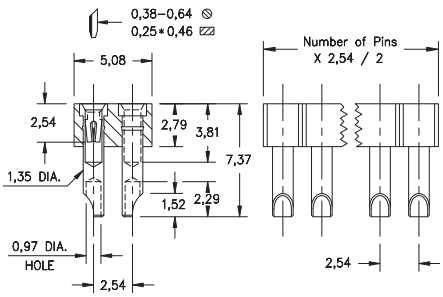

Fig. 4

For Electrical, Mechanical & Enviromental Data, See pg. 4

For RoHS compliance select ◇ plating code.

PLATING CODE =					43◇		
Sleeve (Pin)					5,08µm Sn		
Contact (Clip)					0,76µm Au		

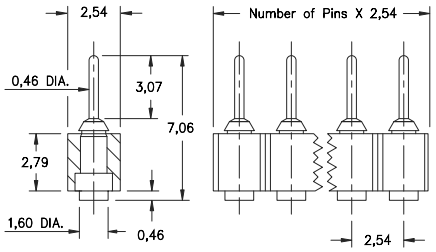

Coplanarity 0,13. For Pin Counts >10 positions consult Technical Support.

Fig. 1

- Series 329 and 429 pin interconnects offer vertical Surface Mount MM #2956-X solder tails. See page 185 for details.
- Series 340 Surface mount sockets use MM #4078 pins. Series 414 sockets use MM #1434 pins. See pages 133 and 138 for details.
- Series 340 and 414 receptacles use Hi-Rel, 4-finger BeCu #30 contacts rated at 3 amps. Receptacles accept 0,38 - 0,64 diameter pins. See page 218 for details.
- Insulators are high temp. thermoplastic.

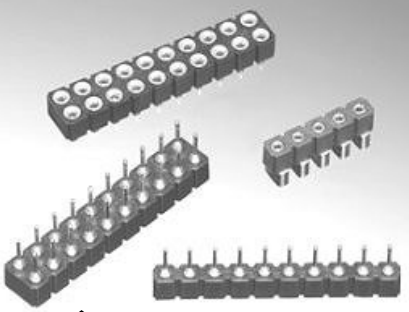

RoHS 2002/95/EC

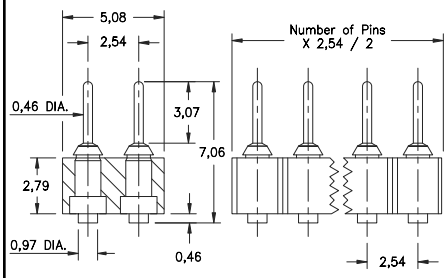

Coplanarity 0,13. For Pin Counts >10 positions consult Technical Support.

Fig. 2

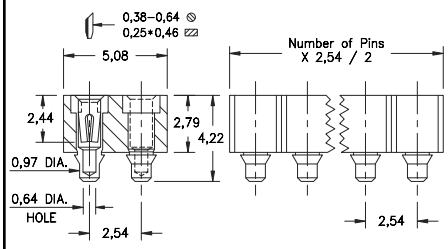

Coplanarity 0,13. For Pin Counts >10 positions consult Technical Support.

Fig. 3

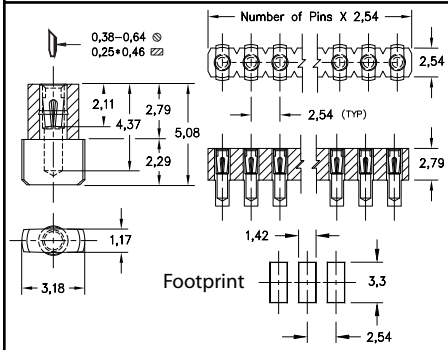

Coplanarity 0,13. For Pin Counts >10 positions consult Technical Support.

Fig. 4

Ordering Information

Fig. 1 — **Series 329...560 Surface Mount Pin Header**

329-10-1_ _-00-560000

Specify # of pins → 02-64

Fig. 2 — **Series 429...560 Surface Mount Pin Header**

429-10-2 _ _-00-560000

Specify # of pins → 04-72

For Electrical, Mechanical & Enviromental Data, See pg. 4

For RoHS compliance select ◇ plating code.

PLATING CODE =	10◇			
Pin Plating	0,25µm Au			

Fig. 3 — **Series 414...117 Surface Mount Socket**

414-43-2 _ _-41-117000

Specify # of pins → 04-72

Fig. 4 — **Series 340...780 Surface Mount Socket**

340-43-1 _ _-30-780100

Specify # of pins → 02-64

For Electrical, Mechanical & Enviromental Data, See pg. 4

For RoHS compliance select ◇ plating code.

PLATING CODE =						43◇	
Sleeve (Pin)						5,08µm Sn	
Contact (Clip)						0,76µm Au	

Mates w/ Series 310...023 Surface Mount Z-Bend Socket (See Fig. 3)

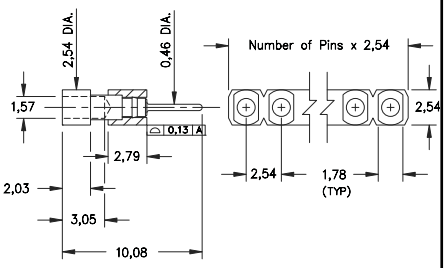

Coplanarity 0,13. For Pin Counts >10 positions consult Technical Support.

Fig. 1

- Series 351 and 800 horizontal Surface Mount headers are availble with 0,46 dia. pluggable pins (MM #5102) and 0,71 dia. pluggable pins (MM #1502). See page 185 for details.
- Series 310 horizontal Surface Mount Z-Bend sockets use MM #1023 receptacles that accept pin diameters from 0,38 - 0,64. Series 801 use MM #1303 receptacles that accept pin diameters from 0,64 - 0,94 and 0,64 square leads. See pages 142 and 150 for details.
- Insulators are high temp. thermoplastic.

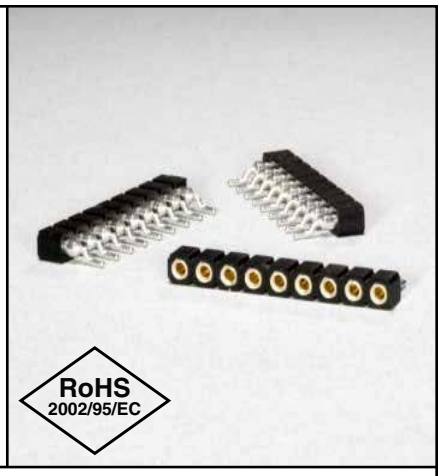

Mates w/ Series 801...002 Surface Mount Z-Bend Socket (See Fig. 4)

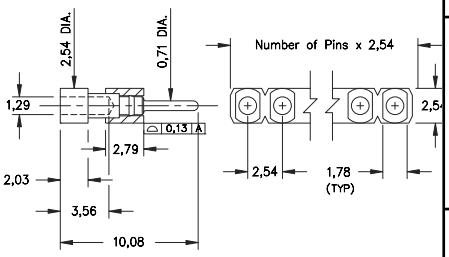

Coplanarity 0,13. For Pin Counts >10 positions consult Technical Support.

Fig. 2

Mates w/ Series 351...002 Surface Mount Header (See Fig. 1)

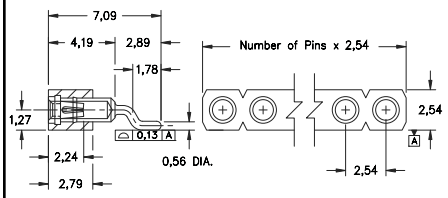

Coplanarity 0,13. For Pin Counts >10 positions consult Technical Support.

Fig. 3

Mates w/ Series 800...002 Surface Mount Header (See Fig. 2)

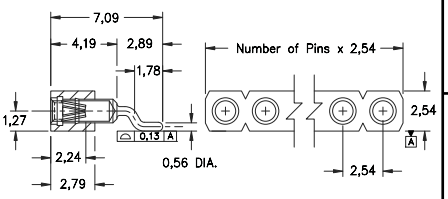

Coplanarity 0,13. For Pin Counts >10 positions consult Technical Support.

Fig. 4

Ordering Information

Fig. 1 — **Series 351...002 0,46 Dia. Surface Mount Header**

351-10-1_ _-40-002000

Specify # of pins → 02-10

Fig. 2 — **Series 800...002 0,71 Dia. Surface Mount Header**

800-10-0 _ _-40-002000

Specify # of pins → 02-10

For Electrical, Mechanical & Enviromental Data, See pg. 4

For RoHS compliance select ◇ plating code.

PLATING CODE =	10◇			
Pin Plating	0,25µm Au			

Fig. 3 — **Series 310...023 0,46 Dia. SMT Z-Bend Socket**

310-43-1 _ _-40-023000

Specify # of pins → 02-10

Fig. 4 — **Series 801...002 0,71 Dia. SMT Z-Bend Socket**

801-XX-0 _ _-40-002000

Specify # of pins → 02-10

For Electrical, Mechanical & Enviromental Data, See pg. 4

XX=Plating Code See Below

For RoHS compliance select ◇ plating code.

SPECIFY PLATING CODE XX=			93	99		43◇	44◇
Sleeve (Pin)			5,08µm Sn/Pb	5,08µm Sn/Pb		5,08µm Sn	5,08µm Sn
Contact (Clip)			0,76µm Au	5,08µm Sn/Pb		0,76µm Au	5,08µm Sn

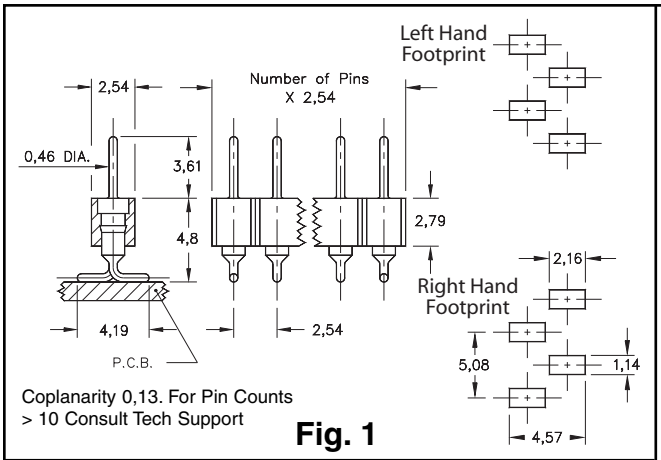

Coplanarity 0,13. For Pin Counts > 10 Consult Tech Support

Fig. 1

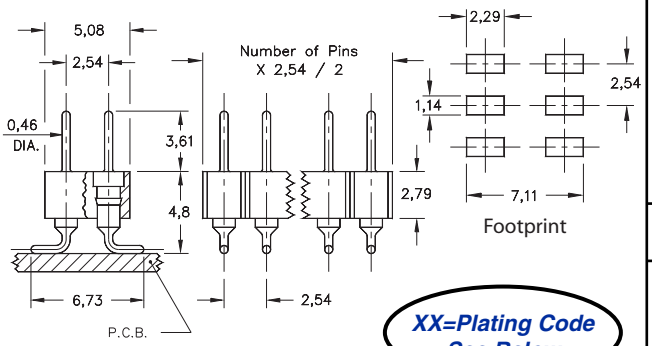

XX=Plating Code See Below

Coplanarity 0,13. For Pin Counts > 20 Consult Tech Support

Fig. 2

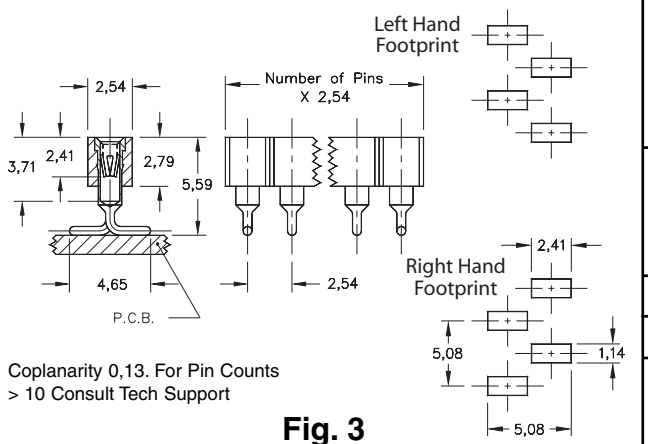

Coplanarity 0,13. For Pin Counts > 10 Consult Tech Support

Fig. 3

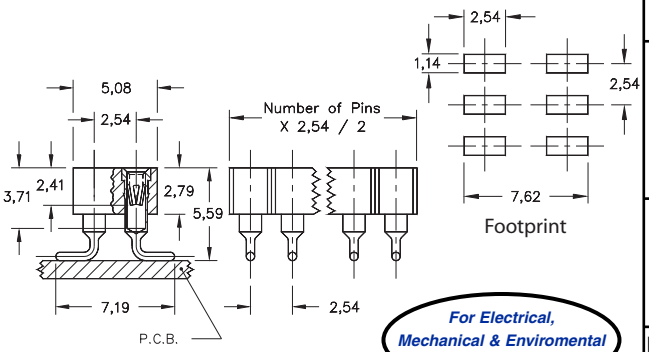

For Electrical, Mechanical & Enviromental Data, See pg. 4

Coplanarity 0,13. For Pin Counts > 20 Consult Tech Support

Fig. 4

- Headers (350 & 450) use MM# 3404 pins. See page 179 for details.
- Sockets (310 & 410) use MM# 1005 receptacles and accept pin diameters from 0,38-0,64. See page 137 for details.
- Coplanarity 0,13 (Single Row max 10 pins; Double Row max 20 pins). For higher pin counts contact technical support.
- Insulators are high temp. thermoplastic.

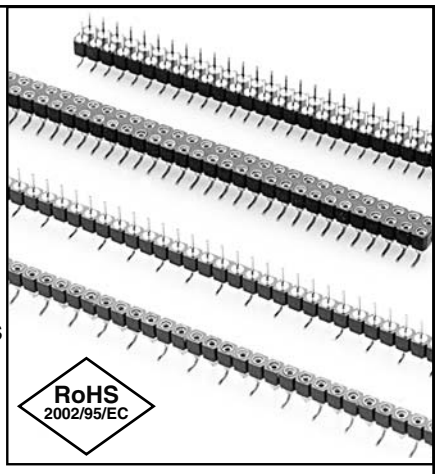

For RoHS compliance select ◇ plating code.

Ordering Information

Fig. 1L	**Single Row Header, Left Hand Footprint Odd or Even # of pins**			
	350-XX-1_ _-00-106000			
	Specify # of pins → 02-64			
Fig. 1R	**Single Row Header, Right Hand Footprint Even # of pins**			
	350-XX-1_ _-00-107000			
	Specify even # of pins → 02-64			
Fig. 2	**Double Row Header, Even # of pins**			
	450-XX-2 _ _-00-106000			
	Specify even # of pins → 04-72			
SPECIFY PLATING CODE XX=		10◇	90	40◇
Pin Plating		0,25µm Au	5,08µm Sn/Pb	5,08µm Sn
Fig. 3L	**Single Row Socket, Left Hand Footprint Odd or Even # of pins**			
	310-43-1_ _-41-105000			
	Specify # of pins → 02-64			
Fig. 3R	**Single Row Socket, Right Hand Footprint Even # of pins**			
	310-43-1_ _-41-107000			
	Specify even # of pins → 02-64			
Fig. 4	**Double Row Socket, Even # of pins**			
	410-43-2 _ _-41-105000			
	Specify even # of pins → 04-72			

PLATING CODE =				43◇	
Sleeve (Pin)				5,08µm Sn	
Contact (Clip)				0,76µm Au	

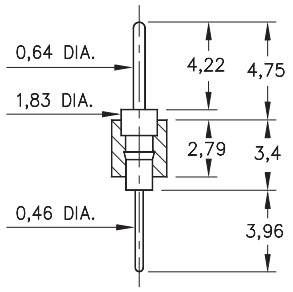

Fig. 1

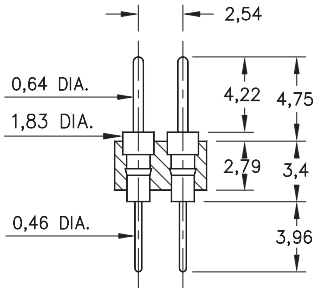

Fig. 2

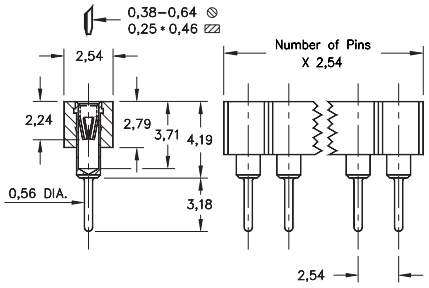

Fig. 3

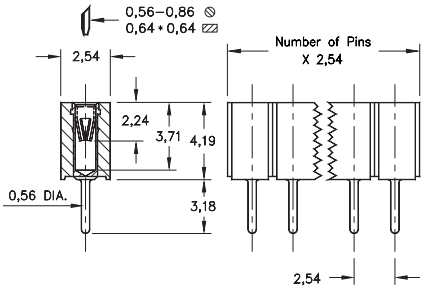

Fig. 4

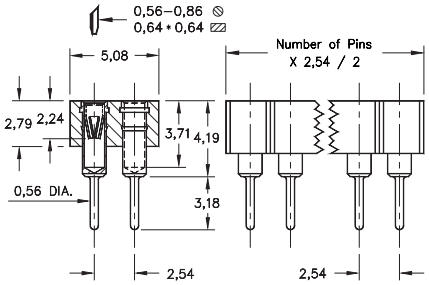

Fig. 5

- Series 350 & 450 single and double row headers use MM #0290 pins. See page 182 for details.
- Series 801 & 803 single and double row low profile sockets use MM #1303 pins. See page 150 for details.
- Series 801 and 803 receptacles use Hi-Rel, 6-finger BeCu #16 contacts rated at 4.5 amps. Receptacles accept 0,64 diameter and 0,64 square pins. See page 221 for details.
- Insulators are high temp. thermoplastic.

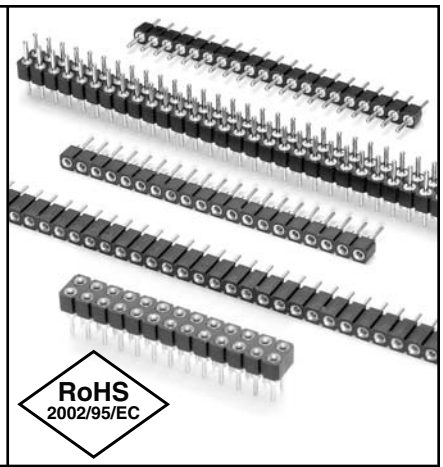

Ordering Information

Fig. 1 — **Single Row** — **0,64 Pin / 0,46 Solder Tail**

350-XX-1_ _-00-001000

Specify # of pins → 01-64

Fig. 2 — **Double Row** — **0,64 Pin / 0,46 Solder Tail**

450-XX-2 _ _-00-001000

Specify # of pins → 02-64

For Electrical, Mechanical & Enviromental Data, See pg. 4

XX=Plating Code See Below

For RoHS compliance select ◇ plating code.

SPECIFY PLATING CODE XX=	10◇	90	40◇	
Pin Plating	0,25µm Au	5,08µm Sn/Pb	5,08µm Sn	

Fig. 3 — **Single Row** — **Low Profile Socket** (short insulator)

801-43-0 _ _-10-003000

Specify # of pins → 01-64

Fig. 4 — **Single Row** — **Low Profile Socket** (long insulator)

801-43-0 _ _-10-013000

Specify # of pins → 01-36

Fig. 5 — **Double Row** — **Low Profile Socket**

803-43-0 _ _-10-003000

Specify # of pins → 02-72

For Electrical, Mechanical & Enviromental Data, See pg. 4

For RoHS compliance select ◇ plating code.

PLATING CODE =						43◇	
Sleeve (Pin)						5,08µm Sn	
Contact (Clip)						0,76µm Au	

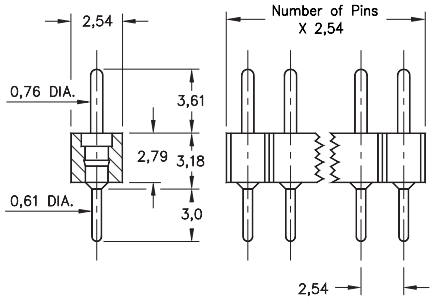

Fig. 1

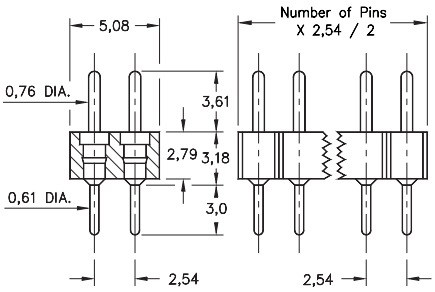

Fig. 2

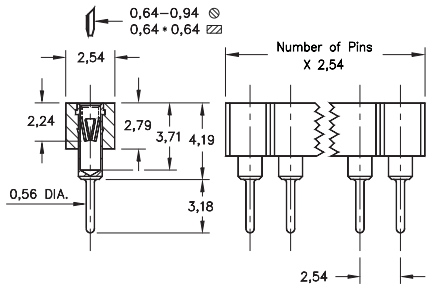

Fig. 3

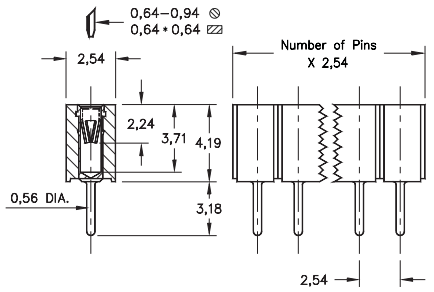

Fig. 4

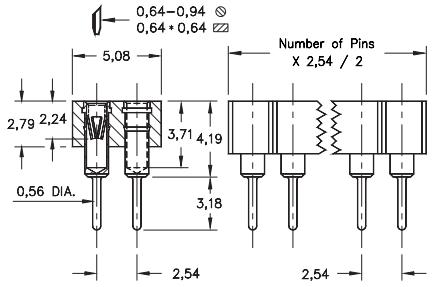

Fig. 5

- Series 800 and 802 single and double row pin headers use MM #5016 pins. See page 182 for details.
- Series 801 and 803 single and double row sockets use MM #1303 pins. See page 150 for details.
- Series 801 and 803 receptacles use Hi-Rel, 6-finger BeCu #47 contacts rated at 4.5 amps. Receptacles accept 0,64 diameter and 0,64 square pins. See page 221 for details.
- Insulators are high temp. thermoplastic.

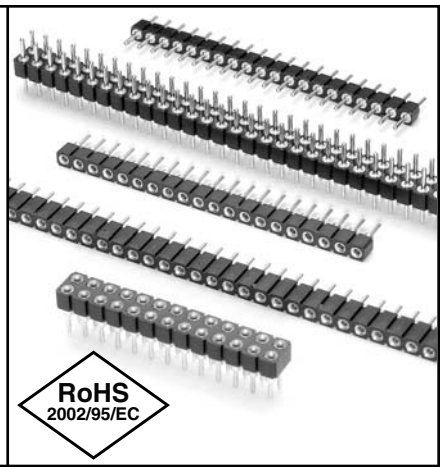

Ordering Information

Fig. 1 — **Single Row** **Low Profile Pin Header**

800-XX-0_ _-10-002000

Specify # of pins → 01-64

Fig. 2 — **Double Row** **Low Profile Pin Header**

802-XX-0 _ _-10-002000

Specify # of pins → 02-64

For Electrical, Mechanical & Enviromental Data, See pg. 4

XX=Plating Code See Below

For RoHS compliance select ◇ plating code.

SPECIFY PLATING CODE XX=	10◇	90	40◇
Pin Plating	0,25µm Au	5,08µm Sn/Pb	5,08µm Sn

Fig. 3 — **Single Row** **Low Profile Socket** (short insulator)

801-XX-0 _ _-10-002000

Specify # of pins → 01-64

Fig. 4 — **Single Row** **Low Profile Socket** (long insulator)

801-XX-0 _ _-10-012000

Specify # of pins → 01-36

Fig. 5 — **Double Row** **Low Profile Socket**

803-XX-0 _ _-10-002000

Specify # of pins → 02-72

For Electrical, Mechanical & Enviromental Data, See pg. 4

XX=Plating Code See Below

For RoHS compliance select ◇ plating code.

SPECIFY PLATING CODE XX=			93	99		43◇	
Sleeve (Pin)			5,08µm Sn/Pb	5,08µm Sn/Pb		5,08µm Sn	
Contact (Clip)			0,76µm Au	5,08µm Sn/Pb		0,76µm Au	

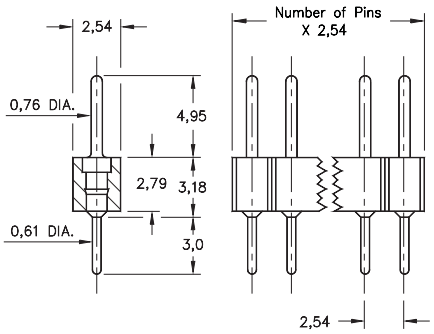

Fig. 1

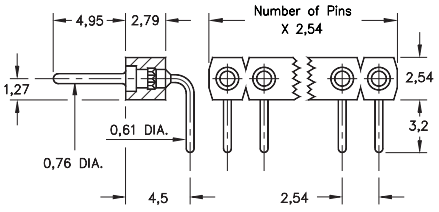

Fig. 2

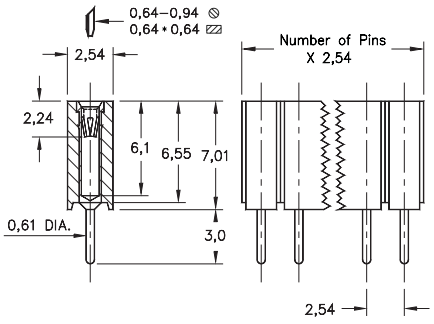

Fig. 3

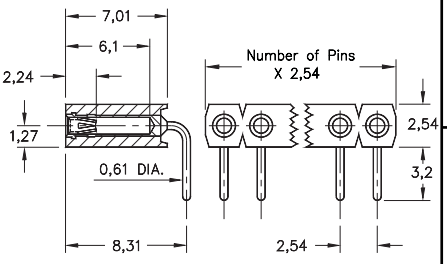

Fig. 4

- Pin interconnects available with straight MM #7007 or right angle MM #5005 solder tails. See page 182 for details.
- Sockets are available with straight MM #1304 or right angle MM #1305 solder tails. See pages 148 & 149 for details.
- MM #1304 and MM #1305 receptacles use Hi-Rel, 6-finger BeCu #47 contacts rated at 4.5 amps. Receptacles accept 0,76 diameter and 0,64 square pins. See page 221 for details.
- Insulators are high temp. thermoplastic.

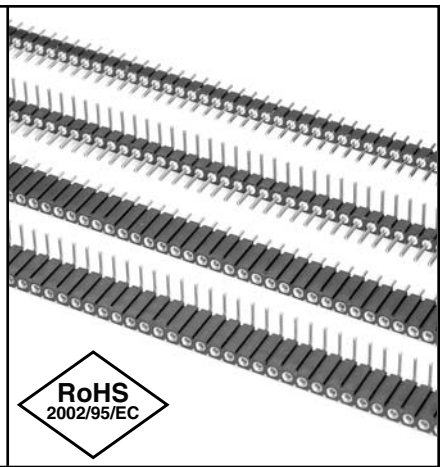

Ordering Information

Fig. 1 — **Series 800...10-001 Straight Pin Header**

800-XX-0_ _-10-001000

Specify # of pins → 01-64

Fig. 2 — **Series 800...20-001 Right Angle Pin Header**

800-XX-0 _ _-20-001000

Specify # of pins → 02-64

For Electrical, Mechanical & Enviromental Data, See pg. 4

XX=Plating Code See Below

For RoHS compliance select ◇ plating code.

SPECIFY PLATING CODE XX=	10◇	90	40◇	
Pin Plating	0,25µm Au	5,08µm Sn/Pb	5,08µm Sn	

Fig. 3 — **Series 801...10-001 Straight Socket**

★ 44 Plating Non-Standard — 801-XX-0 _ _-10-001000

Specify # of pins → 01-50

Fig. 4 — **Series 801...20-001 Right Angle Socket**

★ 44 Plating Non-Standard — 801-XX-0 _ _-20-001000

Specify # of pins → 01-50

For Electrical, Mechanical & Enviromental Data, See pg. 4

XX=Plating Code See Below

For RoHS compliance select ◇ plating code.

SPECIFY PLATING CODE XX=			93	99		43◇	44◇
Sleeve (Pin)			5,08µm Sn/Pb	5,08µm Sn/Pb		5,08µm Sn	5,08µm Sn
Contact (Clip)			0,76µm Au	5,08µm Sn/Pb		0,76µm Au	5,08µm Sn

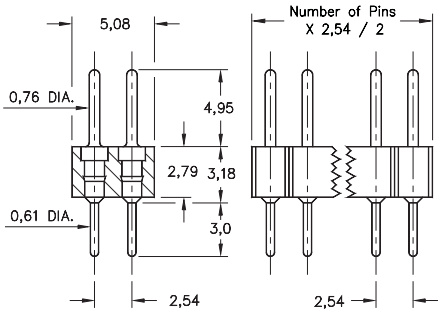

Fig. 1

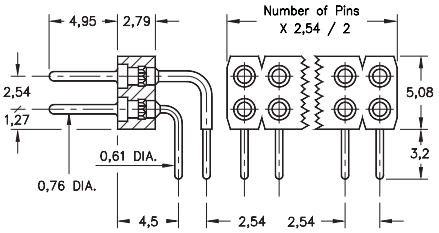

Fig. 3

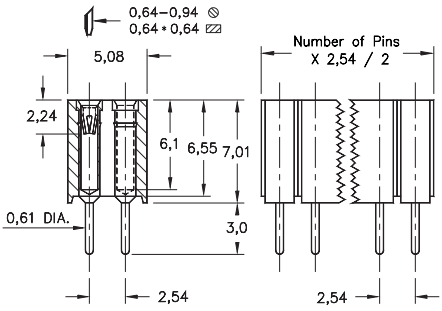

Fig. 3

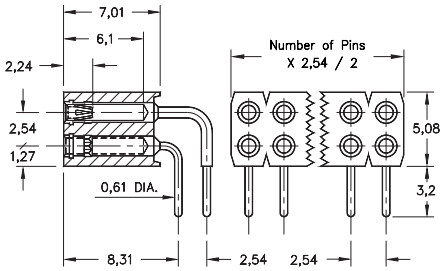

Fig. 4

- Pin interconnects available with straight MM #7007 or right angle MM #5005/5107 solder tails. See page 182 for details.
- Sockets are available with straight MM #1304 or right angle MM #1305/1306 solder tails. See pages 148 & 149 for details.
- MM #1304, #1305 & #1306 receptacles use use Hi-Rel, 6-finger BeCu #47 contacts rated at 4.5 amps. Receptacles accept 0,76 diameter and 0,64 square pins. See page 221 for details.
- Insulators are high temp. thermoplastic.

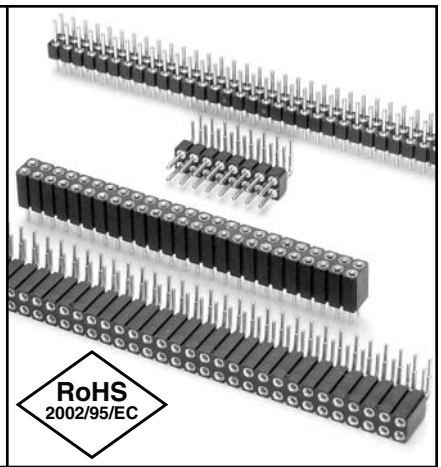

Ordering Information

Fig. 1 — **Series 802...10-001 Straight Pin Header**

802-XX-0_ _-10-001000

Specify # of pins → 02-64

Fig. 2 — **Series 802...20-001 Right Angle Pin Header**

802-XX-0 _ _-20-001000

Specify # of pins → 02-64

For Electrical, Mechanical & Enviromental Data, See pg. 4

XX=Plating Code See Below

For RoHS compliance select ◇ plating code.

SPECIFY PLATING CODE XX=	10◇	90	40◇
Pin Plating	0,25µm Au	5,08µm Sn/Pb	5,08µm Sn

Fig. 3 — **Series 803...10-001 Straight Socket**

803-XX-_ _ _-10-001000

Specify # of pins → 002-100

Fig. 4 — **Series 803...20-001 Right Angle Socket**

803-XX-_ _ _-20-001000

Specify # of pins → 002-100

For Electrical, Mechanical & Enviromental Data, See pg. 4

XX=Plating Code See Below

For RoHS compliance select ◇ plating code.

SPECIFY PLATING CODE XX=			93	99		43◇	
Sleeve (Pin)			5,08µm Sn/Pb	5,08µm Sn/Pb		5,08µm Sn	
Contact (Clip)			0,76µm Au	5,08µm Sn/Pb		0,76µm Au	

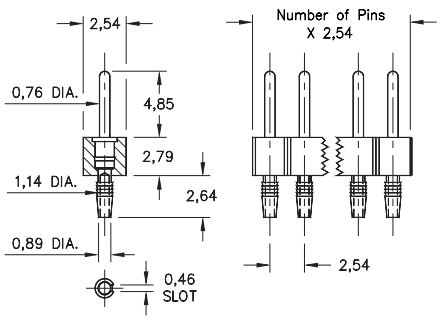

Fig. 1

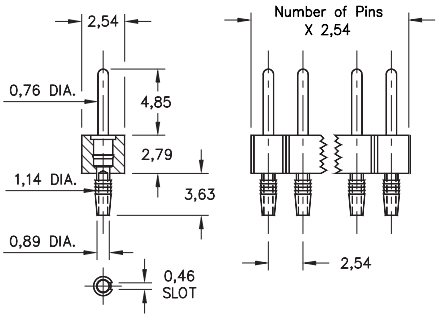

Fig. 2

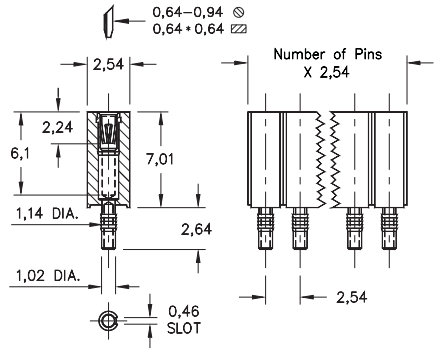

Fig. 3

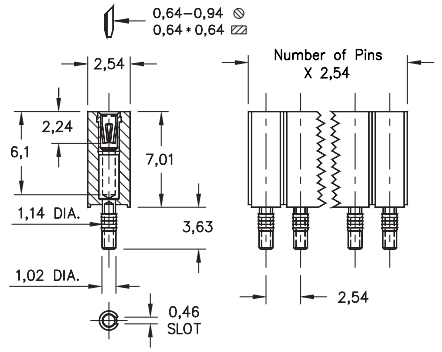

Fig. 4

- The unique compliant tail pins conform to 1,02±0,08 finished hole without stressing inner layers. Patent No. 4,799,904
- Series 800 pin headers are offered in two tail lengths for 1,52 - 2,54 (MM #5601) and 2,29 - 3,3 (MM #5602) thick panels. See page 187 for details.
- Series 801 sockets MM #4614 or #4615 use Hi-Rel, 6-finger BeCu #47 contacts rated at 4.5 amps. Receptacles accept 0,76 diameter pins & 0,64 square pins. See page 221 for details.
- Insulators are high temp. thermoplastic.

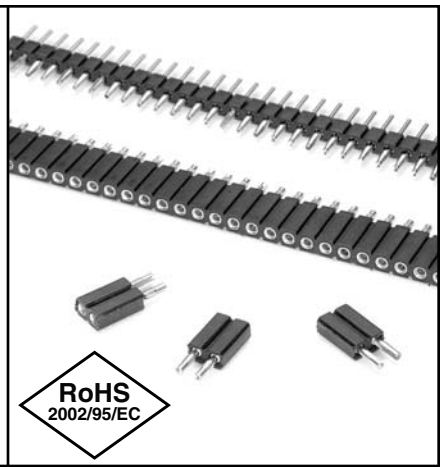

Ordering Information

Fig. 1 — **Compliant Tail Pin Header for 1,52 - 2,54 thick boards**

800-XX-0 _ _-61-001000

Specify # of pins → 01-64

Fig. 2 — **Compliant Tail Pin Header for 2,29 - 3,3 thick boards**

800-XX-0 _ _-62-001000

Specify # of pins → 01-64

For Electrical, Mechanical & Enviromental Data, See pg. 4

XX=Plating Code See Below

For RoHS compliance select ◇ plating code.

SPECIFY PLATING CODE XX=	10◇	90	40◇
Pin Plating	0,25µm Au	5,08µm Sn/Pb	5,08µm Sn

Fig. 3 — **Compliant Tail Socket for 1,52 - 2,54 thick boards**

801-XX-0 _ _-61-001000

Specify # of pins → 01-50

Fig. 4 — **Compliant Tail Socket for 2,29 - 3,3 thick boards**

801-XX-0 _ _-62-001000

Specify # of pins → 01-50

For Electrical, Mechanical & Enviromental Data, See pg. 4

XX=Plating Code See Below

For RoHS compliance select ◇ plating code.

SPECIFY PLATING CODE XX=			93	99		43◇	
Sleeve (Pin)			5,08µm Sn/Pb	5,08µm Sn/Pb		5,08µm Sn	
Contact (Clip)			0,76µm Au	5,08µm Sn/Pb		0,76µm Au	

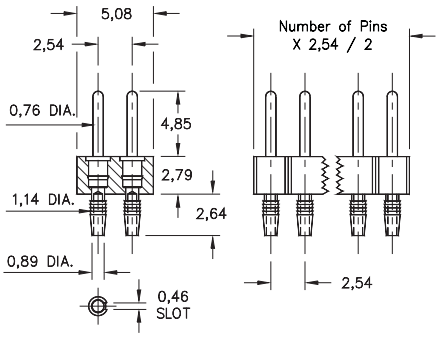

Fig. 1

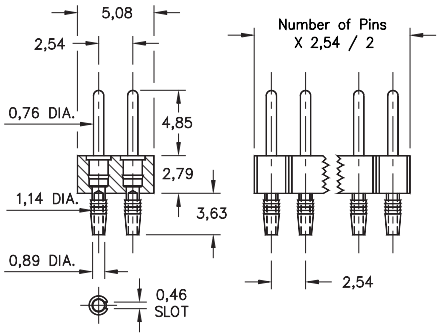

Fig. 2

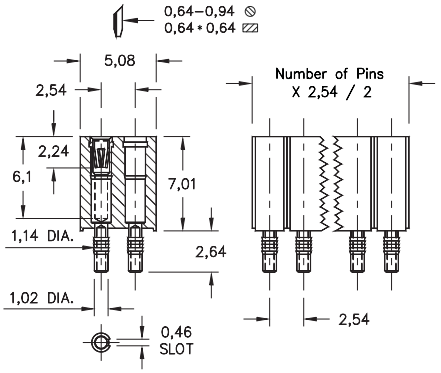

Fig. 3

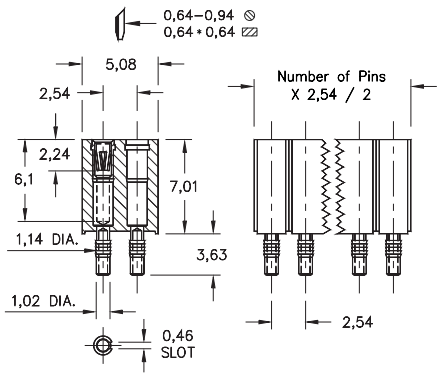

Fig. 4

- The unique compliant tail pins conform to 1,02±0,76 finished hole without stressing inner layers. Patent No. 4,799,904
- Series 802 pin headers are offered in two tail lengths for 1,52 - 2,54 (MM #5601) and 2,29 - 3,3 (MM #5602) thick panels. See page 187 for details.
- Series 803 sockets MM #4614 or #4615 use Hi-Rel, 6-finger BeCu #47 contacts rated at 4.5 amps. Receptacles accept 0,76 diameter pins & 0,64 square pins. See page 221 for details.
- Insulators are high temp. thermoplastic.

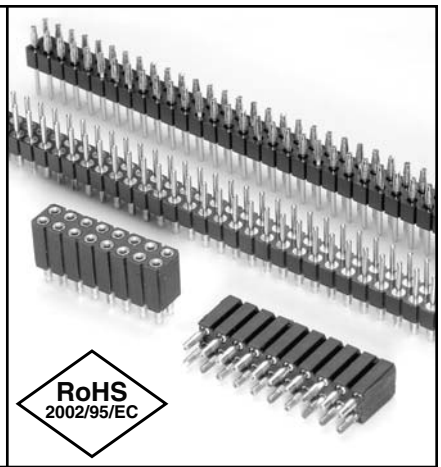

Ordering Information

Fig. 1	**Compliant Tail Pin Header for 1,52 - 2,54 thick boards** 802-XX-0 _ _-61-001000 **Specify # of pins** → 02-64
Fig. 2	**Compliant Tail Pin Header for 2,29 - 3,3 thick boards** 802-XX-0 _ _-62-001000 **Specify # of pins** → 02-64

For Electrical, Mechanical & Enviromental Data, See pg. 4

XX=Plating Code See Below

For RoHS compliance select ◇ plating code.

SPECIFY PLATING CODE XX=	10◇	90	40◇
Pin Plating	0,25µm Au	5,08µm Sn/Pb	5,08µm Sn

Fig. 3	**Compliant Tail Socket for 1,52 - 2,54 thick boards** 803-XX-_ _ _-61-001000 **Specify # of pins** → 002-100
Fig. 4	**Compliant Tail Socket for 2,29 - 3,3 thick boards** 803-XX-_ _ _-62-001000 **Specify # of pins** → 002-100

For Electrical, Mechanical & Enviromental Data, See pg. 4

XX=Plating Code See Below

For RoHS compliance select ◇ plating code.

SPECIFY PLATING CODE XX=			93	99		43◇	
Sleeve (Pin)			5,08µm Sn/Pb	5,08µm Sn/Pb		5,08µm Sn	
Contact (Clip)			0,76µm Au	5,08µm Sn/Pb		0,76µm Au	

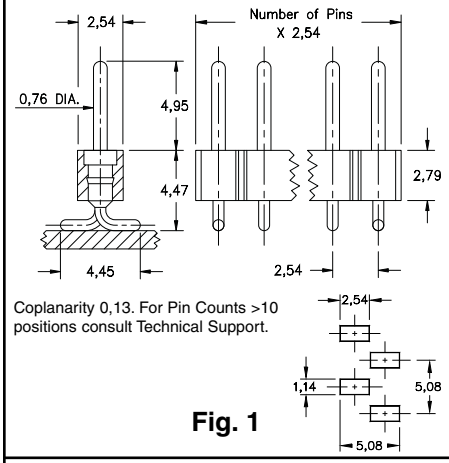

Coplanarity 0,13. For Pin Counts >10 positions consult Technical Support.

Fig. 1

- Series 800 & 802 use MM #7007 pins. See page 182 for details.
- Series 801 & 803 use MM #1304 receptacles and accept pin diameters from 0,64 - 0,94 and 0,64 square pins. See page 148 for details.
- Receptacles use Hi-Rel, 6 finger BeCu #47 contact rated at 4.5 amps. See page 221 for details.
- Insulators are high temp. thermoplastic.

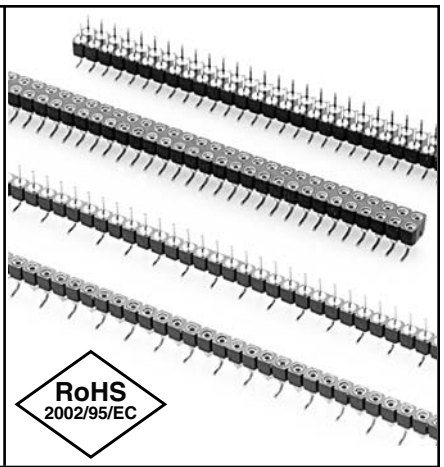

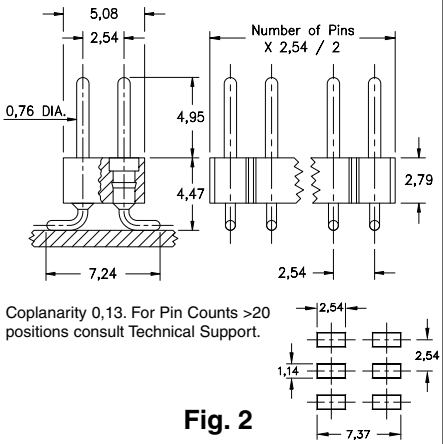

Coplanarity 0,13. For Pin Counts >20 positions consult Technical Support.

Fig. 2

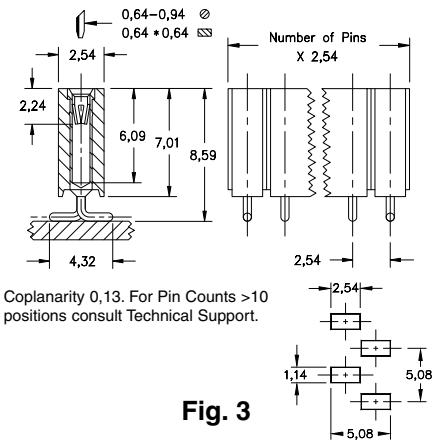

Coplanarity 0,13. For Pin Counts >10 positions consult Technical Support.

Fig. 3

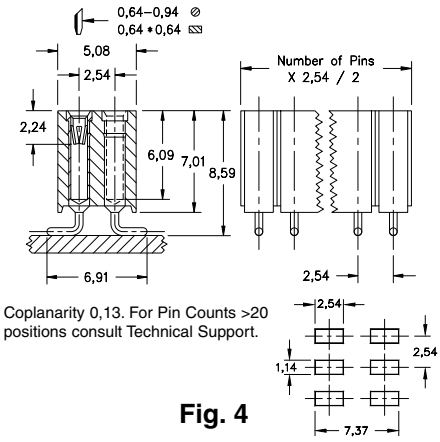

Coplanarity 0,13. For Pin Counts >20 positions consult Technical Support.

Fig. 4

Ordering Information

Fig. 1 — 800...001 Single Row Surface Mount Header

800-10-0_ _-30-001000

Specify # of pins → 03-64

Fig. 2 — 802...001 Double Row Surface Mount Header

802-10-0_ _-30-001000

Specify # of pins → 04-72

For Electrical, Mechanical & Enviromental Data, See pg. 4

For RoHS compliance select ◇ plating code.

PLATING CODE =	10◇			
Pin Plating	0,25µm Au			

Fig. 3 — 801...001 Single Row Surface Mount Socket

801-43-0 _ _-30-001000

Specify # of pins → 03-50

Fig. 4 — 803...001 Double Row Surface Mount Socket

803-XX-_ _ _-30-001000

Specify # of pins → 004-100

For Electrical, Mechanical & Enviromental Data, See pg. 4

XX=Plating Code See Below

For RoHS compliance select ◇ plating code.

SPECIFY PLATING CODE XX=			93			43◇	
Sleeve (Pin)			5,08µm Sn/Pb			5,08µm Sn	
Contact (Clip)			0,76µm Au			0,76µm Au	

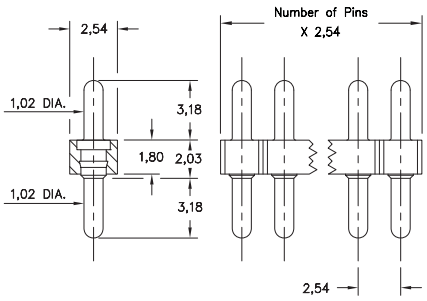

Fig. 1

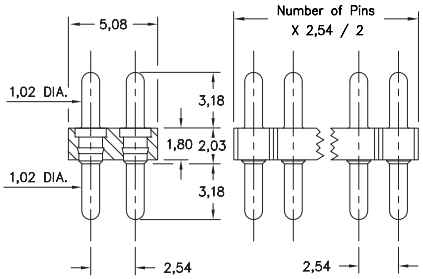

Fig. 2

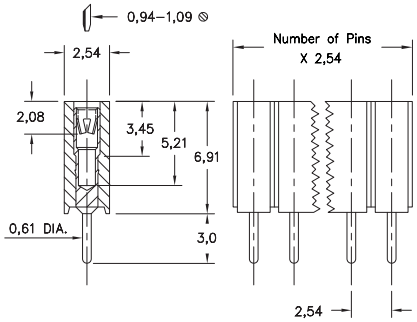

Fig. 3

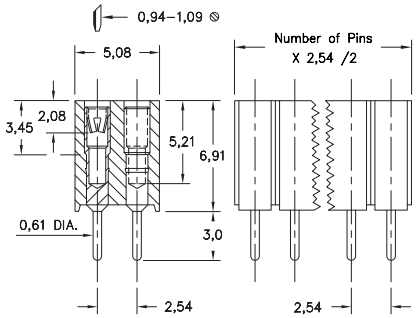

Fig. 4

- Series 800 and 802 single & double row interconnects feature sturdy 1,02 Dia. leads (MM #3077) and low profile (1,80 thick) insulator. See page 182 for details.
- Series 801 and 803 single and double row sockets use MM #1313 receptacles. See page 151 for details.
- Series 801 and 803 receptacles use Hi-Rel, 6-finger BeCu #18 contacts rated at 8 amps. Receptacles accept 0,94 - 1,09 diameter pins. See page 222 for details.
- Insulators are high temp. thermoplastic.

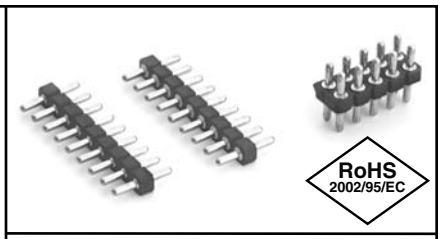

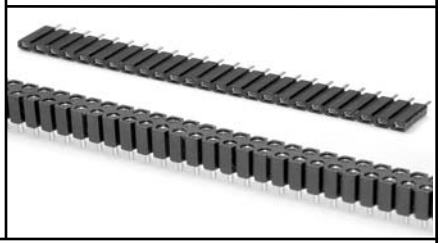

Ordering Information

Fig. 1 — **Series 800...10-004 Single Row Pin Header**

800-XX-0_ _-10-004000

Specify # of pins → 01-50

Fig. 2 — **Series 802...10-004 Double Row Pin Header**

802-XX-_ _ _-10-004000

Specify # of pins → 04-100

For Electrical, Mechanical & Enviromental Data, See pg. 4

XX=Plating Code See Below

For RoHS compliance select ◇ plating code.

SPECIFY PLATING CODE XX=	10◇	90	40◇	
Pin Plating	0,25µm Au	5,08µm Sn/Pb	5,08µm Sn	

Fig. 3 — **Series 801...10-004 Single Row Socket**

801-XX-0_ _-10-004000

Specify # of pins → 01-50

Fig. 4 — **Series 803...10-004 Double Row Socket**

803-XX-_ _ _-10-004000

Specify # of pins → 004-100

For Electrical, Mechanical & Enviromental Data, See pg. 4

XX=Plating Code See Below

For RoHS compliance select ◇ plating code.

SPECIFY PLATING CODE XX=			93	99		43◇	
Sleeve (Pin)			5,08µm Sn/Pb	5,08µm Sn/Pb		5,08µm Sn	
Contact (Clip)			0,76µm Au	5,08µm Sn/Pb		0,76µm Au	

2,54 Grid OFP® Pass Through Sockets for Ø0,76 & □0,64 pins Single and Double Row

- 834/835 Series Pass Through Sockets have a low 3,30 profile and will accept Ø 0,76 round pin, as well as industry standard 0,64 square pin headers.
- They are typically used to interconnect two or more parallel circuit boards.
- Sockets are designed for hand, wave or reflow* soldering. The high temp. insulator is compatible with all solder processes.
- Unique *ORGANIC FIBRE PLUG®* barriers prevent solder, paste or flux from contaminating the internal spring contacts. After soldering, the *OFP®* barriers are pushed out of the socket when the mating header is inserted.
- Mill-Max sockets use a precision-machined brass sleeve with a press-fit beryllium copper "multi-finger" spring contact.
- Recommended mounting holes are Ø 1,17 ±0,08 PTH (1,2 mm drilled prior to plating).

**Intrusive reflow (also called "pin-in-paste") is a technique of using conventional through-hole components in a reflow soldering process. The pass through socket is placed into plated through-holes in the circuit board (solder paste has previously been screen printed on pads adjacent to the holes) and the board is reflowed in the same pass as other SMT components. Solder will fill the plated through-holes and achieve solder joints as reliable as wave soldering. The OFP® barrier prevents solder paste from being picked-up inside the contact during assembly.*

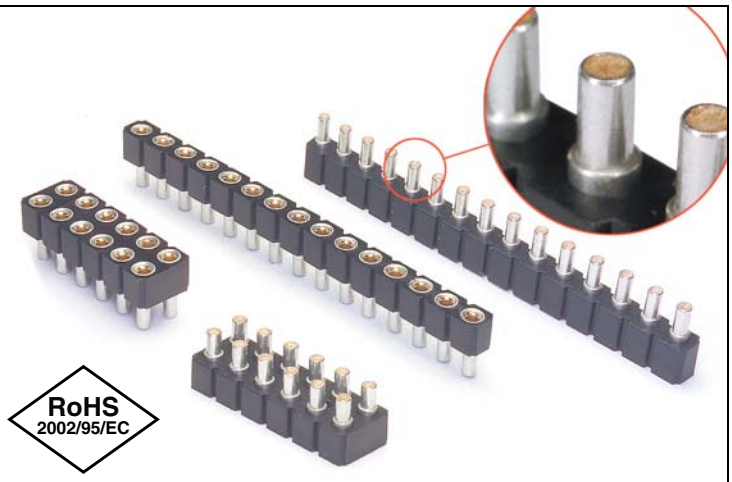

Typical Application

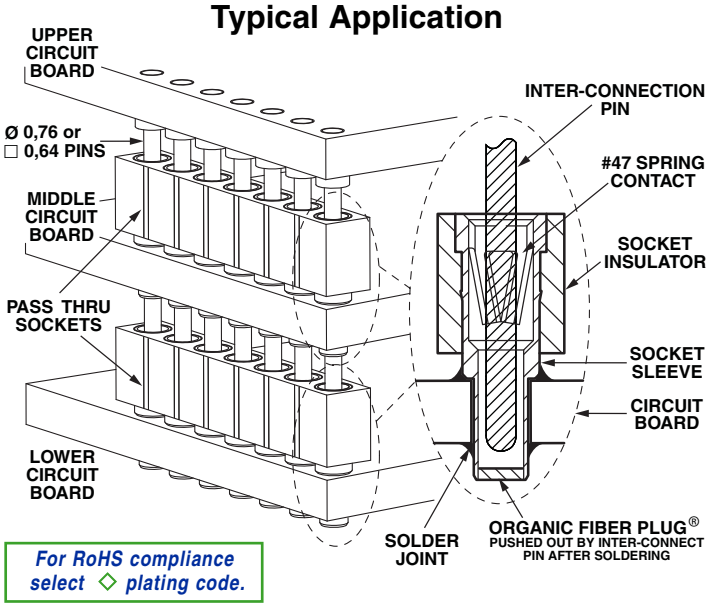

For RoHS compliance select ◇ plating code.

US Patent #7,086,870

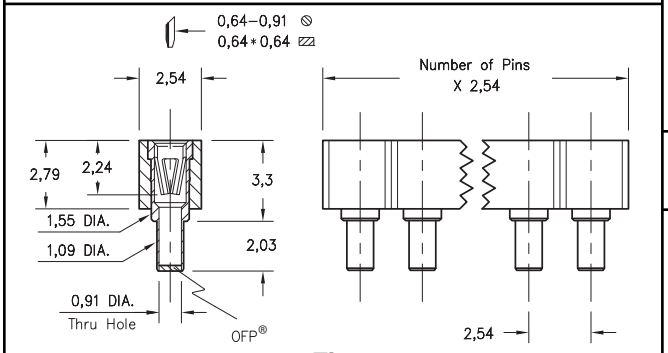

Fig. 1

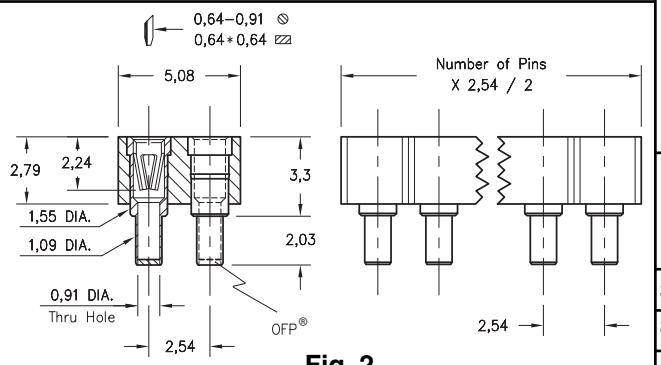

Fig. 2

Ordering Information

Fig. 1	**Single Row OFP® Pass Through Socket** 834-XX-0 _ _-10-001000 **Specify # of pins** → 01-64
Fig. 2	**Double Row OFP® Pass Through Socket** 835-XX-0 _ _-10-001000 **Specify # of pins** → 02-72

For Electrical, Mechanical & Enviromental Data, See pg. 4

XX=Plating Code See Below

SPECIFY PLATING CODE XX=		93		43◇	
Sleeve (Pin)		5,08µm Sn/Pb		5,08µm Sn	
Contact (Clip)		0,76µm Au		0,76µm Au	

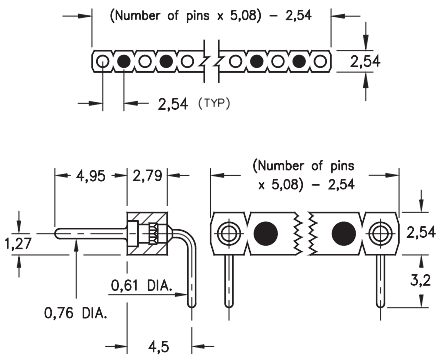

Fig. 1

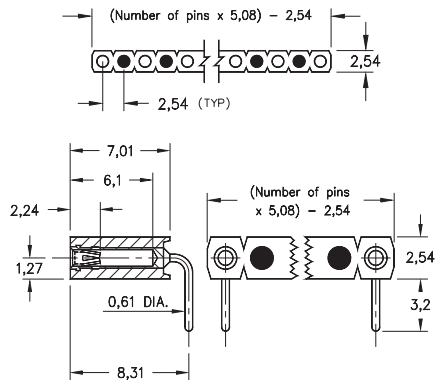

Fig. 2

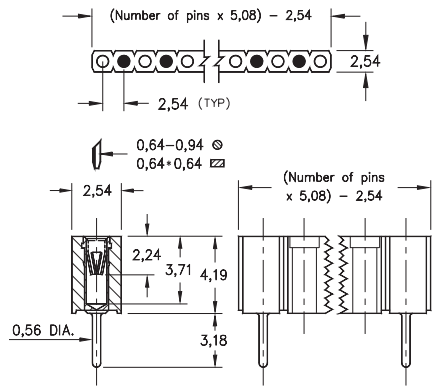

Fig. 3

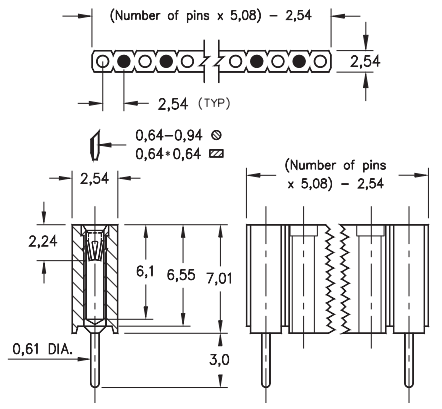

Fig. 4

- Series 800 selectively loaded headers use MM #5005 pins. See page 182 for details.
- Series 801 selectively loaded sockets use MM #1303, #1304 and #1305 pins. See pages 148, 149 & 150 for details.
- Series 801 selectively loaded sockets use Hi-Rel, 6-finger BeCu #47 contacts rated at 3 amps. See page 221 for details.
- Insulators are high temp. thermoplastic, suitable for all soldering operations.

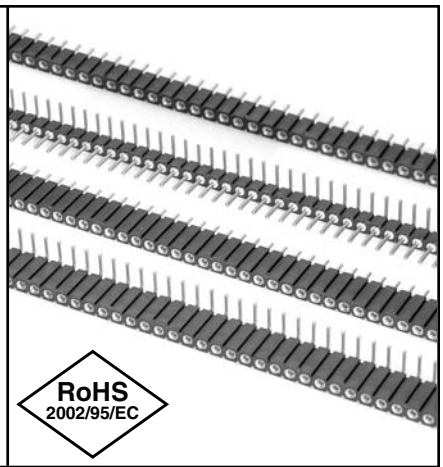

Ordering Information

Fig. 1 — **Series 800...20-201** — **Right Angle Header**

800-10-0_ _-20-201000

Specify # of pins → 02-32

For Electrical, Mechanical & Enviromental Data, See pg. 4

For RoHS compliance select ◇ plating code.

PLATING CODE =	10◇			
Pin Plating	0,25µm Au			

Fig. 2 — **Series 801...20-201** — **Right Angle Socket**

801-43-0_ _-20-201000

Specify # of pins → 02-25

Fig. 3 — **Series 801...20-212** — **Straight Socket**

801-43-0_ _-10-212000

Specify # of pins → 02-18

Fig. 4 — **Series 801...10-201** — **Straight Socket**

801-43-0_ _-10-201000

Specify # of pins → 02-25

For Electrical, Mechanical & Enviromental Data, See pg. 4

For RoHS compliance select ◇ plating code.

PLATING CODE =						43◇	
Sleeve (Pin)						5,08µm Sn	
Contact (Clip)						0,76µm Au	

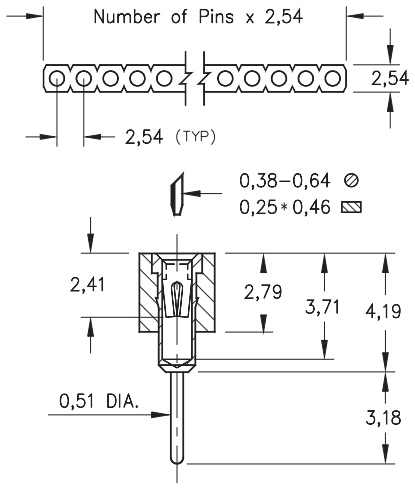

Fig. 1

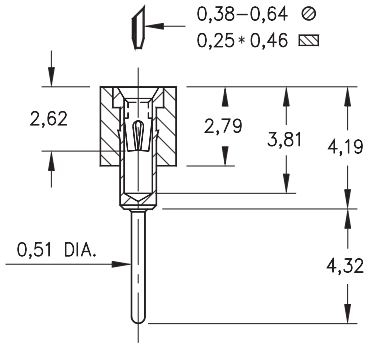

Fig. 2

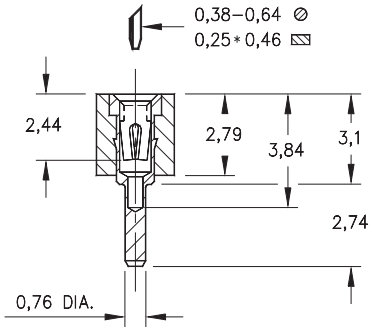

Fig. 3

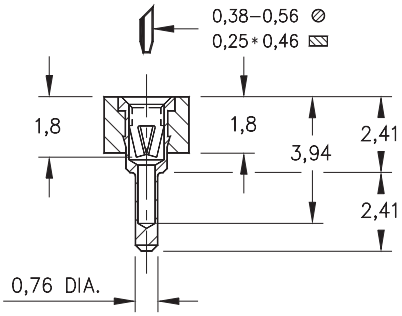

Fig. 4

- SIP sockets accept 0,38 - 0,64 diameter pins and standard IC leads.
- Various solder tails available: standard length, long for multi-layer boards, very low and ultra low profile. See Mill-Max #1001, 0134, 0501 or 1534 pins (See pages 132, 133, 136) for details.
- Hi-Rel, 4-finger BeCu #12 & #30 contacts are rated at 3 amps. See pages 218 for details.
- Insulators are high temp. thermoplastic.

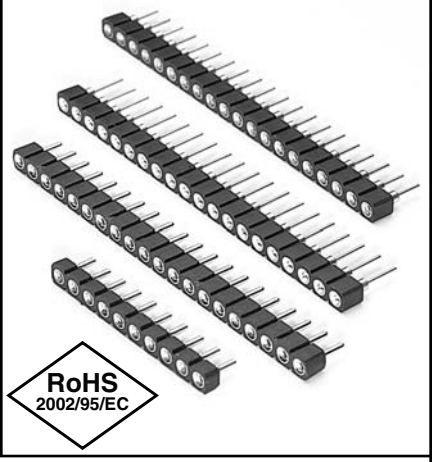

Ordering Information

Fig. 1	**Series 310...001**	**Standard Solder Tail**
	310-XX-1_ _-41-001000	
	Specify # of pins → 01-64	
Fig. 2	**Series 311...001**	**Long Solder Tail**
	★ 41 & 91 Platings Non-Standard 311-XX-1_ _-41-001000	
	Specify # of pins → 01-64	
Fig. 3	**Series 315...001**	**Very Low Profile**
	★ 41 & 91 Platings Non-Standard 315-XX-1_ _-41-001000	
	Specify # of pins → 01-64	
Fig. 4	**Series 315...003**	**Ultra Low Profile**
	★ 41 & 91 Platings Non-Standard 315-XX-1_ _-41-003000	
	Specify # of pins → 01-64	

For Electrical, Mechanical & Enviromental Data, See pg. 4

XX=Plating Code See Below

For RoHS compliance select ◇ plating code.

SPECIFY PLATING CODE XX=	13◇	91	93	99	41◇	43◇	44◇
Sleeve (Pin)	0,25µm Au	5,08µm Sn/Pb	5,08µm Sn/Pb	5,08µm Sn/Pb	5,08µm Sn	5,08µm Sn	5,08µm Sn
Contact (Clip)	0,76µm Au	0,25µm Au	0,76µm Au	5,08µm Sn/Pb	0,25µm Au	0,76µm Au	5,08µm Sn

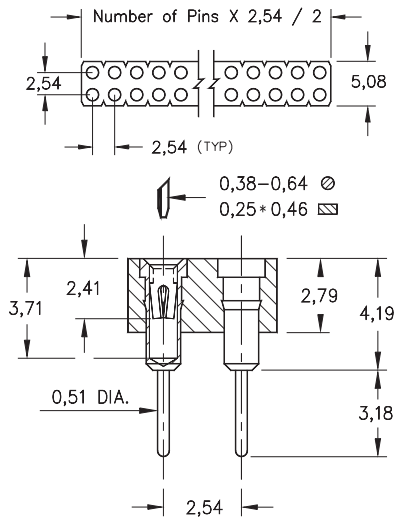

Fig. 1

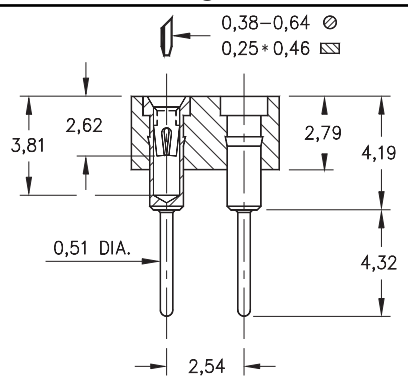

Fig. 2

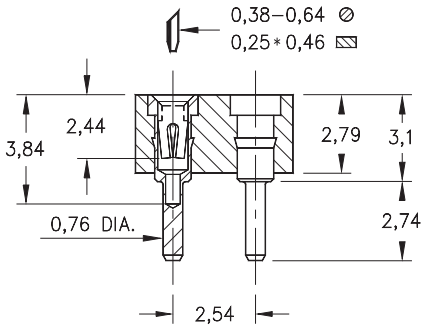

Fig. 3

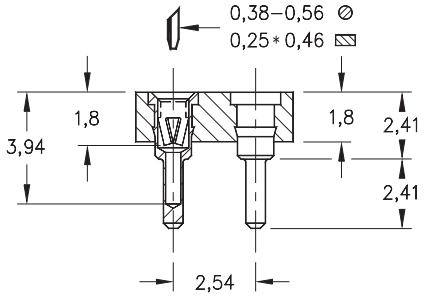

Fig. 4

- Series 41X double row strip sockets are on 2,54 grid.
- Various solder tails available: standard length, long for multi-layer boards, very low and ultra low profile. Using Mill-Max #1001, 0134, 0501 or 1534 pins (See pages 132, 133, 136) for details.
- Hi-Rel, 4-finger BeCu #12 & #30 contacts are rated at 3 amps. See page 218 for details.
- Insulators are high temp. thermoplastic.

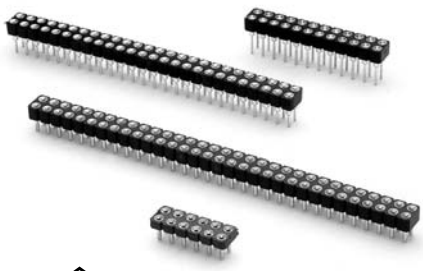

RoHS 2002/95/EC

Ordering Information

Fig. 1	**Series 410...001**	**Standard Solder Tail**
	410-XX-2_ _-41-001000	
	Specify # of pins →	02-64
Fig. 2	**Series 411...001**	**Long Solder Tail**
	411-13-2_ _-41-001000	
	Specify # of pins →	02-64
Fig. 3	**Series 415...001**	**Very Low Profile**
	415-XX-2_ _-41-001000	
	Specify # of pins →	02-64
Fig. 4	**Series 415...003**	**Ultra Low Profile**
	415-XX-2_ _-41-003000	
	Specify # of pins →	02-72

For Electrical, Mechanical & Enviromental Data, See pg. 4

XX=Plating Code See Below

For RoHS compliance select ◇ plating code.

SPECIFY PLATING CODE XX=	13◇		93			43◇	
Sleeve (Pin)	0,25µm Au		5,08µm Sn/Pb			5,08µm Sn	
Contact (Clip)	0,76µm Au		0,76µm Au			0,76µm Au	

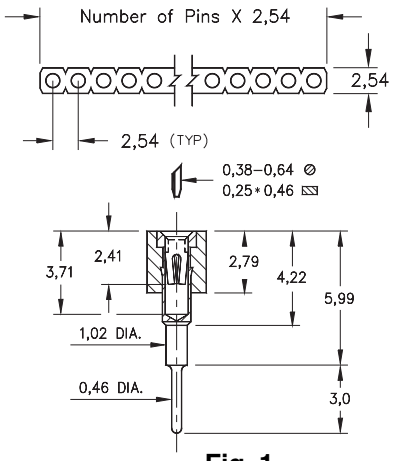

Fig. 1

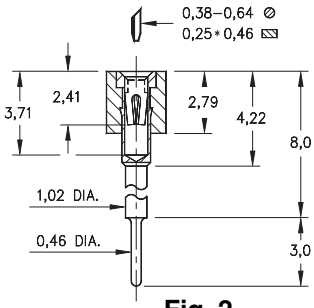

Fig. 2

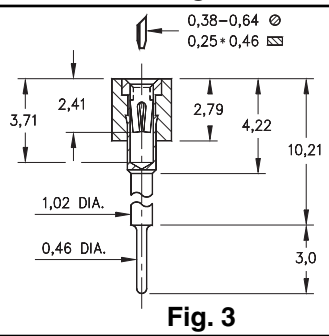

Fig. 3

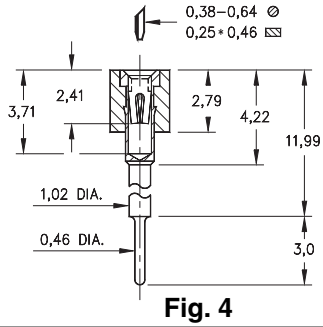

Fig. 4

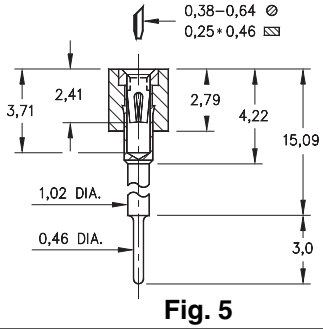

Fig. 5

- Elevated socket strips are available in 5 different heights:

  316...006 uses pin # 0153-1
  316...003 uses pin # 0153-2
  316...007 uses pin # 0153-3
  316...008 uses pin # 0153-4
  316...001 uses pin # 0153-5
  See page 138 for details.

- Hi-Rel, 4-finger BeCu #30 contact is rated at 3 amps. See page 218 for details.

- Insulators are high temp. thermoplastic.

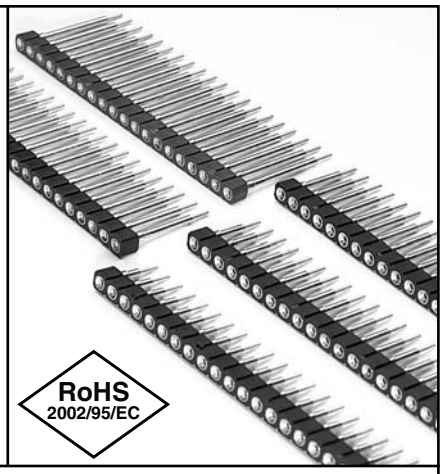

Ordering Information

Fig. 1	**Series 316...006**	**Standoff Height = 5,99**
	316-XX-1_ _-41-006000	
	Specify # of pins →	01-64
Fig. 2	**Series 316...003**	**Standoff Height = 8,0**
	316-XX-1_ _-41-003000	
	Specify # of pins →	01-64
Fig. 3	**Series 316...007**	**Standoff Height = 10,21**
	316-XX-1_ _-41-007000	
	Specify # of pins →	01-64
Fig. 4	**Series 316...008**	**Standoff Height = 11,99**
	316-XX-1_ _-41-008000	
	Specify # of pins →	01-64
Fig. 5	**Series 316...001**	**Standoff Height = 15,09**
	316-XX-1_ _-41-001000	
	Specify # of pins →	01-64

For Electrical, Mechanical & Enviromental Data, See pg. 4

XX=Plating Code See Below

For RoHS compliance select ◇ plating code.

SPECIFY PLATING CODE XX=			93			43◇	
Sleeve (Pin)			5,08µm Sn/Pb			5,08µm Sn	
Contact (Clip)			0,76µm Au			0,76µm Au	

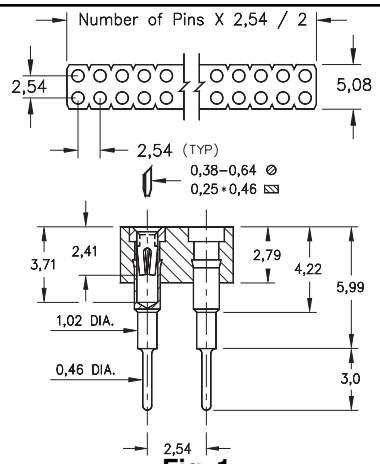

Fig. 1

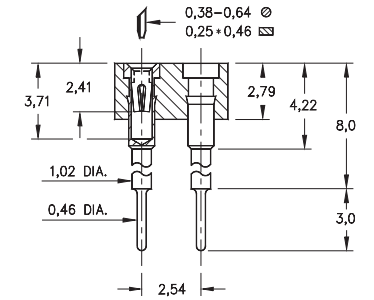

Fig. 2

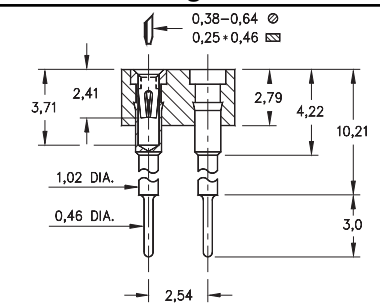

Fig. 3

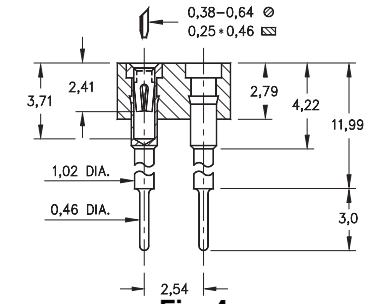

Fig. 4

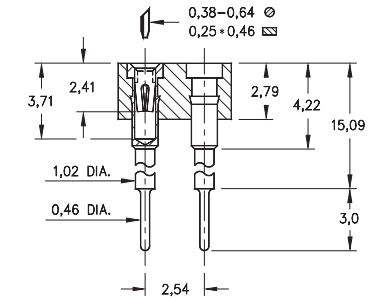

Fig. 5

- Elevated socket strips are available in 5 different standoff heights:

  416...006 uses pin # 0153-1
  416...003 uses pin # 0153-2
  416...007 uses pin # 0153-3
  416...008 uses pin # 0153-4
  416...001 uses pin # 0153-5
  See page 138 for details.

- Hi-Rel, 4-finger BeCu #30 contact is rated at 3 amps. See page 218 for details.

- Insulators are high temp. thermoplastic.

Ordering Information

Fig. 1	**Series 416...006**	**Standoff Height = 5,99**
	416-XX-2_ _-41-006000	
	Specify # of pins →	02-64
Fig. 2	**Series 416...003**	**Standoff Height = 8,0**
	416-XX-2_ _-41-003000	
	Specify # of pins →	02-64
Fig. 3	**Series 416...007**	**Standoff Height = 10,21**
	416-XX-2_ _-41-007000	
	Specify # of pins →	02-64
Fig. 4	**Series 416...008**	**Standoff Height = 11,99**
	416-XX-2_ _-41-008000	
	Specify # of pins →	02-64
Fig. 5	**Series 416...001**	**Standoff Height = 15,09**
	416-XX-2_ _-41-001000	
	Specify # of pins →	02-64

For Electrical, Mechanical & Enviromental Data, See pg. 4

XX=Plating Code See Below

For RoHS compliance select ◇ plating code.

SPECIFY PLATING CODE XX=			93			43◇	
Sleeve (Pin)			5,08µm Sn/Pb			5,08µm Sn	
Contact (Clip)			0,76µm Au			0,76µm Au	

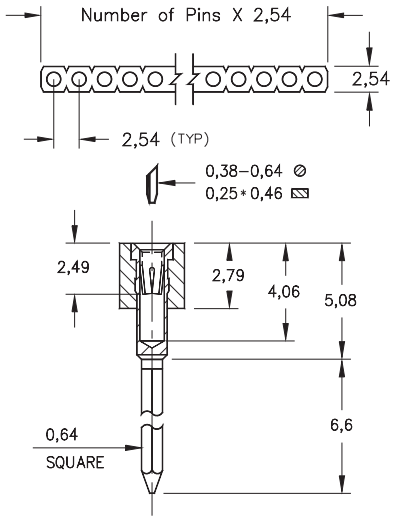

Fig. 1

- Wraposts available in 1 - 4 levels using MM pin numbers:

  1-Level uses pin # 0040-1
  2-Level uses pin # 0089-2
  3-Level uses pin # 0088-3
  4-Level uses pin # 0086-4
  See page 166 for details.

- Hi-Rel, 4-finger BeCu #30 contact is rated at 3 amps. See page 218 for details.

- Insulators are high temp. thermoplastic.

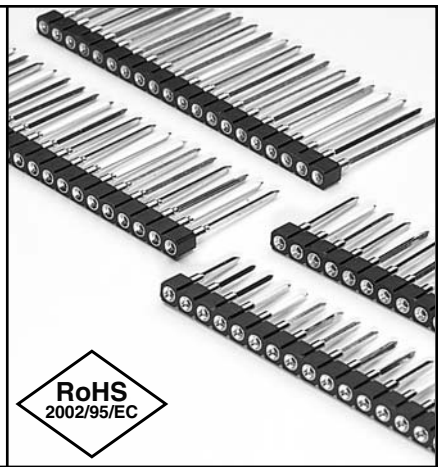

Ordering Information

Fig. 1	**Series 321...001**	**1 Level Wrapost**
	321-13-1_ _-41-001000	
	Specify # of pins →	01-64
Fig. 2	**Series 322...001**	**2 Level Wrapost**
	322-XX-1_ _-41-001000	
	Specify # of pins →	01-64
Fig. 3	**Series 323...001**	**3 Level Wrapost**
	323-XX-1_ _-41-001000	
	Specify # of pins →	01-64
Fig. 4	**Series 324...002**	**4 Level Wrapost**
	324-XX-1_ _-41-002000	
	Specify # of pins →	01-64

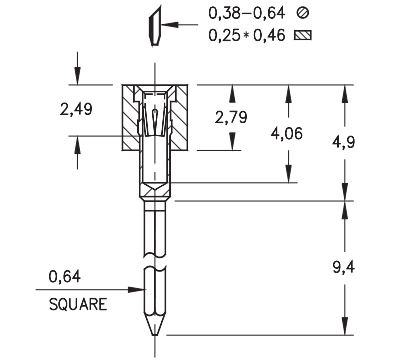

Fig. 2

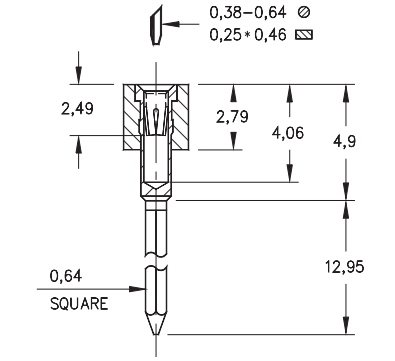

Fig. 3

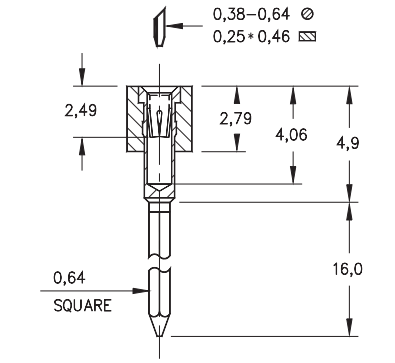

Fig. 4

For Electrical, Mechanical & Enviromental Data, See pg. 4

XX=Plating Code See Below

For RoHS compliance select ◇ plating code.

SPECIFY PLATING CODE XX=	13◇		93			43◇	
Sleeve (Pin)	0,25µm Au		5,08µm Sn/Pb			5,08µm Sn	
Contact (Clip)	0,76µm Au		0,76µm Au			0,76µm Au	

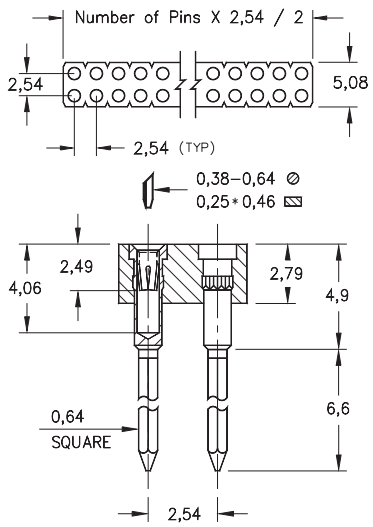

Fig. 1

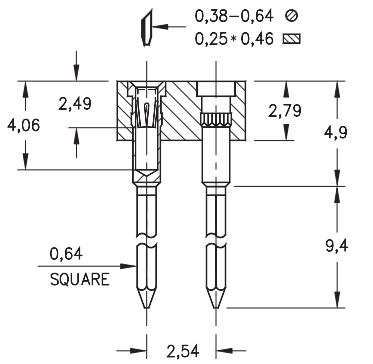

Fig. 2

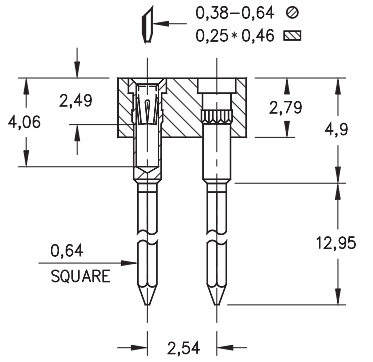

Fig. 3

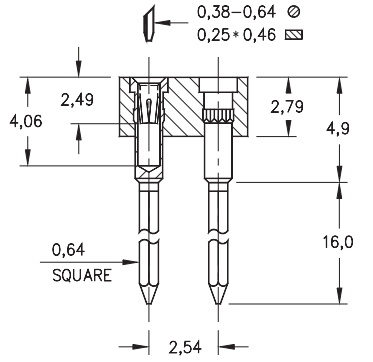

Fig. 4

- Wrapost double row strip sockets are available with 1 - 4 level wraposts:

  1-Level uses pin # 0040-1
  2-Level uses pin # 0089-2
  3-Level uses pin # 0088-3
  4-Level uses pin # 0086-4
  See page 166 for details.

- Hi-Rel, 4-finger BeCu #30 contact is rated at 3 amps. See page 218 for details.

- Insulators are high temp. thermoplastic.

Ordering Information

Fig. 1	**Series 421...001**	**1 Level Wrapost**
	421-XX-2_ _-41-001000	
	Specify # of pins →	02-64
Fig. 2	**Series 422...001**	**2 Level Wrapost**
	422-XX-2_ _-41-001000	
	Specify # of pins →	02-64
Fig. 3	**Series 423...001**	**3 Level Wrapost**
	423-XX-2_ _-41-001000	
	Specify # of pins →	02-64
Fig. 4	**Series 424...002**	**4 Level Wrapost**
	424-XX-2_ _-41-002000	
	Specify # of pins →	02-64

For Electrical, Mechanical & Enviromental Data, See pg. 4

XX=Plating Code See Below

For RoHS compliance select ◇ plating code.

SPECIFY PLATING CODE XX=	13◇		93			43◇	
Sleeve (Pin)	0,25µm Au		5,08µm Sn/Pb			5,08µm Sn	
Contact (Clip)	0,76µm Au		0,76µm Au			0,76µm Au	

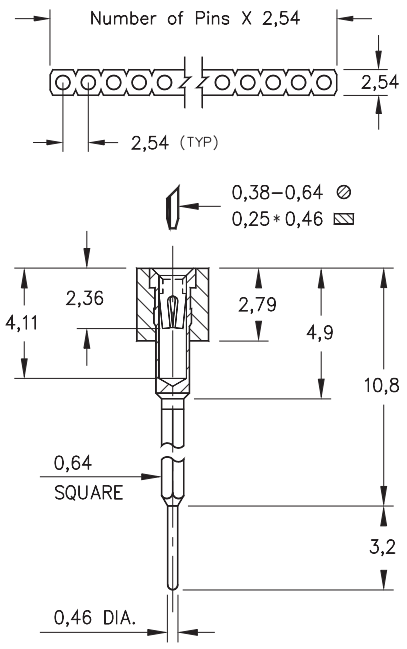

Fig. 1

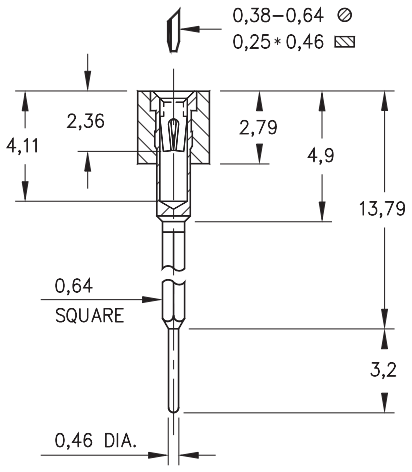

Fig. 2

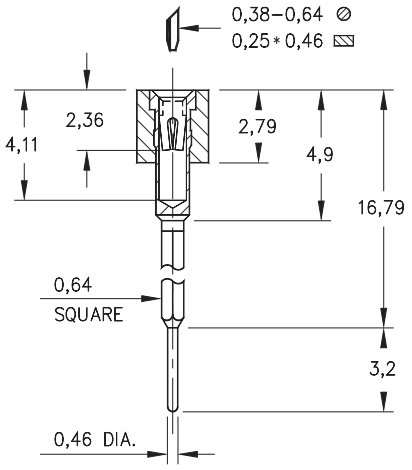

Fig. 3

- Wrapost / Solder tail combinations are available in 3 lengths using MM pin numbers:

  326...001 uses pin # 2601
  326...002 uses pin # 2602
  326...003 uses pin # 2603
  See page 167 for details.

- Hi-Rel, 4-finger BeCu #30 contact is rated at 3 amps. See page 218 for details.

- Insulators are high temp. thermoplastic.

Ordering Information

Fig. 1	**Series 326...001**
	326-XX-1_ _-41-001000
	Specify # of pins → 01-64
Fig. 2	**Series 326...002**
	326-XX-1_ _-41-002000
	Specify # of pins → 01-64
Fig. 3	**Series 326...003**
	326-XX-1_ _-41-003000
	Specify # of pins → 01-64

For Electrical, Mechanical & Enviromental Data, See pg. 4

XX=Plating Code See Below

For RoHS compliance select ◇ plating code.

SPECIFY PLATING CODE XX=			93			43◇	
Sleeve (Pin)			5,08µm Sn/Pb			5,08µm Sn	
Contact (Clip)			0,76µm Au			0,76µm Au	

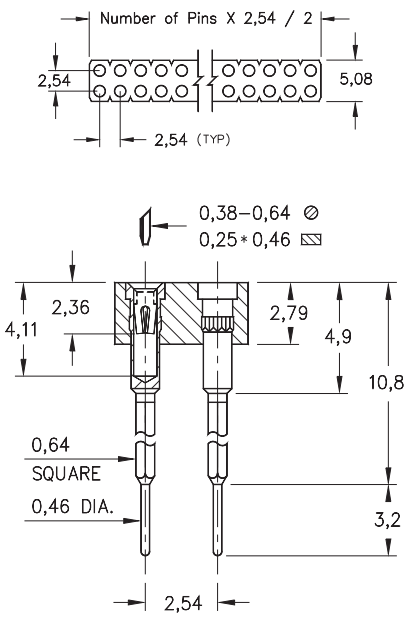

Fig. 1

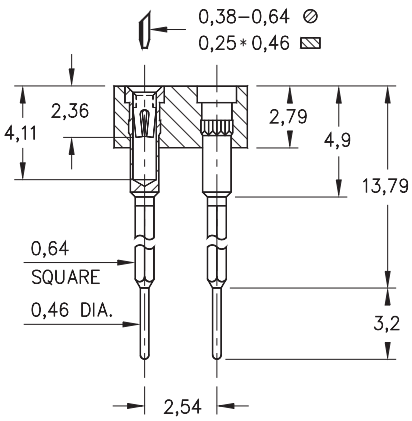

Fig. 2

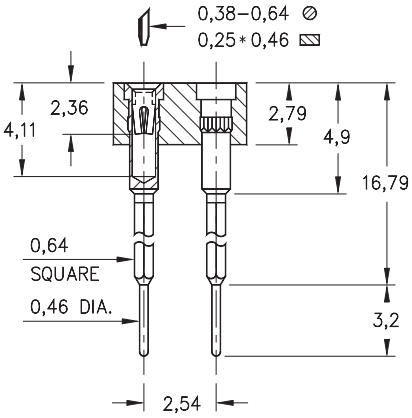

Fig. 3

- Wrapost / Solder tail combination for interconnect purposes are available in 3 lengths using pin numbers:

  426...001 uses pin # 2601
  426...002 uses pin # 2602
  426...003 uses pin # 2603
  See page 167 for details.

- Hi-Rel, 4-finger BeCu #30 contact is rated at 3 amps. See page 218 for details.

- Insulators are high temp. thermoplastic.

Ordering Information

Fig. 1	**Series 426...001**	**1 Level Wrapost**
	426-XX-2_ _-41-001000	
	Specify # of pins →	02-64
Fig. 2	**Series 426...002**	**2 Level Wrapost**
	426-XX-2_ _-41-002000	
	Specify # of pins →	02-64
Fig. 3	**Series 426...003**	**3 Level Wrapost**
	426-XX-2_ _-41-003000	
	Specify # of pins →	02-64

For Electrical, Mechanical & Enviromental Data, See pg. 4

XX=Plating Code See Below

For RoHS compliance select ◇ plating code.

SPECIFY PLATING CODE XX=	13◇		93			43◇	
Sleeve (Pin)	0,25µm Au		5,08µm Sn/Pb			5,08µm Sn	
Contact (Clip)	0,76µm Au		0,76µm Au			0,76µm Au	

SINGLE-IN-LINE SOCKETS
2,54 Grid Solderless Press-Fit
Single Row

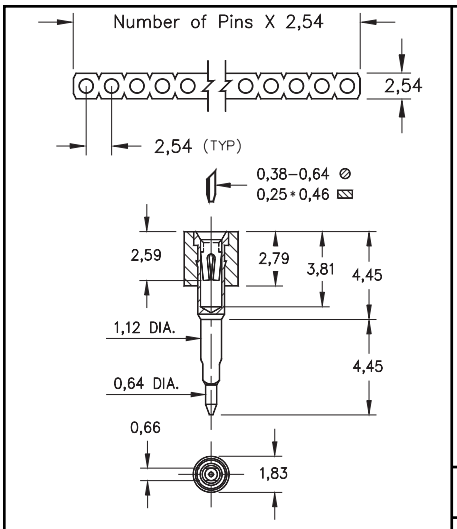

Fig. 1

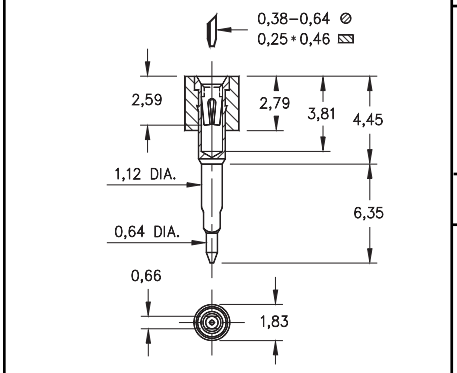

Fig. 2

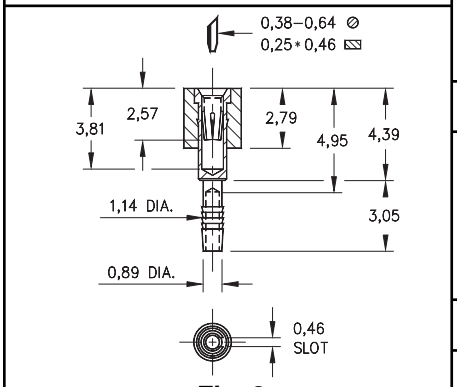

Fig. 3

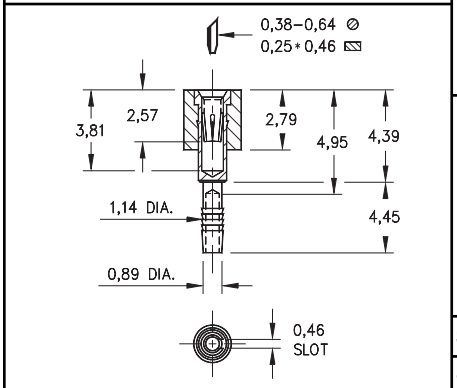

Fig. 4

- Unique compliant tail pins conform to the plated through-hole without stressing the inner layers of a multilayer board.
- Recommended plated through-hole for 304 series: 0,91 - 1,04 use a 1.1mm drill prior to plating. Using MM #0477 & #0478 pins, see page 133 for details.
- For 346 series: 1,02 ± 0,07 finished plated through-hole. Using MM #4612 & #4613 pins, see page 133 for details. Patent No. 4,799,904.
- Hi-Rel, 4 finger BeCu #30 contact is rated at 3 amps. See page 218 for details.
- Insulators are high temp. thermoplastic.

Ordering Information

Series 304...770 SOLDERLESS PRESS-FIT

Fig. 1	(For 1,57 Thick Boards) 304-13-1_ _-41-770000 **Specify # of pins** → 01-64

Series 304...780 SOLDERLESS PRESS-FIT

Fig. 2	(For 3,18 Thick Boards) 304-13-1_ _-41-780000 **Specify # of pins** → 01-64

Mill-Max recommends plating Code 13 for Series 304...770 and 304...780

Series 346...012 COMPLIANT SOLDERLESS PRESS-FIT

Fig. 3	(For 1,52 - 2,54 Thick Boards) 346-XX-1_ _-41-012000 **Specify # of pins** → 01-64

Series 346...013 COMPLIANT SOLDERLESS PRESS-FIT

Fig. 4	(For 2,29 - 3,3 Thick Boards) 346-XX-1_ _-41-013000 **Specify # of pins** → 01-64

For Electrical, Mechanical & Enviromental Data, See pg. 4

XX=Plating Code See Below

For RoHS compliance select ◇ plating code.

SPECIFY PLATING CODE XX=	13◇		93	99		43◇	44◇
Sleeve (Pin)	0,25µm Au		5,08µm Sn/Pb	5,08µm Sn/Pb		5,08µm Sn	5,08µm Sn
Contact (Clip)	0,76µm Au		0,76µm Au	5,08µm Sn/Pb		0,76µm Au	0,76µm Au

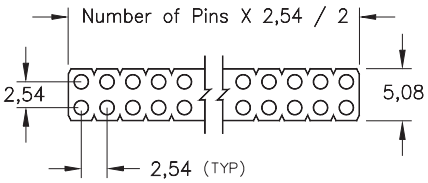

- Compliant tail solderless press-fit: MM #4612 or #4613 pins. Use series 446...012 for 1,52 - 3,05 thick boards, and series 446...013 for 2,29 - 3,30 thick boards. See Page 133 for details.
- Compliant tail receptacles can be inserted and removed without any degradation of the plated through-hole.
- Hi-Rel, 4 finger BeCu #30 contact is rated at 3 amps. See page 218 for details.
- Insulators are high temp. thermoplastic.

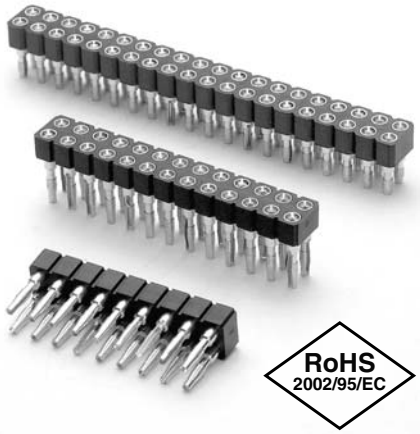

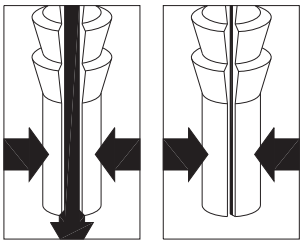

APPLICATION OF COMPLIANT TAIL PINS

Mill-Max's patented* compliant tail features precision-machined pins that are hollow and slotted to conform to a 1,02 ± 0,08 diameter PTH. As the pin is inserted, the slot compresses to fit the PTH, thus avoiding damage (see illustration at left). The pin's tail has fine serrations that form a perfect "gas tight" connection that doesn't require soldering. And since the pin doesn't damage the hole, compliant tail sockets and connectors can be easily replaced.
*Patent No. 4,799,904.

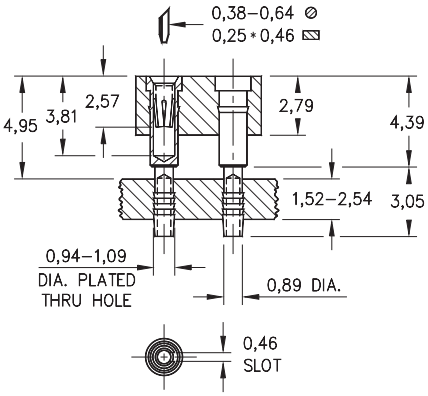

Fig. 1

Ordering Information

Fig. 1	**Series 446...012** 446-XX-2_ _-41-012000 **Specify # of pins** → 02-64
Fig. 2	**Series 446...013** 446-XX-2_ _-41-013000 **Specify # of pins** → 02-64

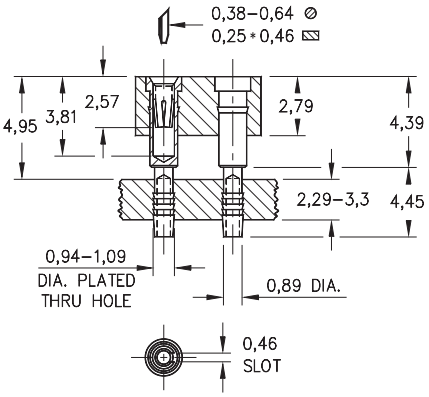

Fig. 2

For Electrical, Mechanical & Enviromental Data, See pg. 4

XX=Plating Code See Below

For RoHS compliance select ◇ plating code.

SPECIFY PLATING CODE XX=	13◇		93	99		43◇	44◇
Sleeve (Pin)	0,25µm Au		5,08µm Sn/Pb	5,08µm Sn/Pb		5,08µm Sn	5,08µm Sn
Contact (Clip)	0,76µm Au		0,76µm Au	5,08µm Sn/Pb		0,76µm Au	0,76µm Au

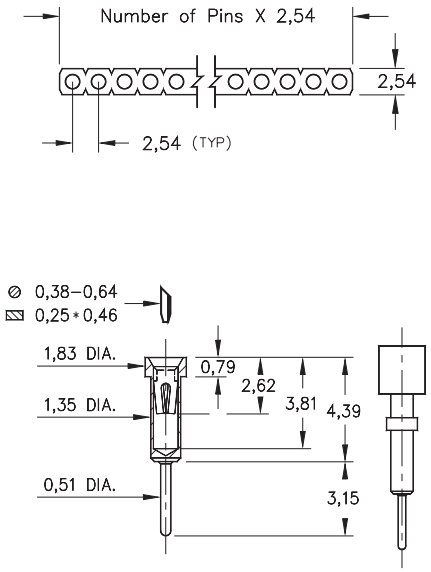

Fig. 1

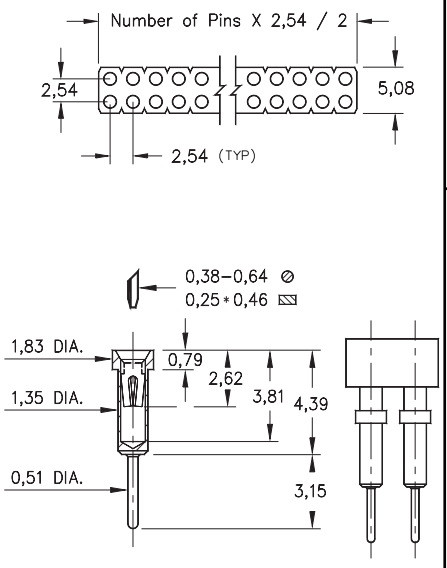

Fig. 2

- Standard solder tail receptacles can be mounted as a low profile receptacle or by the solder tail for use in smaller diameter holes.
- Series 712 uses MM #0255 pins. See page 136 for details.
- Hi-Rel, 4-finger BeCu #30 contact is rated at 3 amps. See page 218 for details.
- Insulators are high temp. thermoplastic.

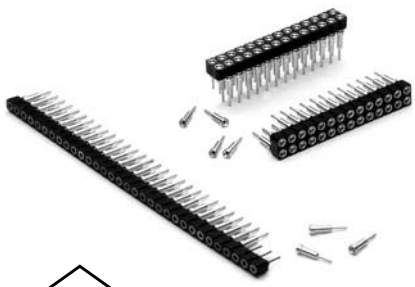

RoHS 2002/95/EC

Ordering Information

	Single Row (0,71 OR 1,4 min. mounting holes)
Fig. 1	712-XX-1_ _-41-001000 **Specify # of pins** → 01-64

	Double Row (0,71 OR 1,4 min. mounting holes)
Fig. 2	712-XX-2_ _-41-001000 **Specify # of pins** → 02-64

For Electrical, Mechanical & Enviromental Data, See pg. 4

XX=Plating Code See Below

For RoHS compliance select ◇ plating code.

SPECIFY PLATING CODE XX=	13◇		93			43◇	
Sleeve (Pin)	0,25µm Au		5,08µm Sn/Pb			5,08µm Sn	
Contact (Clip)	0,76µm Au		0,76µm Au			0,76µm Au	

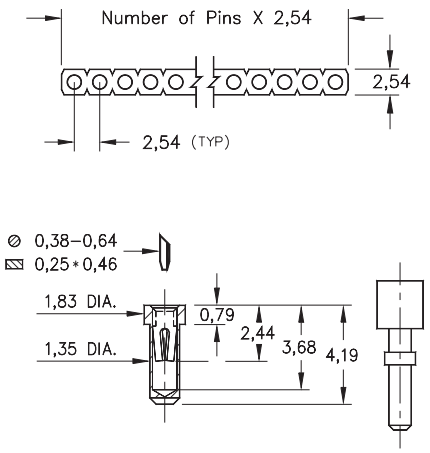

Fig. 1

- Low profile receptacles sit 0,79 above the board.
- Series 714 uses MM #1401 & MM # 1407 pin receptacles. See pages 128 and 141 for details.
- Hi-Rel, 4-finger BeCu #30 contact is used in the #1401 receptacle and a BeCu #11 contact is used in the #1407. Both contacts are rated at 3 amps. See pages 217 & 218 for details.
- Insulators are high temp. thermoplastic.

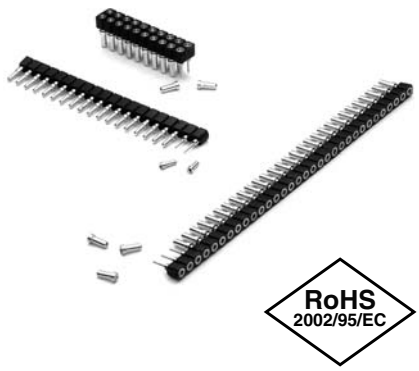

Ordering Information

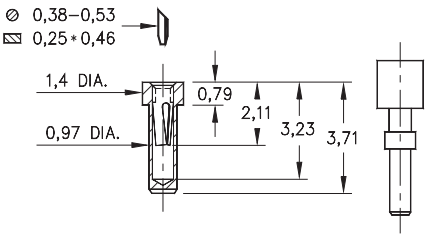

Fig. 2

Fig. 1	**Single Row (1,4 min. mounting hole)**
	714-XX-1_ _-41-001000
	Specify # of pins → 01-64
Fig. 2	**Single Row (0,99 min. mounting hole)**
	714-XX-1_ _-31-007000
	Specify # of pins → 01-64
Fig. 3	**Double Row (1,4 min. mounting hole)**
	714-XX-2_ _-41-001000
	Specify # of pins → 02-64
Fig. 4	**Double Row (0,99 min. mounting hole)**
	714-XX-2_ _-31-007000
	Specify # of pins → 02-64

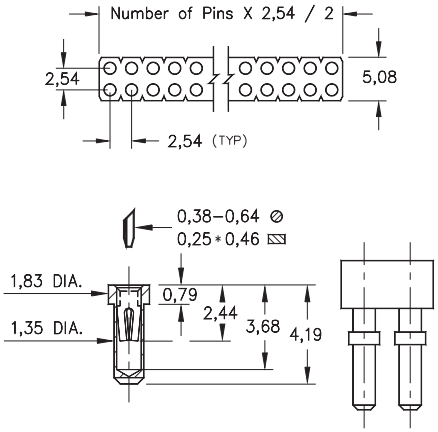

Fig. 3

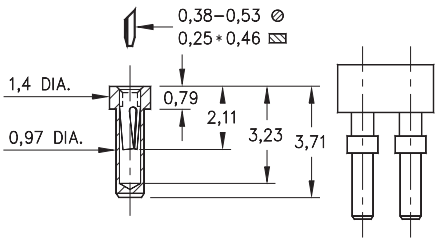

Fig. 4

For Electrical, Mechanical & Enviromental Data, See pg. 4

XX=Plating Code See Below

For RoHS compliance select ◇ plating code.

SPECIFY PLATING CODE XX=			93			43◇	
Sleeve (Pin)			5,08µm Sn/Pb			5,08µm Sn	
Contact (Clip)			0,76µm Au			0,76µm Au	

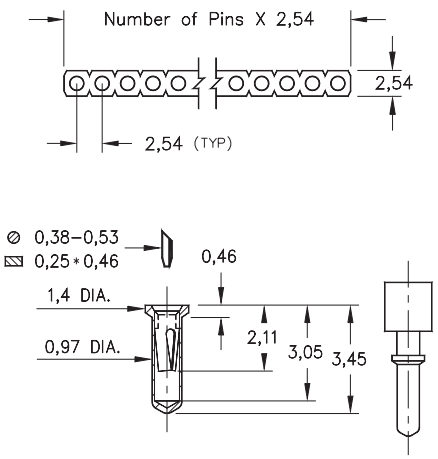

Fig. 1

- Ultra low profile receptacles sit 0,46 above the board.
- Series 714 uses MM #0552-1 and MM #0552-2 pin receptacles. See page 129 for details.
- Hi-Rel, 3-finger BeCu #11 contact is rated at 3 amps. See page 217 for details.
- Insulators are high temp. thermoplastic.

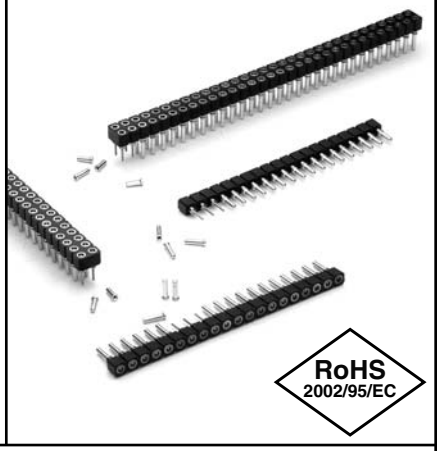

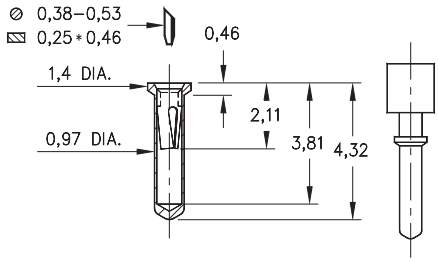

Fig. 2

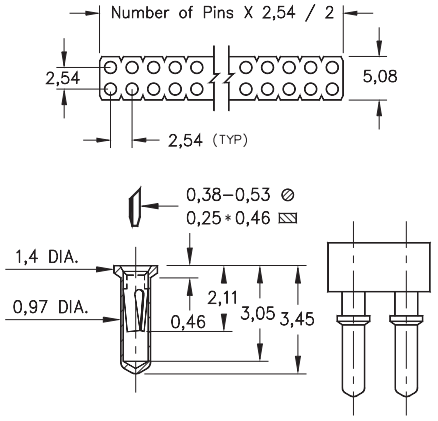

Fig. 3

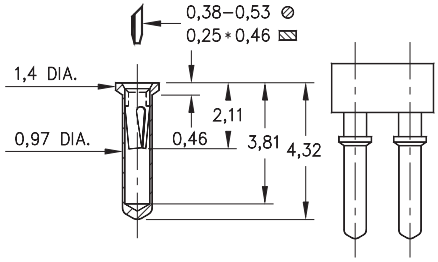

Fig. 4

Ordering Information

Fig. 1	**Single Row (0,99 min. mounting hole)** 714-XX-1_ _-31-012000 **Specify # of pins** → 01-64
Fig. 2	**Single Row (0,99 min. mounting hole)** 714-XX-1_ _-31-018000 **Specify # of pins** → 01-64
Fig. 3	**Double Row (0,99 min. mounting hole)** 714-XX-2_ _-31-012000 **Specify # of pins** → 02-64
Fig. 4	**Double Row (0,99 min. mounting hole)** 714-XX-2_ _-31-018000 **Specify # of pins** → 02-64

For Electrical, Mechanical & Enviromental Data, See pg. 4

XX=Plating Code See Below

For RoHS compliance select ◇ plating code.

SPECIFY PLATING CODE XX=			93			43◇	
Sleeve (Pin)			5,08µm Sn/Pb			5,08µm Sn	
Contact (Clip)			0,76µm Au			0,76µm Au	

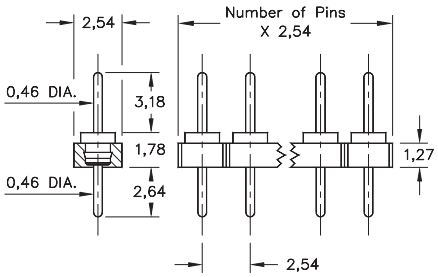

Fig. 1

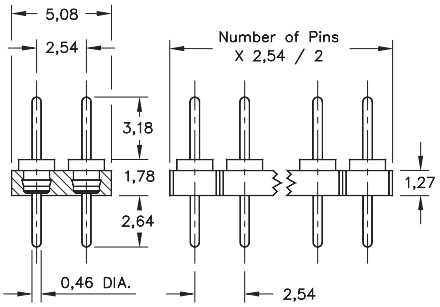

Fig. 2

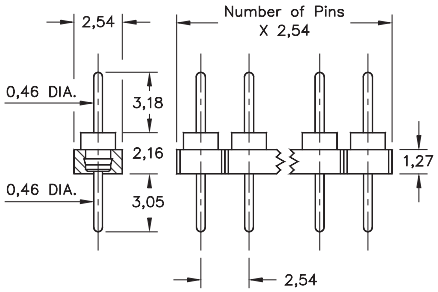

Fig. 3

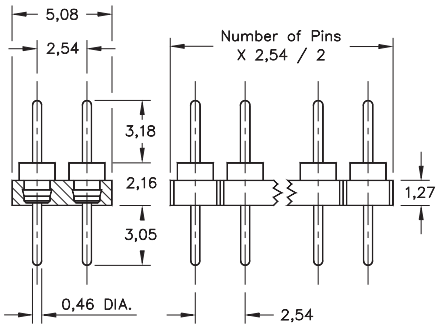

Fig. 4

- Series 335 and 435 single and double row PCB interconnects offer the lowest profile available 1,78.
- Series 364 and 464 single and double row PCB interconnects offer 2,16 profile above board.
- Series 335 and 435 use MM #3516 pins. See page 179 for details.
- Series 364 and 464 use MM #6458 pins. See page 180 for details.
- Insulators are high temp. thermoplastic.

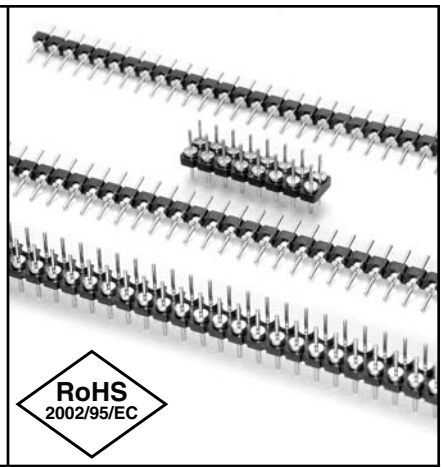

Ordering Information

Fig. 1	**Single Row**	**1,78 Profile Pin Header**
	335-XX-1_ _-00-160000	
	Specify # of pins →	01-32
Fig. 2	**Double Row**	**1,78 Profile Pin Header**
	435-XX-2 _ _-00-160000	
	Specify # of pins →	02-72
Fig. 3	**Single Row**	**2,16 Profile Pin Header**
	364-10-1_ _-00-580000	
	Specify # of pins →	01-32
Fig. 4	**Double Row**	**2,16 Profile Pin Header**
	464-10-2 _ _-00-580000	
	Specify # of pins →	02-72

For Electrical, Mechanical & Enviromental Data, See pg. 4

XX=Plating Code See Below

For RoHS compliance select ◇ plating code.

SPECIFY PLATING CODE XX=	10◇	90	40◇	
Pin Plating	0,25µ Au	5,08µ Sn/Pb	5,08µ Sn	

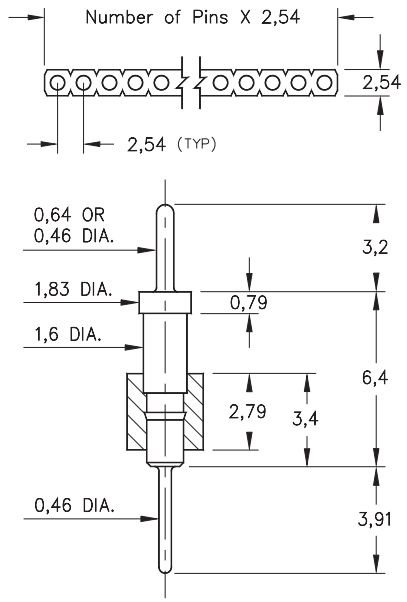

Fig. 1

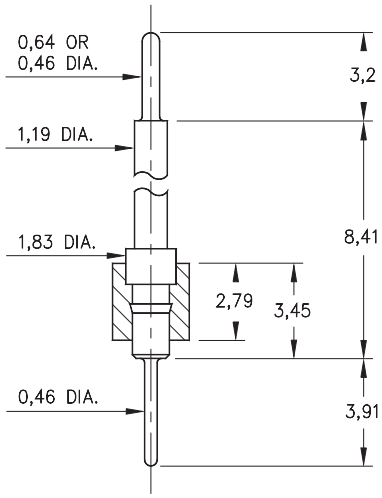

Fig. 2

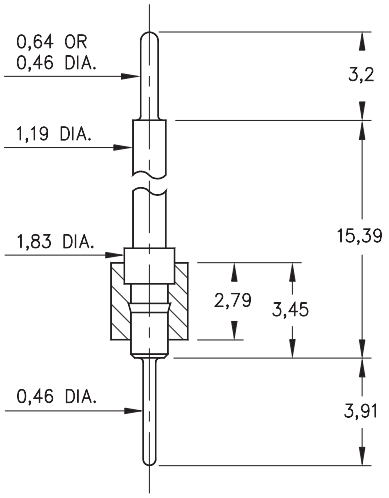

Fig. 3

- Series 351 Interconnect header strips come in three lengths with 0,46 dia. pluggable solder tails at one end and 0,64 dia. pins at the other, see series:
  351...003 uses pin #5503
  351...004 uses pin #5504
  351...005 uses pin #5505
- 0,46 pluggable solder tails are available at both ends, please see series:
  351...009 uses pin #5509
  351...010 uses pin #5510
  351...011 uses pin #5511
  See pages 179 & 181 for details.
- Insulators are high temp. thermoplastic.

Ordering Information

Fig. 1	Series 351...003	0,46 / 0,64	Solder Tails
	351-10-1_ _-00-003000		
	Specify # of pins → 01-64		
	Series 351...009	0,46 / 0,46	Solder Tails
	351-10-1_ _-00-009000		
	Specify # of pins → 01-64		
Fig. 2	Series 351...004	0,46 / 0,64	Solder Tails
	351-10-1_ _-00-004000		
	Specify # of pins → 01-64		
	Series 351...010	0,46 / 0,46	Solder Tails
	351-10-1_ _-00-010000		
	Specify # of pins → 01-64		
Fig. 3	Series 351...005	0,46 / 0,64	Solder Tails
	351-10-1_ _-00-005000		
	Specify # of pins → 01-64		
	Series 351...011	0,46 / 0,46	Solder Tails
	351-10-1_ _-00-011000		
	Specify # of pins → 01-64		

For Electrical, Mechanical & Enviromental Data, See pg. 4

For RoHS compliance select ◇ plating code.

PLATING CODE XX=	10◇			
Pin Plating	0,25µ Au			

HEADER STRIPS
2,54 Grid Interconnect
Double Row

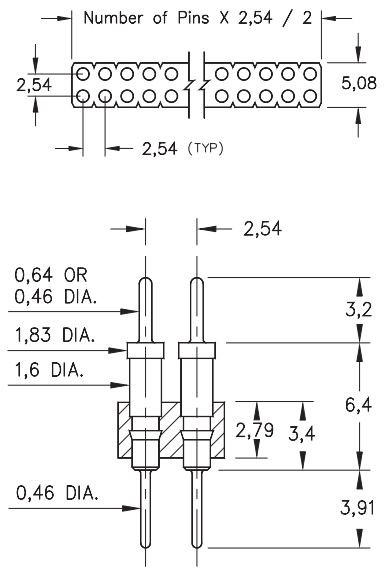

Fig. 1

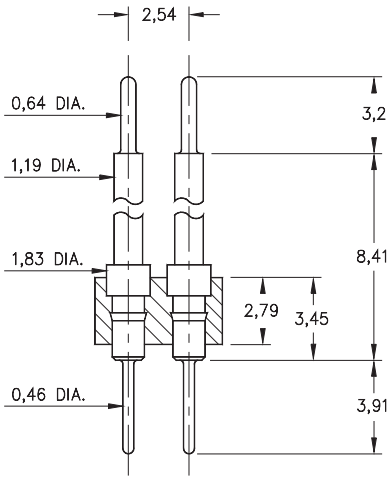

Fig. 2

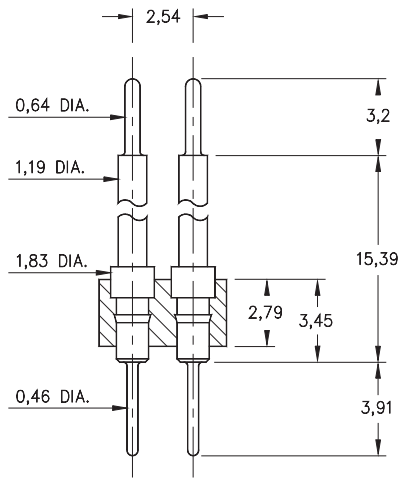

Fig. 3

- Series 451 Interconnect header strips come in three lengths with 0,46 dia. pluggable solder tails at one end and 0,64 dia. pins at the other, see series:
  451...003 uses pin #5503
  451...004 uses pin #5504
  451...005 uses pin #5505
- 0,46 pluggable solder tails are available at both ends, please see series:
  451...009 uses pin #5509
  451...010 uses pin #5510
  451...011 uses pin #5511
  See pages 179 & 181 for details.
- Insulators are high temp. thermoplastic.

Ordering Information

Fig. 1	**Series 451...003**	**0,46 / 0,64 Solder Tails**
	451-10-2_ _-00-003000	
	Specify # of pins →	02-64
	Series 451...009	**0,46 / 0,46 Solder Tails**
	451-10-2_ _-00-009000	
	Specify # of pins →	02-64
Fig. 2	**Series 451...004**	**0,46 / 0,64 Solder Tails**
	451-10-2_ _-00-004000	
	Specify # of pins →	02-64
	Series 451...010	**0,46 / 0,46 Solder Tails**
	451-10-2_ _-00-010000	
	Specify # of pins →	02-64
Fig. 3	**Series 451...005**	**0,46 / 0,64 Solder Tails**
	451-10-2_ _-00-005000	
	Specify # of pins →	02-64
	Series 451...011	**0,46 / 0,46 Solder Tails**
	451-10-2_ _-00-011000	
	Specify # of pins →	02-64

For Electrical, Mechanical & Enviromental Data, See pg. 4

For RoHS compliance select ◇ plating code.

PLATING CODE XX=	10◇			
Pin Plating	0,25µ Au			

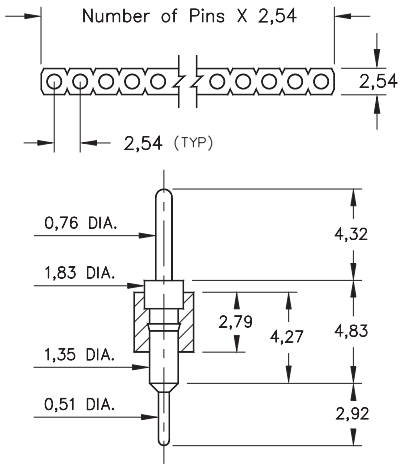

Fig. 1

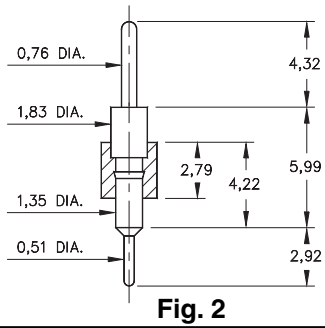

Fig. 2

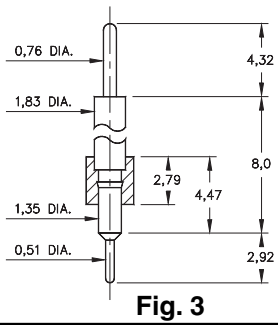

Fig. 3

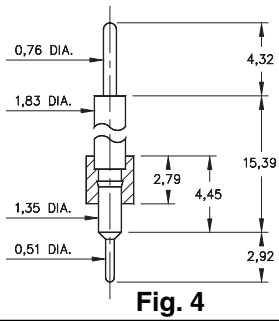

Fig. 4

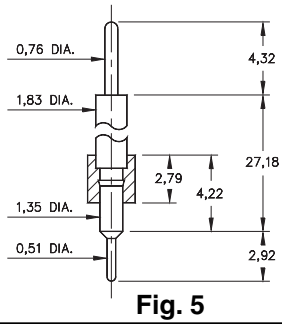

Fig. 5

- Series 334 Interconnect header strips are available in 5 lengths:

  334...020 uses pin #3402 (L = 4,83)
  334...010 uses pin #3401 (L = 5,99)
  334...050 uses pin #3405 (L = 8,0)
  334...000 uses pin #3400 (L = 15,39)
  334...100 uses pin #3410 (L = 27,18)
  See pages 182 for details.

- Strips come with 0,51 pluggable solder tails at one end and 0,76 tails at the other.
- Insulators are high temp. thermoplastic.

Ordering Information

Fig. 1	**Series 334...020**	**0,51 / 0,76 Solder Tails**
	334-XX-1_ _-00-020000	
	Specify # of pins →	01-64
Fig. 2	**Series 334...010**	**0,51 / 0,76 Solder Tails**
	334-XX-1_ _-00-010000	
	Specify # of pins →	01-64
Fig. 3	**Series 334...050**	**0,51 / 0,76 Solder Tails**
	334-XX-1_ _-00-050000	
	Specify # of pins →	01-64
Fig. 4	**Series 334...000**	**0,51 / 0,76 Solder Tails**
	334-XX-1_ _-00-000000	
	Specify # of pins →	01-64
Fig. 5	**Series 334...100**	**0,51 / 0,76 Solder Tails**
	334-XX-1_ _-00-100000	
	Specify # of pins →	01-64

For Electrical, Mechanical & Enviromental Data, See pg. 4

XX=Plating Code See Below

For RoHS compliance select ◇ plating code.

SPECIFY PLATING CODE XX=	10◇	90	40◇
Pin Plating	0,25µ Au	5,08µ Sn/Pb	5,08µ Sn

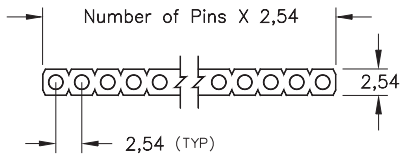

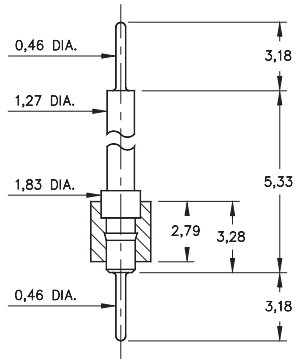

Fig. 1

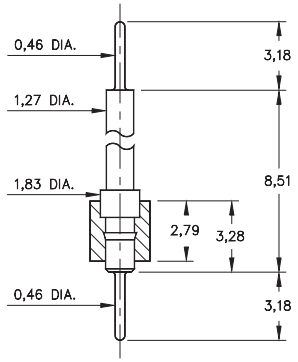

Fig. 2

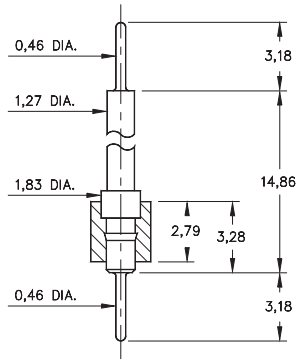

Fig. 3

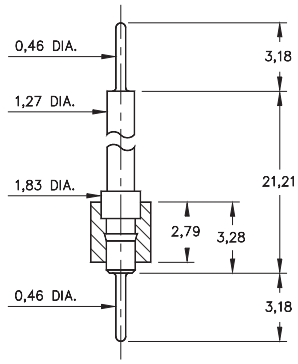

Fig. 4

- Series 342 Interconnect Header strips come in four heights with 0,46 dia. pluggable solder tails at both ends.

  342...591 uses pin #4259-1 (L = 5,33)
  342...592 uses pin #4259-2 (L = 8,51)
  342...593 uses pin #4259-3 (L = 14,86)
  342...594 uses pin #4259-4 (L = 21,21)
  See pages 179 for details.

- Insulators are high temp. thermoplastic.

Ordering Information

Fig. 1	**Series 342...591**	**0,46 / 0,46 Solder Tails**
	342-XX-1_ _-00-591000	
	Specify # of pins →	01-64
Fig. 2	**Series 342...592**	**0,46 / 0,46 Solder Tails**
	342-XX-1_ _-00-592000	
	Specify # of pins →	01-64
Fig. 3	**Series 342...593**	**0,46 / 0,46 Solder Tails**
	342-XX-1_ _-00-593000	
	Specify # of pins →	01-64
Fig. 4	**Series 342...594**	**0,46 / 0,46 Solder Tails**
	342-XX-1_ _-00-594000	
	Specify # of pins →	01-64

For Electrical, Mechanical & Enviromental Data, See pg. 4

XX=Plating Code See Below

For RoHS compliance select ◇ plating code.

SPECIFY PLATING CODE XX=	10◇	90	40◇
Pin Plating	0,25µ Au	5,08µ Sn/Pb	5,08µ Sn

HEADER STRIPS
2,54 Grid Board Stacking Headers
Double Row

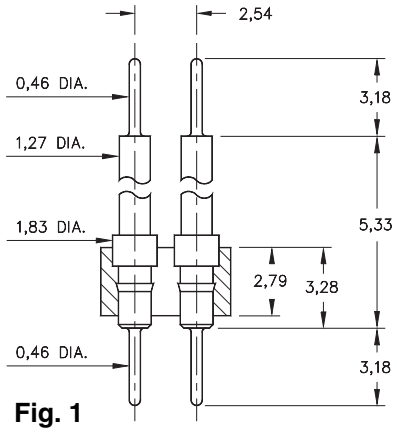

Fig. 1

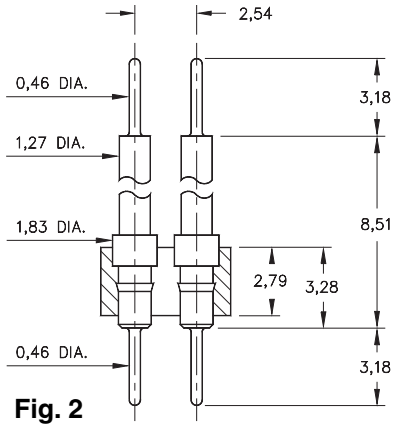

Fig. 2

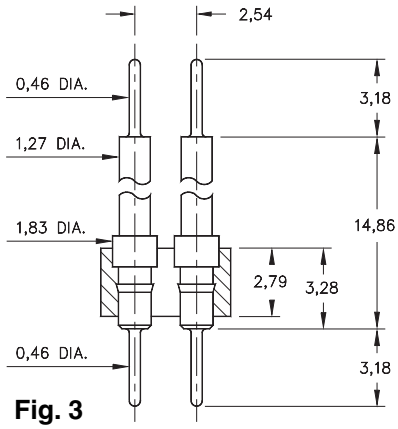

Fig. 3

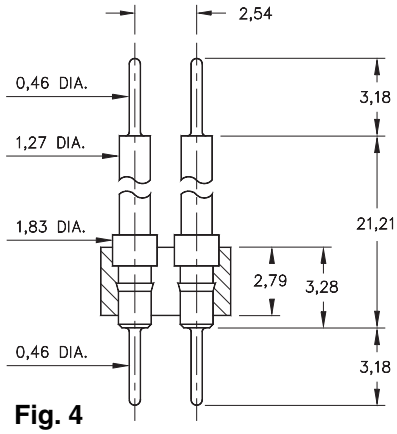

Fig. 4

- Series 442 Interconnect Header strips come in four heights with 0,46 dia. pluggable solder tails at both ends.

  442...591 uses pin #4259-1 (L = 5,33)
  442...592 uses pin #4259-2 (L = 8,51)
  442...593 uses pin #4259-3 (L = 14,86)
  442...594 uses pin #4259-4 (L = 21,21)
  See pages 179 for details.

- Insulators are high temp. thermoplastic.

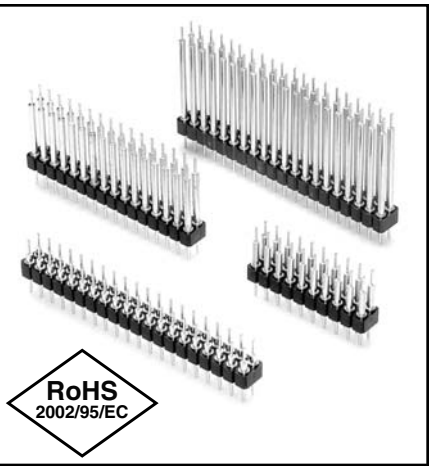

Ordering Information

Fig. 1	**Series 442...591**	**0,46 / 0,46 Interconnect**
	442-XX-2_ _-00-591000	
	Specify # of pins →	02-64
Fig. 2	**Series 442...592**	**0,46 / 0,46 Interconnect**
	442-XX-2_ _-00-592000	
	Specify # of pins →	02-64
Fig. 3	**Series 442...593**	**0,46 / 0,46 Interconnect**
	442-XX-2_ _-00-593000	
	Specify # of pins →	02-64
Fig. 4	**Series 442...594**	**0,46 / 0,46 Interconnect**
	442-XX-2_ _-00-594000	
	Specify # of pins →	02-64

For Electrical, Mechanical & Enviromental Data, See pg. 4

XX=Plating Code See Below

For RoHS compliance select ◇ plating code.

SPECIFY PLATING CODE XX=	10◇	90	40◇
Pin Plating	0,25µ Au	5,08µ Sn/Pb	5,08µ Sn

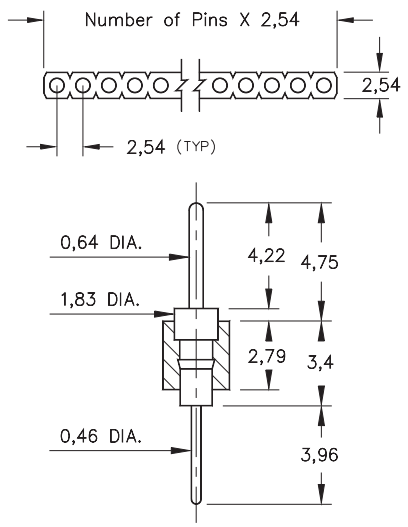

Fig. 1

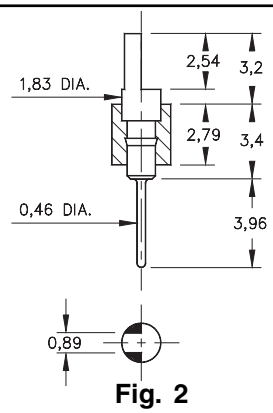

Fig. 2

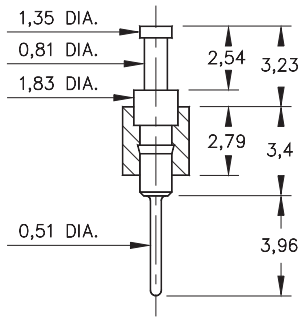

Fig. 3

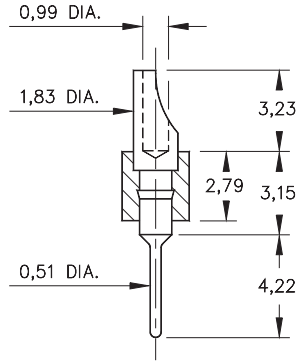

Fig. 4

- Series 350, 360, 370 & 380 single row Header strips come with various styles (pin, slotted head, turret and solder cup) with pluggable solder tails.

  350...001 uses pin #0290
  360...001 uses pin #0282
  370...001 uses pin #0700
  380...001 uses pin #8000
  See pages 182 & 183 for details.

- Insulators are high temp. thermoplastic.

RoHS 2002/95/EC

Ordering Information

Fig. 1	**Series 350...001**	**0,64 Pin / 0,46 Solder Tail**
	350-XX-1_ _-00-001000	
	Specify # of pins →	01-64
Fig. 2	**Series 360...001**	**Slotted Head / Solder Tail**
	360-XX-1_ _-00-001000	
	Specify # of pins →	01-64
Fig. 3	**Series 370...001**	**Turret / Solder Tail**
	370-XX-1_ _-00-001000	
	Specify # of pins →	01-64
Fig. 4	**Series 380...001**	**Solder Cup / Solder Tail**
	380-XX-1_ _-00-001000	
	Specify # of pins →	01-64

For Electrical, Mechanical & Enviromental Data, See pg. 4

XX=Plating Code See Below

For RoHS compliance select ◇ plating code.

SPECIFY PLATING CODE XX=	10◇	90	40◇
Pin Plating	0,25µ Au	5,08µ Sn/Pb	5,08µ Sn

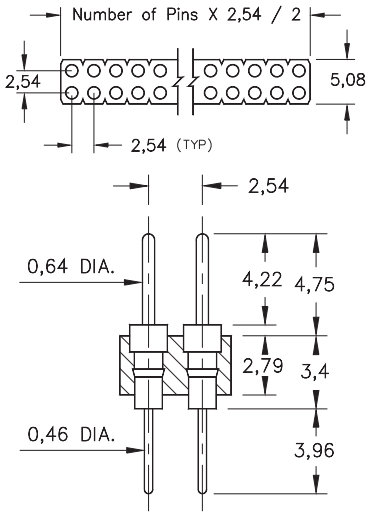

Fig. 1

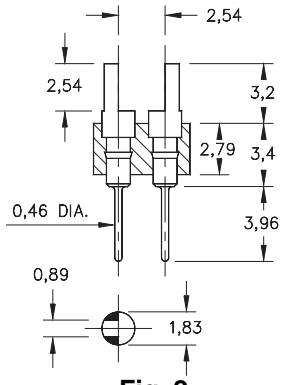

Fig. 2

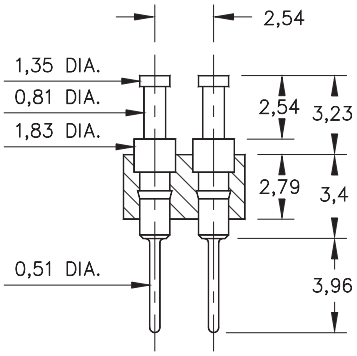

Fig. 3

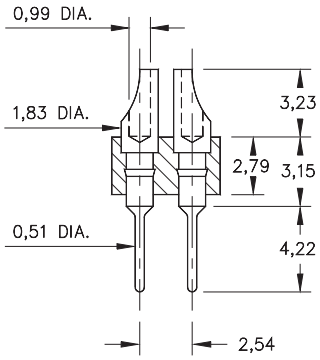

Fig. 4

- Series 450, 460, 470 & 480 double row Header strips come with various styles (pin, slotted head, turret and solder cup) with pluggable solder tails.

  450...001 uses pin #0290
  460...001 uses pin #0282
  470...001 uses pin #0700
  480...001 uses pin #8000
  See pages 182 & 183 for details.

- Insulators are high temp. thermoplastic.

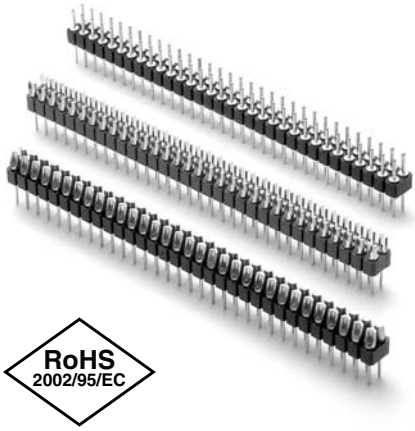

Ordering Information

Fig. 1	**Series 450...001**	**Pin / Solder Tail**
	450-XX-2_ _-00-001000	
	Specify # of pins →	02-64
Fig. 2	**Series 460...001**	**Slotted Head / Solder Tail**
	460-10-2_ _-00-001000	
	Specify # of pins →	02-64
Fig. 3	**Series 470...001**	**Turret / Solder Tail**
	470-XX-2_ _-00-001000	
	Specify # of pins →	02-64
Fig. 4	**Series 480...001**	**Solder Cup / Solder Tail**
	480-10-2_ _-00-001000	
	Specify # of pins →	02-64

For Electrical, Mechanical & Enviromental Data, See pg. 4

XX=Plating Code See Below

For RoHS compliance select ◇ plating code.

SPECIFY PLATING CODE XX=	10◇	90	40◇	
Pin Plating	0,25µ Au	5,08µ Sn/Pb	5,08µ Sn	

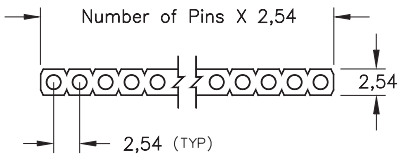

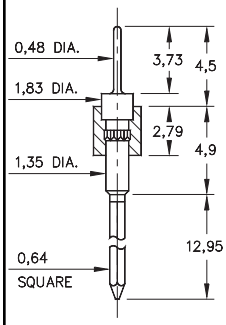

Fig. 1

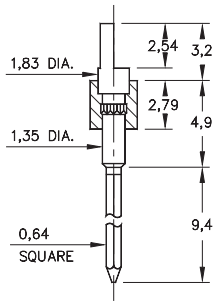

Fig. 2

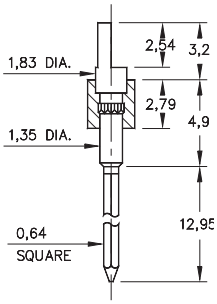

Fig. 3

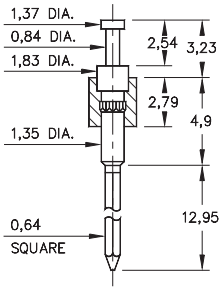

Fig. 4

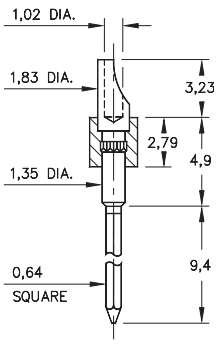

Fig. 5

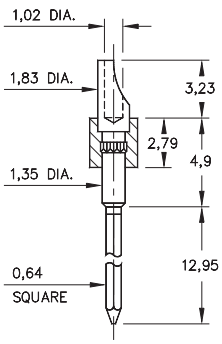

Fig. 6

- Series 353, 362, 363, 373, 382 & 383 single row Header strips come with various styles (pin, slotted head, turret and solder cup) with wrapost tails.

  353...001 uses pin #5301
  362...001 uses pin #1106-2
  363...001 uses pin #1106-3
  373...001 uses pin #0730-3
  382...001 uses pin #8301-2
  383...001 uses pin #8301-3
  See pages 194 & 195 for details.

- Insulators are high temp. thermoplastic.

Ordering Information

Fig. 1	**Series 353...001**	**Pin / 3 Level Wrapost**
	353-XX-1_ _-00-001000	
	Specify # of pins →	01-64
Fig. 2	**Series 362...001**	**Slotted Head / 2 Level Wrapost**
	362-XX-1_ _-00-001000	
	Specify # of pins →	01-64
Fig. 3	**Series 363...001**	**Slotted Head / 3 Level Wrapost**
	363-XX-1_ _-00-001000	
	Specify # of pins →	01-64
Fig. 4	**Series 373..001**	**Turret / 3 Level Wrapost**
	373-XX-1_ _-00-001000	
	Specify # of pins →	01-64
Fig. 5	**Series 382...001**	**Solder Cup / 2 Level Wrapost**
	382-XX-1_ _-00-001000	
	Specify # of pins →	01-64
Fig. 6	**Series 383...001**	**Solder Cup / 3 Level Wrapost**
	383-XX-1_ _-00-001000	
	Specify # of pins →	01-64

For Electrical, Mechanical & Enviromental Data, See pg. 4

XX=Plating Code See Below

For RoHS compliance select ◇ plating code.

SPECIFY PLATING CODE XX=	10◇	90	40◇
Pin Plating	0,25µ Au	5,08µ Sn/Pb	5,08µ Sn

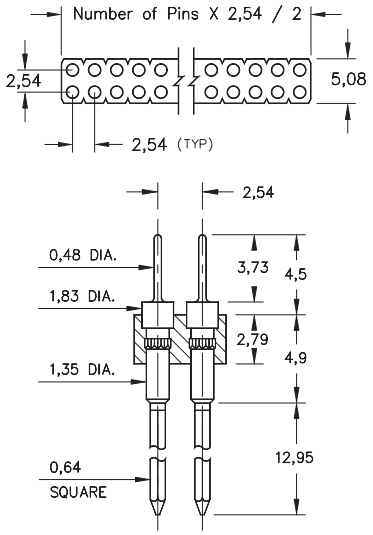

Fig. 1

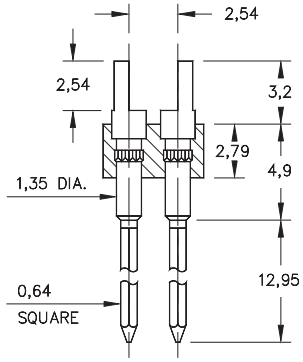

Fig. 2

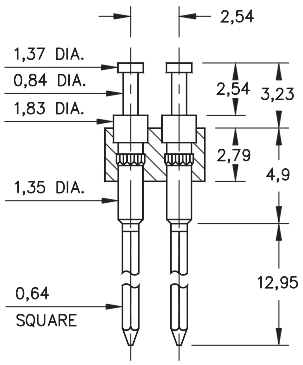

Fig. 3

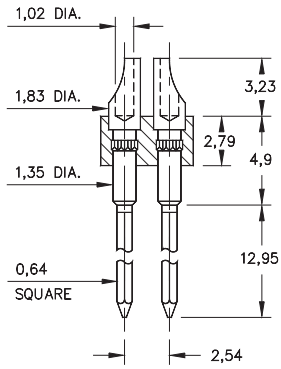

Fig. 4

- Series 453, 463, 473, and 483 double row Header strips come with various styles (pin, slotted head, turret and solder cup) with wrapost tails.

  453...001 uses pin #5301
  463...001 uses pin #1106-3
  473...001 uses pin #0730-3
  483...001 uses pin #8301-3
  See pages 194 & 195 for details.

- Insulators are high temp. thermoplastic.

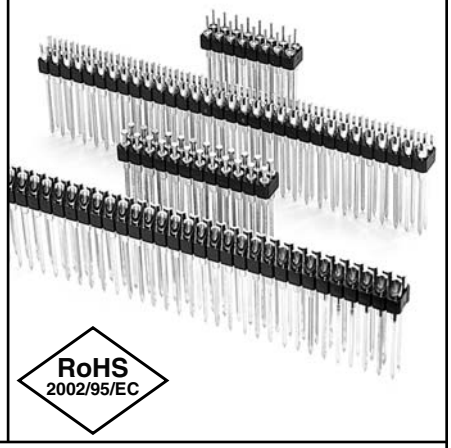

Ordering Information

Fig. 1	**Series 453...001**	**Pin / 3 Level Wrapost**
	453-10-2_ _-00-001000	
	Specify # of pins →	02-64
Fig. 2	**Series 463...001 Slotted Head / 3 Level Wrapost**	
	463-XX-2_ _-00-001000	
	Specify # of pins →	02-64
Fig. 3	**Series 473...001**	**Turret / 3 Level Wrapost**
	473-XX-2_ _-00-001000	
	Specify # of pins →	02-64
Fig. 4	**Series 483...001**	**Solder Cup / 3 Level Wrapost**
	483-XX-2_ _-00-001000	
	Specify # of pins →	02-64

For Electrical, Mechanical & Enviromental Data, See pg. 4

XX=Plating Code See Below

For RoHS compliance select ◇ plating code.

SPECIFY PLATING CODE XX=	10◇	90	40◇	
Pin Plating	0,25µ Au	5,08µ Sn/Pb	5,08µ Sn	

Pin grid array sockets are designed to accept high pin count IC's. They use low force 6-finger contacts to ease insertion/extraction of the device. Standard low force (M-M #32) contact is used for pin counts up to 150, ultra-low force (M-M #35) contact is recommended for 150 pins or more but less than 250 pins. The "ultra lite" (M-M #43) is recommended for 250 pins or more.

CONTACT DETAIL

PGA sockets all have precision-machined pins, this offers the lowest possible profile. The closed bottom design also eliminates flux and solder contamination, and the pins are in-line with contact entry.

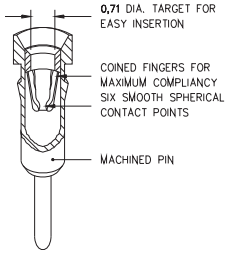

Insulator bodies are molded from high temp. PCT polyester suitable for all forms of soldering including wave, infra-red reflow and vapor phase.

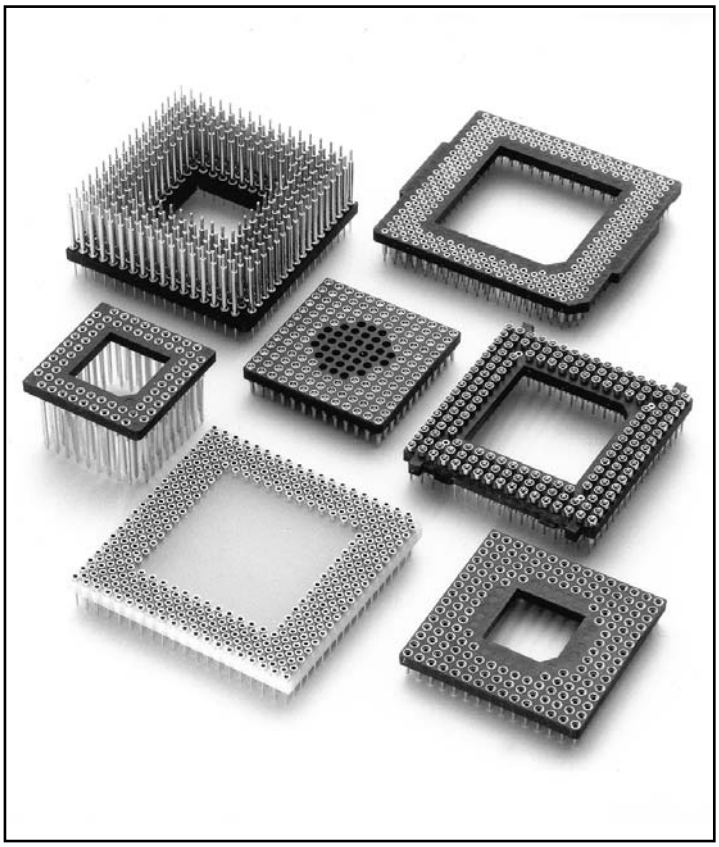

TECHNICAL SPECIFICATIONS

Materials

Insulator body:

High Temp. glass-filled thermoplastic polyester (PCT)

Heat deflection temperature (HDT @ 264 PSI) = 255°C(490°F)

Self-extinguishing, rated UL94V-0

Receptacle (Sleeve):

Screw machined brass (ASTM-B16-00), plated 0,25µm gold, 5,08µm tin or 5,08µm tin-lead (SnPb 90/10) over 2,54µm nickel.

Pin:

Screw machined brass (ASTM-B16-00), plated 0,25µm gold, 5,08µm tin or 5,08µm tin-lead (SnPb 90/10) over 2,54µm nickel.

Contact (clip):

Stamped beryllium-copper (ASTM-B194-01), plated 0,25µm or 0,76µm gold over 1,27µm nickel.

Mechanical Data

-Insertion characteristics:

Measured with a polished steel gauge 0,46 diameter

Low force M-M#32 (01 suffix) typ. insertion force 50 grams
typ. extraction force 30 grams

Ultra-low force M-M#35 (02 suffix) typ. insertion force 25 grams
typ. extraction force 15 grams

"Ultra lite" M-M#43 (03 suffix) typ. insertion force 12.5 grams
typ. extraction force 7.5 grams

-Mechanical life: 100 cycles min.

Electrical & Environmental Data

-See general specifications on page 4.

DIMENSIONS OF PGA SOCKET INSULATORS

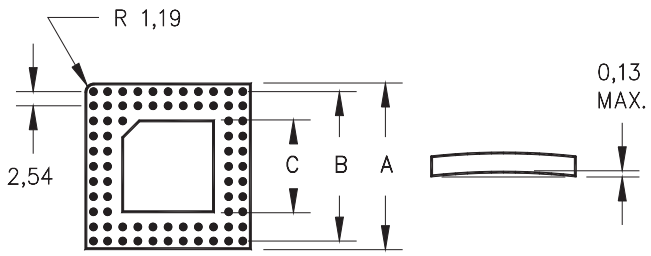

DIMENSIONS **A**, **B**, and **C** can be calculated as follows:

N1 = GRID SIZE (# of pins per side, outer most row only for interstitial patterns)

N2 = WINDOW SIZE

A = N1 X 2,54

B = (N1-1) X 2,54

C = (N2 X 2,54) - 0,41

TECHNICAL SPECIFICATIONS FOR 540 SERIES PLCC SOCKETS

MATERIALS:
- Insulator: Glass filled thermoplastic, self-extinguishing rated, UL94V-0, color black.
- Contact: Plated copper alloy overall nickel underplating, tin finish.

MECHANICAL DATA:
- Contact pressure (per contact): 150 grams min.
- Mechanical data (cycles): 50 cycles min.

ELECTRICAL DATA:
- Rated current: SMD types: 1A
  Thru-hole types: 2A
- Contact resistance: 20 mΩ max.
- Insulation resistance: 5,000 MΩ min.
- Dielectric strength: 600 VRMS
- Capacitance: 2pF max.

ENVIRONMENTAL DATA:
- Operating temperature: -55/+125 °C
- Vibration (No electrical discontinuity greater than 1µs): 10-2000 HZ, 15 g
- Climactic category (EIA): 365-17A

TECHNICAL SPECIFICATIONS FOR 940 SERIES PLCC SOCKETS

MATERIALS:
- Insulator: PPS Polyphenylene Sulfide,Rated UL94V-0.
- Contact: Phosphor Bronze with a tin finish and nickel underplate.

MECHANICAL DATA:
- Contact pressure (per contact): 150 grams min.
- Mechanical data (cycles): 25 cycles min.

ELECTRICAL DATA:
- Rated current: SMD types: 1A
  Thru-hole types: 1A
- Contact resistance: 30 mΩ max.
- Insulation resistance: 10,000 MΩ min.
- Dielectric strength: 600 VAC
- Capacitance: 1pF max.

ENVIRONMENTAL DATA:
- Operating temperature: -55/+105 °C
- Vibration (No electrical discontinuity greater than 1µs): 10-2000 HZ, 15 g
- Climactic category (EIA): 365-17A

TECHNICAL SPECIFICATIONS FOR BGA ADAPTER SYSTEM

Materials:
- Socket contact: Three finger, stamped beryllium copper alloy 172, HT (Mill-Max type #04 or #05); plated 0,25µm gold over 1,27µm nickel.
- Socket shell and adapter pins: Precision machined brass alloy; plated 0,25µm gold over 2,54µm nickel.
- Insulator material: 1,19 or 1,57 thick glass-epoxy type FR-4, rated UL94V-0. TCE = 10-13ppm/°C, $\varepsilon_r = 5.0$

Mechanical:
- Insertion and withdrawal forces (using 0,25 dia. polished steel gage pin): Insertion: .36N typ. per pin
  Withdrawal: .20N typ. per pin
- Insertion force of an actual 225 pin device: 90N
- Durability: 100 cycles
- Coplanarity: ≤0,13

Electrical:
- Current rating (per pin): 1 A
- Working voltage: 100 VRMS/150 VDC max.
- Low level contact resistance: 10 mΩ max.
- Insulation resistance @ 500 VRMS:
  Initial value: 1,000,000 MΩ min.
  After climatic tests: 10,000 MΩ min.
- Dielectric withstanding voltage: 500 VRMS
- Capacitance between adjacent contacts: 1 pF max.
- Self inductance per pin: 2 nH max.
- Electrical length: 31 pS

Environmental:
- Operating temperature range: -55 °C to +125 °C

BGA adapter/socket systems have withstood the following environmental tests without mechanical or electrical failure:
- Damp heat, steady state: 40 °C, 93% rH, 21 days
- Damp heat, cyclic: 25/55 °C, 6 days
- Dry heat: 100°C, 1,000 hours
- Thermal shock: -55 to +125 °C, 5 cycles
- Random vibration: 50 to 500 Hz, 8g, 20 min. per axis
- Shock: 50 g per axis
- Solderability: 235 °C, 2 seconds
- Resistance to soldering heat: 270 °C, 10 seconds
- Resistance to corrosion:

Salt spray: 48 hours
Sulphur dioxide: 96 hours @ 25 ppm SO_2, 25 °C, 75% rH
Hydrogen sulphide: 96 hours @ 12 ppm H_2S, 25°C, 75% rH

- Series 510, 511, 514, 515, 522 & 523 PGA sockets are available on 2,54 centers.
- Series 513 and 518 PGA sockets are available for Interstitial patterns.
- Choice of three low force clips to cover all applications.
- Hi-Temp PCT polyester insulator material suitable for all forms of soldering.

For RoHS compliance select ◇ plating code.

For Electrical, Mechanical & Enviromental Data, See pg. 112

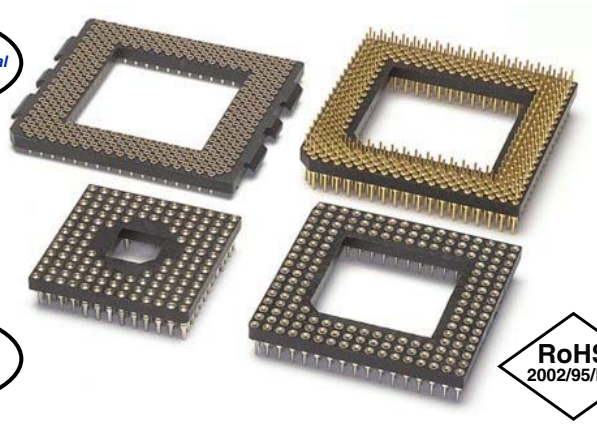

XX=Plating Code See Below

RoHS 2002/95/EC

STANDARD SOLDER TAIL SERIES 510

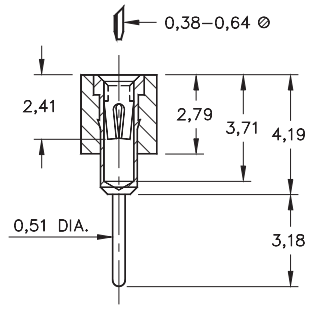

LONG SOLDER TAIL SERIES 511

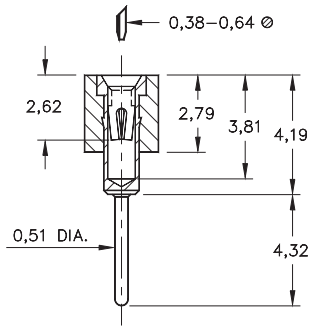

SMT RECEPTACLE SERIES 513

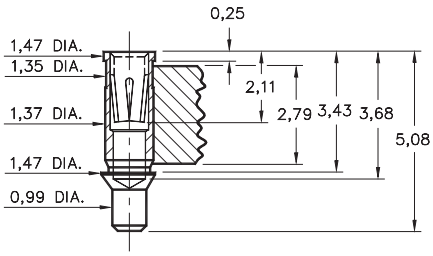

Interstitial Patterns Only

SMT RECEPTACLE SERIES 514

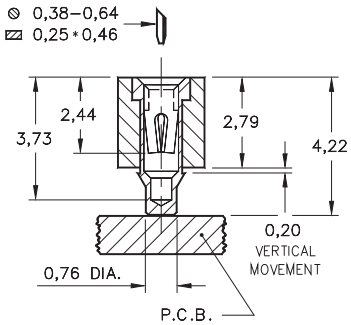

LOW PROFILE SOLDER TAIL SERIES 515

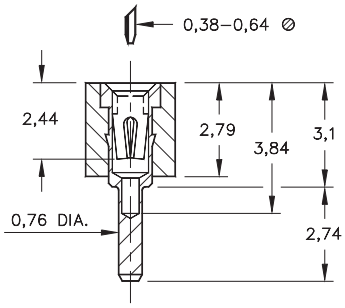

SOLDER TAIL (Without Heatsink Tabs) SERIES 518

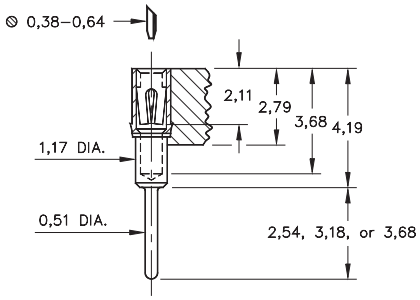

Interstitial Patterns Only

SOLDER TAIL (With Heatsink Tabs) SERIES 518

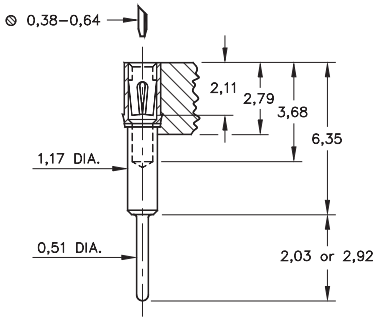

Interstitial Patterns Only

2 LEVEL WRAPOST SERIES 522

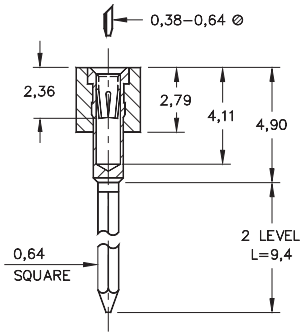

3 LEVEL WRAPOST SERIES 523

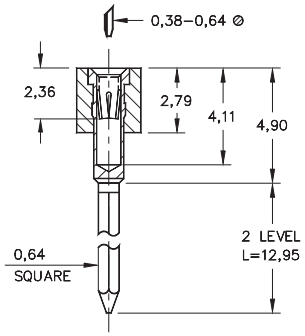

Visit www.mill-max.com/pga To configure a formal Part Number

SPECIFY PLATING CODE XX=	13◇		93			43◇	
Sleeve (Pin)	0,25µm Au		5,08µm Sn/Pb			5,08µm Sn	
Contact (Clip)	0,76µm Au		0,76µm Au			0,76µm Au	

- Series 551 and 599 headers are available on 2,54 centers.

  Series 507 & 550 PGA sockets are available for Interstitial patterns.

- Hi-Temp PCT polyester insulator material suitable for all forms of soldering.

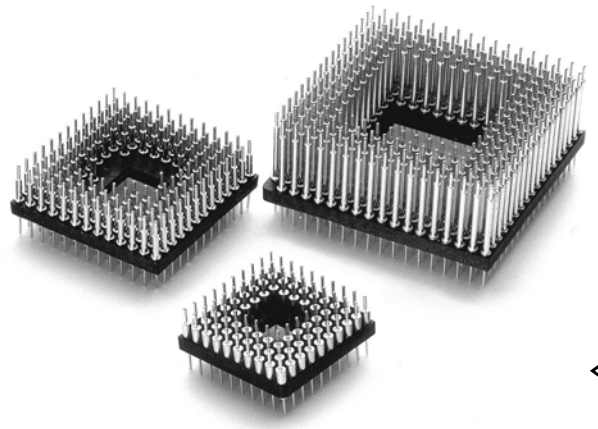

RoHS 2002/95/EC

SMT HEADER PIN TYPE 0737
SERIES 507

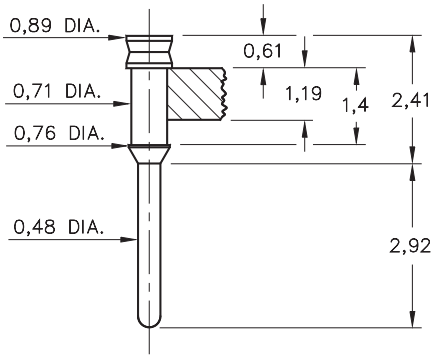

Interstitial Patterns Only

HEADER PIN TYPE 5012
SERIES 550

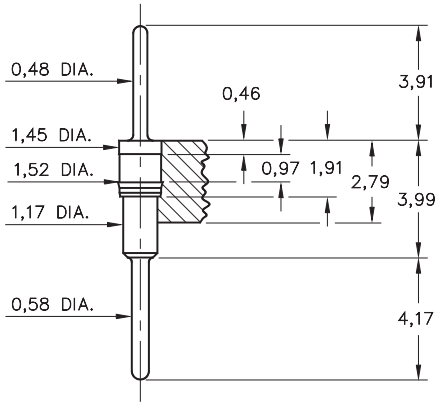

Interstitial Patterns Only

HEADER PIN TYPE 5503
SERIES 551

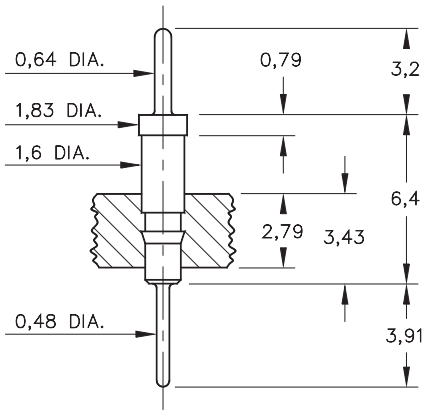

HEADER PIN TYPE 5504 & 5505
SERIES 551

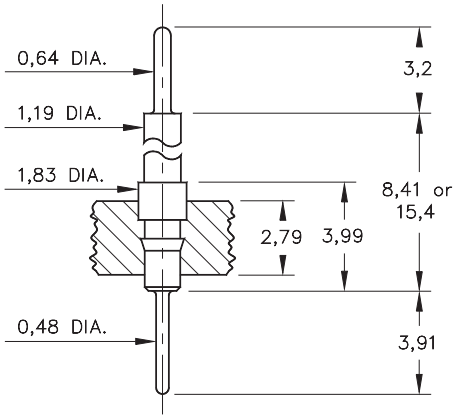

SMT HEADER PIN TYPE 9976
SERIES 599

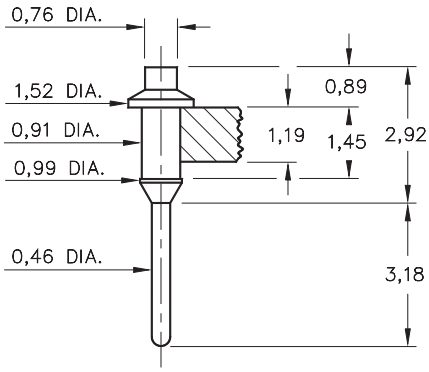

For Electrical, Mechanical & Enviromental Data, See pg. 112

XX=Plating Code See Below

For RoHS compliance select ◇ plating code.

Visit www.mill-max.com/pga To configure a formal Part Number

SPECIFY PLATING CODE XX=	10◇	90	40◇
Pin Plating	0,25µ Au	5,08µ Sn/Pb	5,08µ Sn

- Series 614 & 605 PGA carrier sockets offer 4 receptacle styles.
- Many combinations of receptacles and clips to cover all applications.
- Hi-Temp PCT polyester insulator material suitable for all forms of soldering.
- Carrier sockets provide a convenient way of loading groups of receptacles onto a PC board.

APPLICATION OF PGA SOCKET CARRIERS

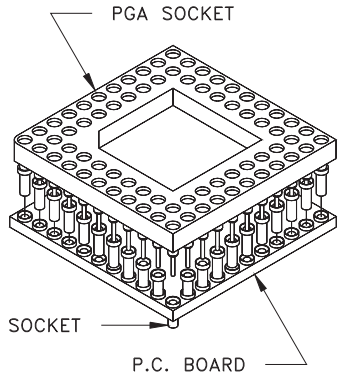

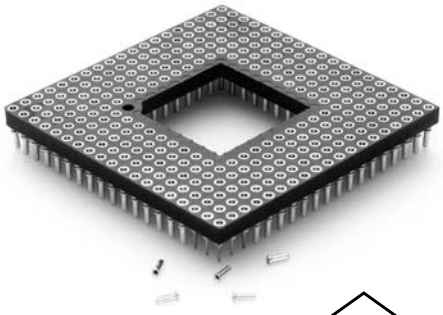

RoHS 2002/95/EC

LOW PROFILE SOCKET SERIES 614...001, 002, 003

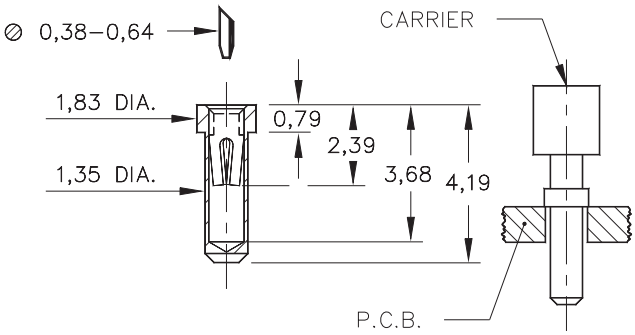

For 2,54 Grid Only

MINIATURE SOCKET SERIES 614...007

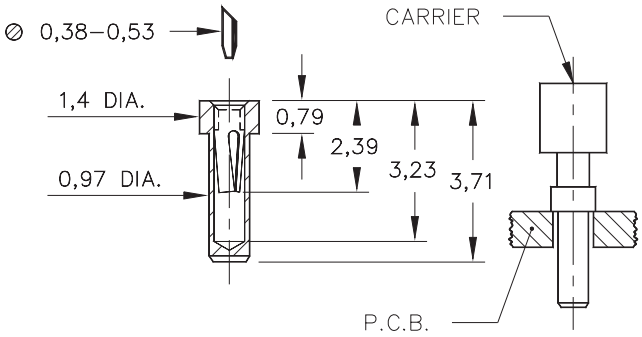

LOWEST PROFILE SOCKET SERIES 614...012

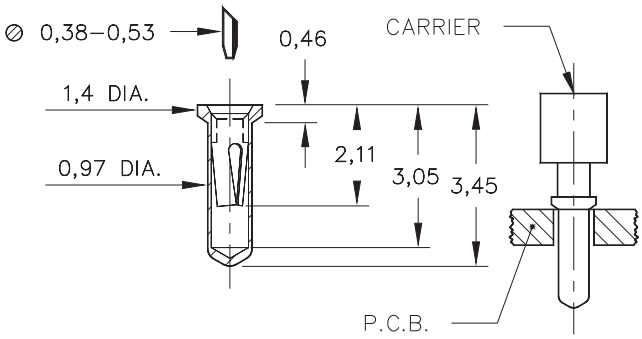

REDUCED BARREL SOCKET SERIES 605...048

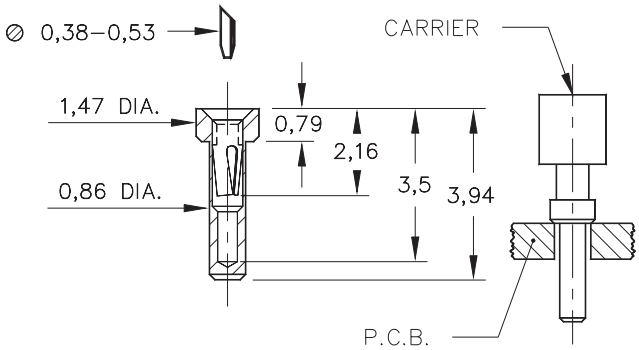

For Electrical, Mechanical & Enviromental Data, See pg. 112

XX=Plating Code See Below

For RoHS compliance select ◇ plating code.

Visit www.mill-max.com/pgacarrier To configure a formal Part Number

SPECIFY PLATING CODE XX=	13◇		93			43◇	
Sleeve (Pin)	0,25µm Au		5,08µm Sn/Pb			5,08µm Sn	
Contact (Clip)	0,76µm Au		0,76µm Au			0,76µm Au	

BALL GRID ARRAYS Series 540, 579, 582, 587, 599
For 0,8mm Grid, 1mm Grid and 1,27 Grid
Male Pin Adapters & Female Sockets

- BGA adapter/socket systems are a reliable way to make BGAs pluggable. They may also be used as a high density board-to-board interconnect.
- The BGA device for a 0,8mm or 1mm grid is soldered to a 9929 adapter (or a 7929 adapter is soldered to a PCB), then either one can be plugged into a 9942 (0.8mm grid) or 9928 (1mm grid) surface mount socket.
- The BGA device for a 1,27 grid is soldered to a 8737/4048 adapter (or a 4098/4054 adapter is soldered to a PCB), then either one can be plugged into a 8214 surface mount socket.
- Both socket and adapter have the same footprint as the BGA device.
- Insertion force is .4N per pin for standard pins 7929/9929, 8737/4098. Tapered EZ-IN pins 4048/4054 reduce insertion force to only .08N, and are recommended for pin counts greater than 500.
- Insulator material is FR-4 epoxy having a TCE to match the BGA device and circuit board.

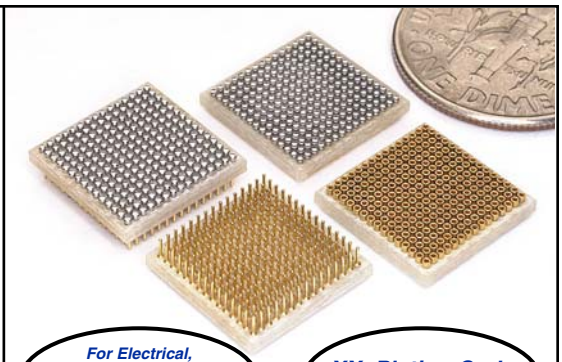

For Electrical, Mechanical & Enviromental Data, See pg. 113

XX=Plating Code See Below

BGA MOUNT TYPE 9929 SERIES 599...429

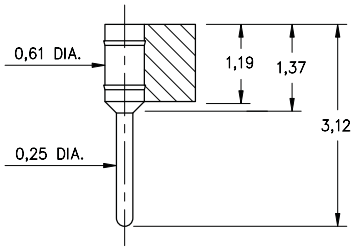

For 0,8mm & 1mm Grid Only

PCB MOUNT TYPE 7929 SERIES 579...429

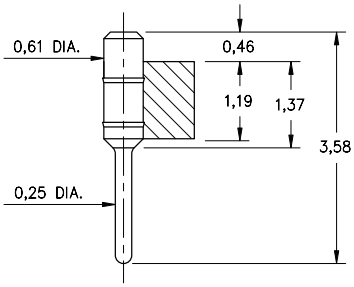

For 0,8mm & 1mm Grid Only

BGA MOUNT TYPE 8737 SERIES 587...437

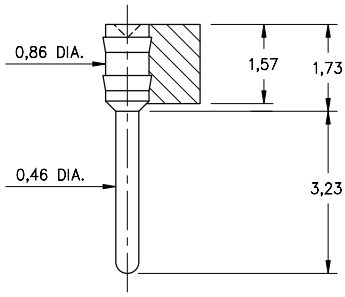

For 1,27 Grid Only

EZ-IN BGA MOUNT TYPE 4048 SERIES 540...448

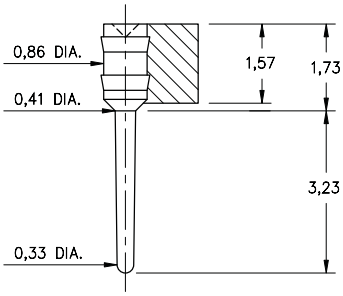

For 1,27 Grid Only

STANDARD PCB MOUNT TYPE 4098 SERIES 540...498

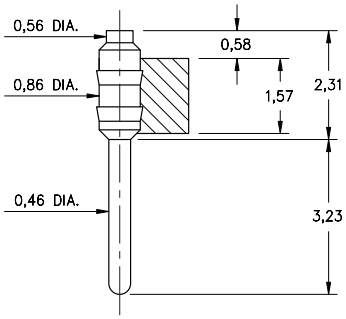

For 1,27 Grid Only

EZ-IN PCB MOUNT TYPE 4054 SERIES 540...454

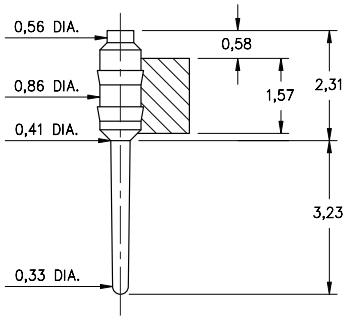

For 1,27 Grid Only

SURFACE MOUNT TYPE 9942 SERIES 599...442

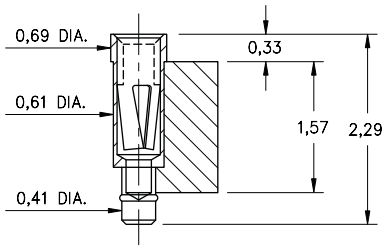

For 0,8mm Grid Only

SURFACE MOUNT TYPE 9928 SERIES 599...428

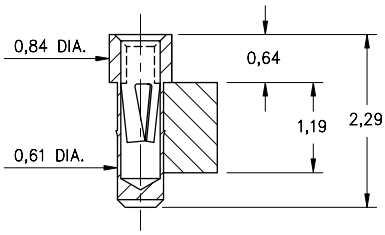

For 1mm Grid Only

SURFACE MOUNT TYPE 8214 SERIES 582...414

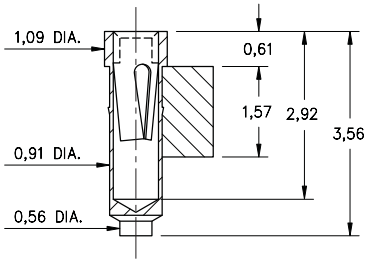

For 1,27 Grid Only

Visit www.mill-max.com/bga To configure a formal Part Number

SPECIFY PLATING CODE XX=	11◇	PLATING CODE XX=	10◇
Sleeve (Receptacle)	0,25µm Au	Pin Plating	0,25µm Au
Contact (Internal Clip)	0,25µm Au		

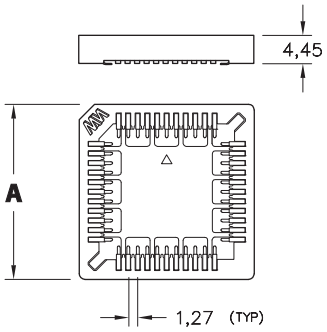

- Note: Not end stackable.
- Accepts JEDEC PLCCs MO-047 and MO-052.
- Low profile for high density PC board stacking.
- Standoffs provide clearance for heat dissipation and cleaning.
- Contacts are plated with 3,81µm tin.
- Insulator material is glass reinforced PPS.

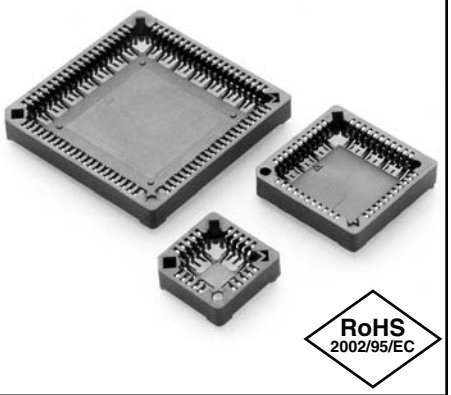

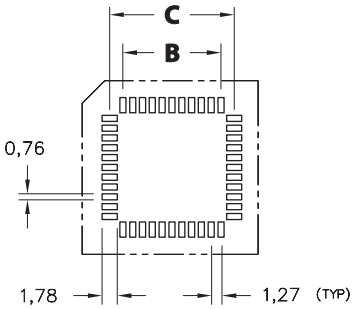

For Electrical, Mechanical & Enviromental Data, See pg. 113

PCB LAYOUT FOR SURFACE MOUNT

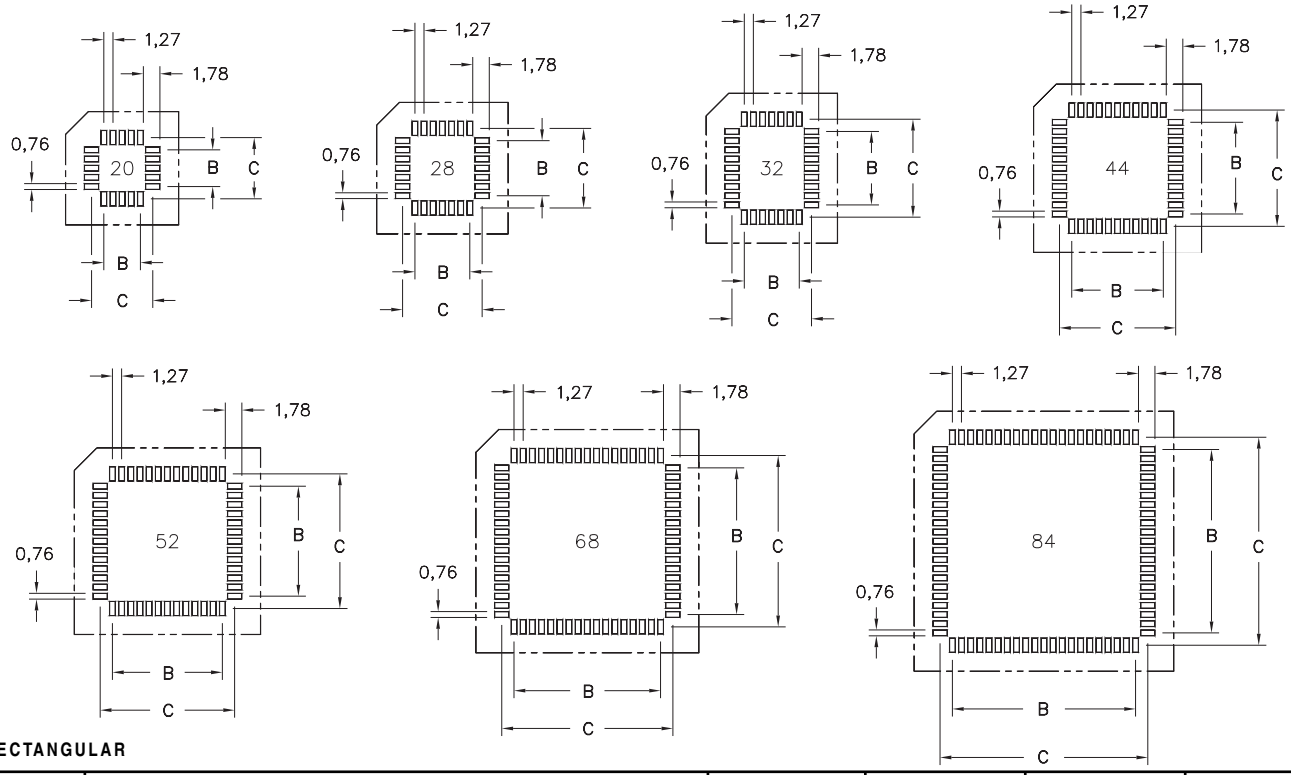

* RECTANGULAR

No. of Contacts	Ordering Information	- A -	- B -	- C -	Qty. per Tube	Qty. per Reel
20	940-44-020-17-40000X	15,57	5,08	8,48	32	470
28	940-44-028-17-40000X	18,11	7,62	11,02	27	390
32*	940-44-032-17-40000X*	20,6 / 18,1	10,2 / 7,62	13,6 / 11,0	24	390
44	940-44-044-17-40000X	22,86	12,7	16,10	21	250
52	940-44-052-17-40000X	25,73	15,24	18,64	19	250
68	940-44-068-17-40000X	30,81	20,32	23,72	16	220
84	940-44-084-17-40000X	35,89	25,4	28,80	14	200

Packaging Codes: X = 0 (Tubes) / X = 4 (Tape & Reel)

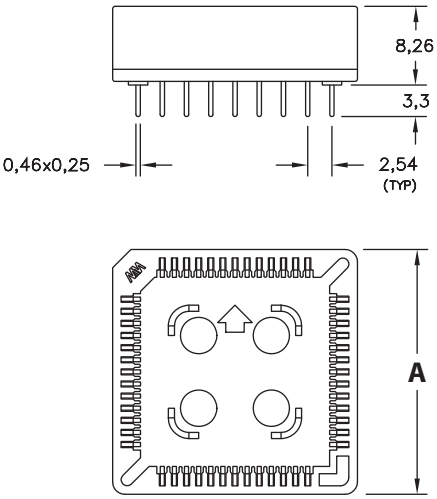

- Note: Not end stackable.
- Accepts JEDEC PLCCs MS-016 & MS-018 leaded plastic substrates.
- Internal standoffs insure proper positioning of chip carrier in socket.
- Standoffs provide clearance for heat dissipation and cleaning.
- Contacts are plated with 3,81µm tin.
- Insulator material is glass reinforced PPS.

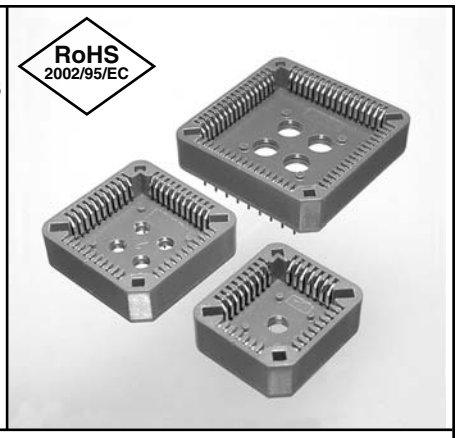

PRINTED CIRCUIT DRILLING PATTERNS
(TOP VIEW)
0,89 dia. min. mounting holes

For Electrical, Mechanical & Enviromental Data, See pg. 113

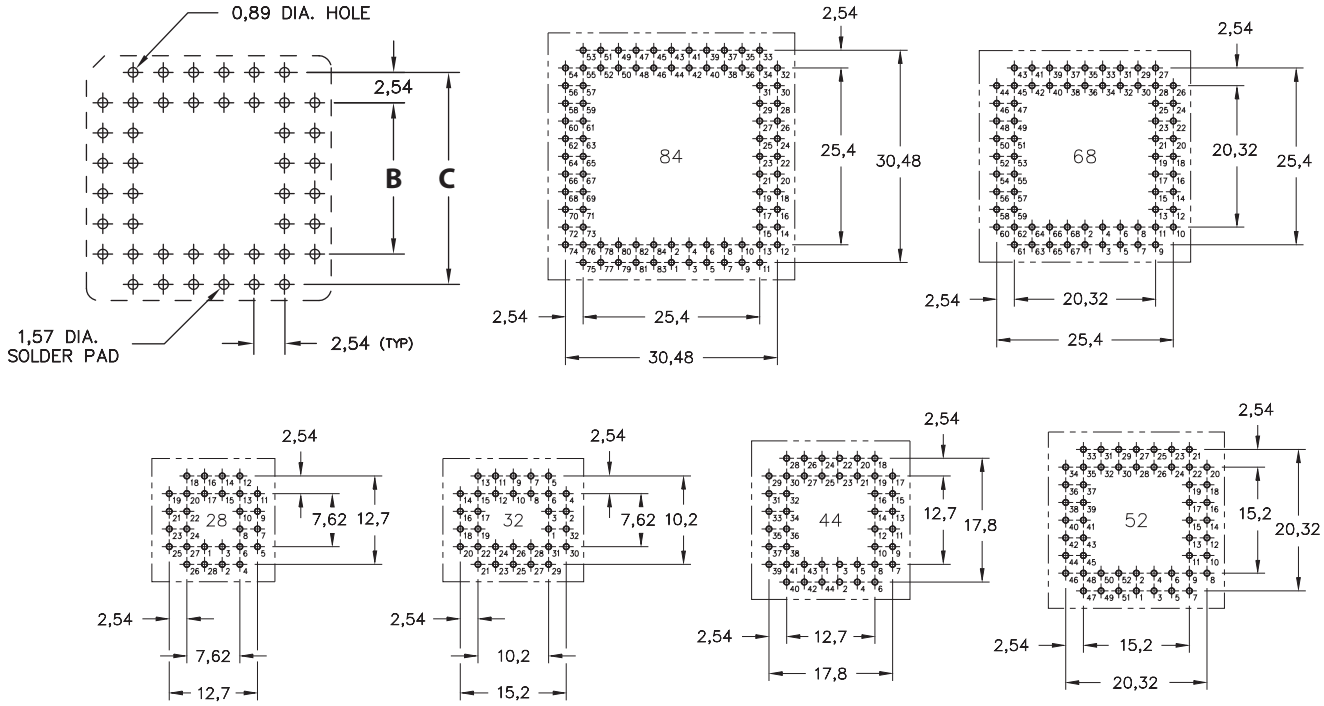

No. of Contacts	Ordering Information	- A -	- B -	- C -	Quantity per Tube
20	940-44-020-24-000000	15,57	5,08	10,16	38
28	940-44-028-24-000000	18,11	7,62	12,7	33
32*	940-44-032-24-000000*	20,7 / 18,1	10,2 / 7,62	15,2 / 12,7	29
44	940-44-044-24-000000	23,19	12,7	17,8	26
52	940-44-052-24-000000	25,73	15,24	20,32	23
68	940-44-068-24-000000	30,81	20,32	25,4	19
84	940-44-084-24-000000	35,89	25,4	30,48	16
100	940-44-100-24-000000	40,72	30,48	35,56	25
	Plating Code 44 ◇ = 3,81µm Sn *RECTANGULAR				

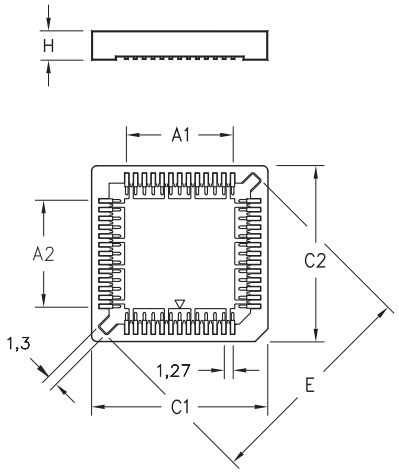

- Note: End stackable.
- Designed for JEDEC type devices.
- Open frame design in solder area improves results of IR soldering and facilitates visual inspection of solder pads.
- Contacts are plated with 3,81µm tin.
- The insulator is molded PPS (Ryton R-4).

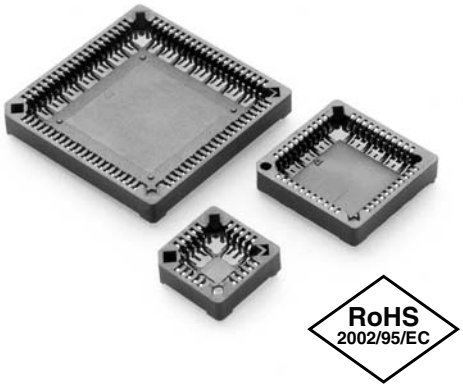

For Electrical, Mechanical & Enviromental Data, See pg. 113

PCB LAYOUT FOR SURFACE MOUNT

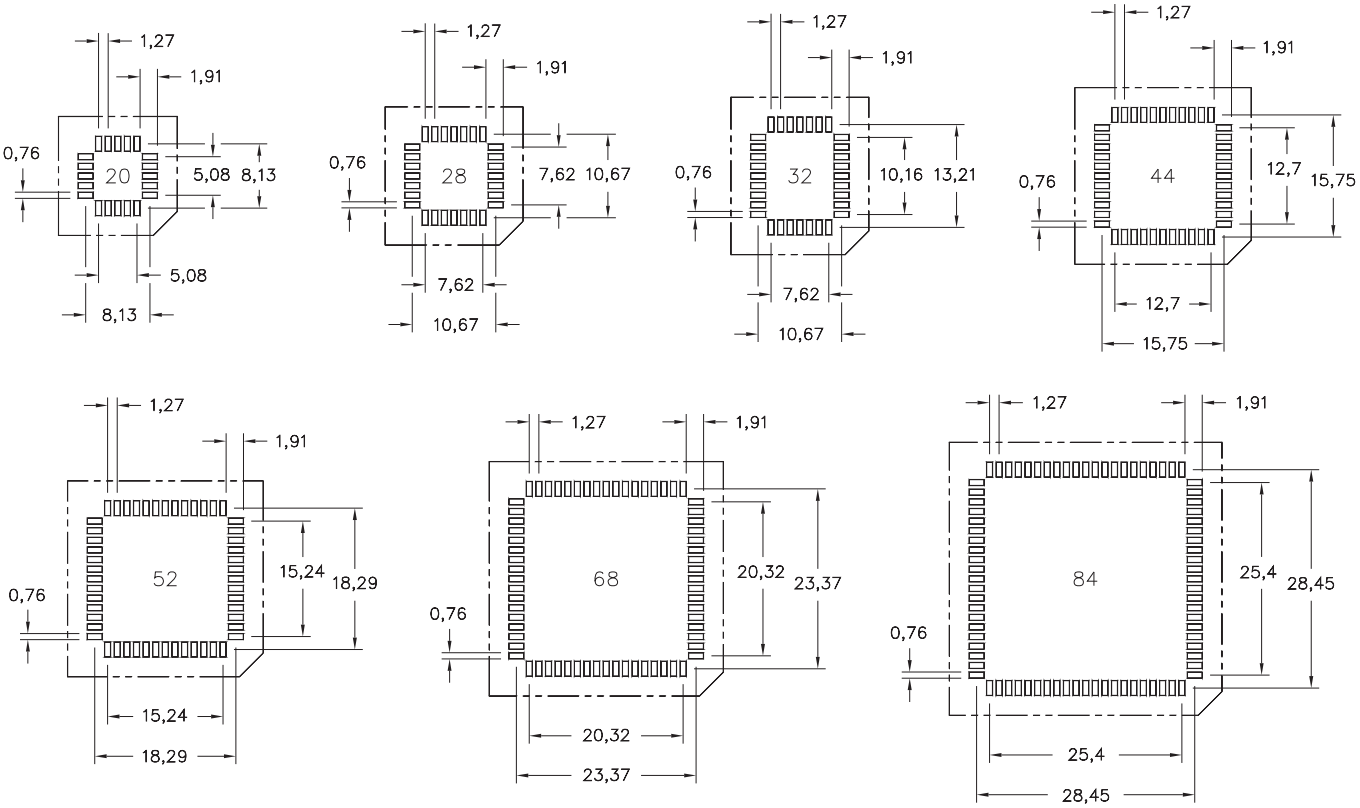

* RECTANGULAR

No. of Contacts	Ordering Information	- A1 -	- A2 -	- C1 -	- C2 -	- E -	- H -	Qty. per Tube	Tape Width mm	Qty. per Reel
20	540-44-020-17-40000X	5,08	5,08	14,86	14,86	16,69	4,57	34	24	490
28	540-44-028-17-40000X	7,62	7,62	17,4	17,4	20,29	4,57	29	32	400
32*	540-44-032-17-40000X*	7,62	10,16	17,02	19,56	22,48	3,76	26	32	400
44	540-44-044-17-40000X	12,7	12,7	22,48	22,48	27,48	4,57	22	44	250
52	540-44-052-17-40000X	15,24	15,24	25,4	25,4	31,09	4,57	20	44	250
68	540-44-068-17-40000X	20,32	20,32	30,53	30,53	38,28	4,57	16	44	220
84	540-44-084-17-40000X	25,4	25,4	35,56	35,56	45,49	4,57	14	56	200
	Packaging Codes: X = 0 (Tubes) X = 4 (Tape & Reel)									

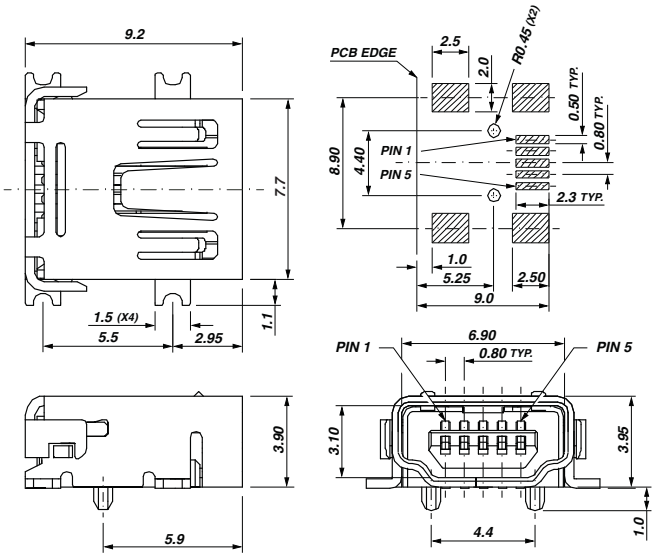

Fig. 1

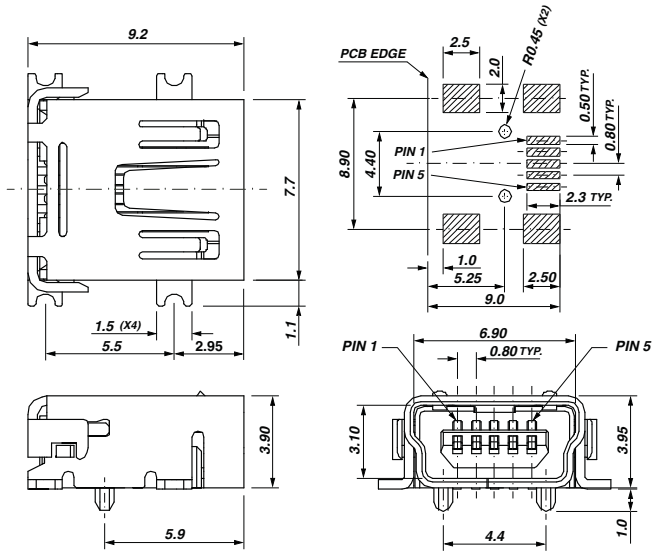

Fig. 2

RoHS
2002/95/EC

Features

- Mini USB receptacles for surface mount.
- 5 Pin (one ID Pin), 0.8mm pitch, mini USB connector.
- Reduced mounting space.
- Fully Shielded.
- Fully compliant with current USB 2.0 specifications.
- Smaller and lighter than existing USB connectors for portable and handheld devices.
- Packaged on Tape & Reel - 700 parts per reel.

Ordering Information:

Figure 1: Mini Type A Recep., Single,Surface Mount

896-43-005-00-100001

Figure 2: Mini Type B Recep., Single,Surface Mount

897-43-005-00-100001

Specifications

Materials:
Terminals: Copper Alloy, Tin Plated
Contacts: Copper Alloy, 0,76µm Gold Plated
Casing & Shield: Stainless Steel
Insulator material: High temp. thermoplastic rated UL94V-0

Ratings:
Voltage: 30VAC (rms)
Current: 1A max. per contact for 30°C temperature rise
All housing materials rated for "lead-free" soldering up to 260ºC

Electrical:
Contact resistance: 50mΩ max.
Insulation resistance: 100MΩ min.
Dielectric withstanding voltage: 100VAC at sea level
Capacitance: 2pF max.

Mechanical:
Random vibration: No discontinuity >1µs per EIA 364-28, cond. V, letter A
Physical shock: No discontinuity >1µs per EIA 364-27, condition H
Durability: 5000 cycles min. per EIA 364-09
Mating force: 35 Newtons max. per EIA 364-13
Unmating force: Initial - 7 Newtons min. per EIA 364-13
After test - 3 Newtons min. per EIA 364-13
Cable Pull-out force per EIA 364-38

Environmental:
Thermal shock per EIA 364-32, condition I
Humidity per EIA 364-31, method III, condition A
Temperature life per EIA 364-17, condition 3, method A
Solderability per EIA 364-52, category 2

Applications:

- **Cell phones**
- **Digital still cameras**
- **Digital video cameras**
- **PDAs**
- **MP3 Players**
- **Other portable and hand-held devices**

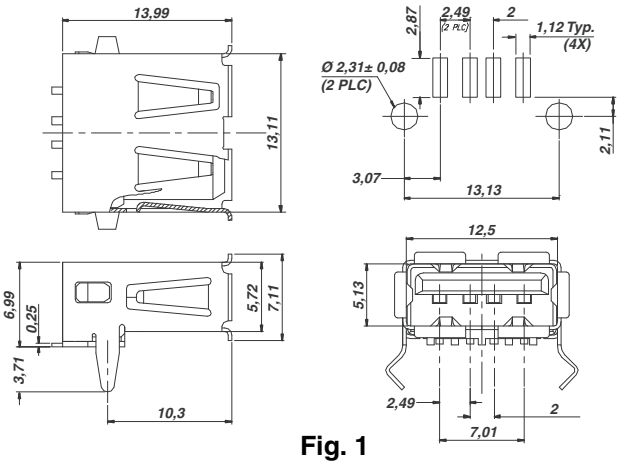

Fig. 1

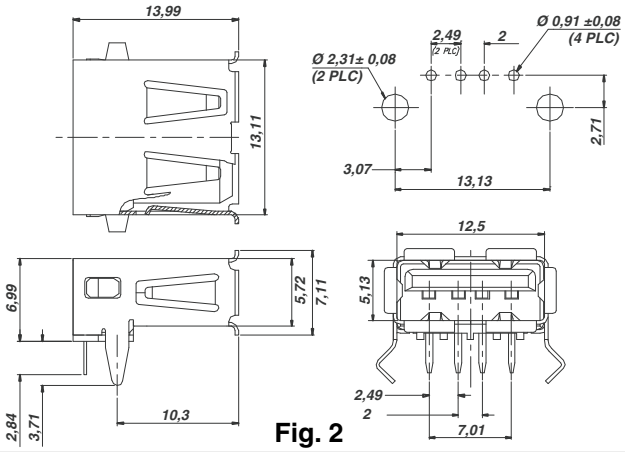

Fig. 2

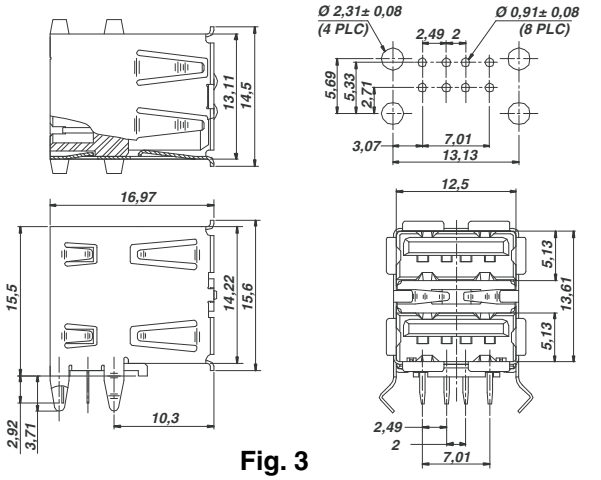

Fig. 3

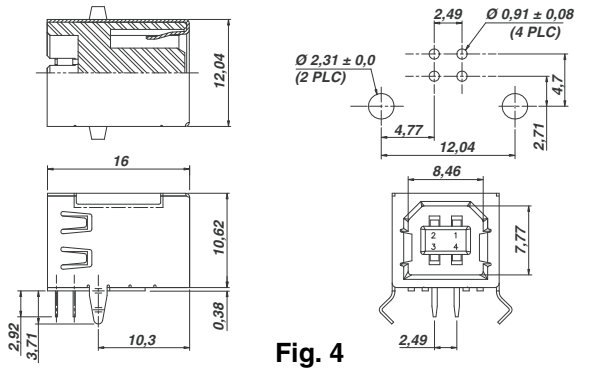

Fig. 4

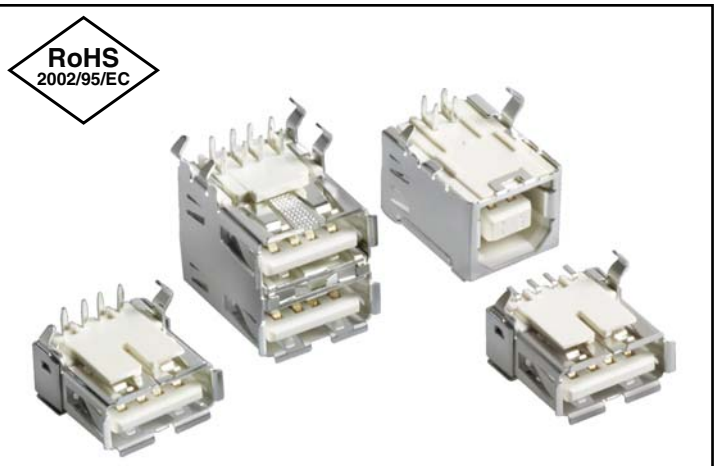

Features

- USB receptacles for through-hole & surface mount.
- Plug retention tabs.
- Kinked locating legs for secure PCB retention.
- Fully Shielded.
- Fully compatible with USB 1.0 & 2.0 specifications.
- Passes 16MHz Signal Attentuation per ASTM-D-4566.
- Packaged in trays, 150 pieces per tray.

Ordering Information

Figure 1: Type A Receptacle, Single, Surface Mount
896-43-004-00-000000

Figure 2: Type A Receptacle, Single, Through Hole
896-43-004-90-000000

Figure 3: Type A Receptacle, Double, Through Hole
896-43-008-90-000000

Figure 4: Type B Receptacle, Single,Through Hole
897-43-004-90-000000

Specifications

Materials:
Terminals: Copper Alloy, Tin Plated
Contacts: Copper Alloy, 0,76µm Gold Plated
Casing & Shield: Stainless Steel
Insulator material: High temp. thermoplastic rated UL94V-0

Ratings:
Voltage: 30VAC (rms)
Current: 1A max. per contact for 30°C temperature rise
All housing materials rated for “lead-free” soldering up to 260ºC

Electrical:
Contact resistance: 30mΩ max.
Insulation resistance: 1000MΩ min.
Dielectric withstanding voltage: 750VAC at sea level
Capacitance: 2pF max.

Mechanical:
Random vibration: No discontinuity >1µs per EIA 364-28, cond. V, letter A
Physical shock: No discontinuity >1µs per EIA 364-27, condition H
Durability: 1500 cycles min. per EIA 364-09
Mating force: 35 Newtons max. per EIA 364-13
Unmating force: 10 Newtons min. per EIA 364-13

Environmental:
Thermal shock per EIA 364-32, condition I
Humidity per EIA 364-31, method II, condition A
Temperature life per EIA 364-17, condition 3, method A

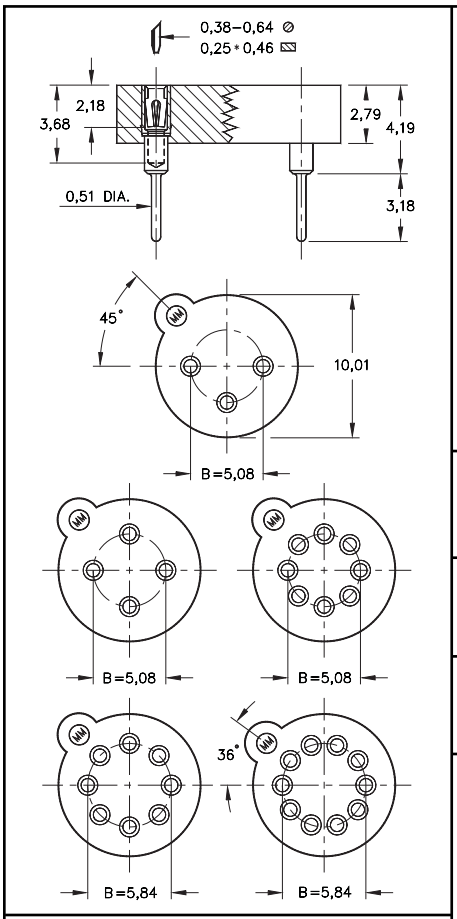

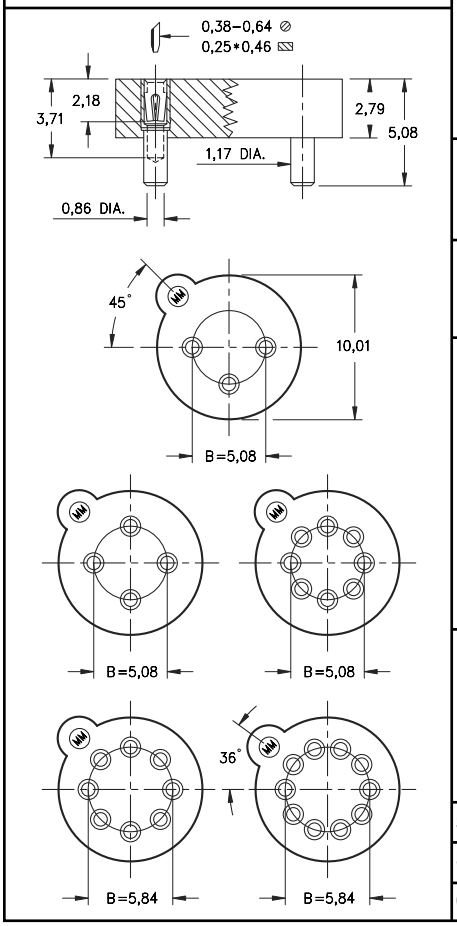

- Series 917 TO package sockets are available in 3, 4, 8 and 10 positions.
- Two 8 pin versions feature pin centers on 5,08 or 5,84 circle.
- Series 917_005 use MM #1802 pins, see page 140 for details. Receptacles use Hi-Rel, 4 finger #30 contact rated at 3 amps. See page 218 for details.
- Series 917_001 use MM #1701 pins, see page 140 for details. Receptacles use Hi-Rel, 4 finger #30 contact rated at 3 amps. See page 218 for details.
- Insulators are high temp. thermoplastic.

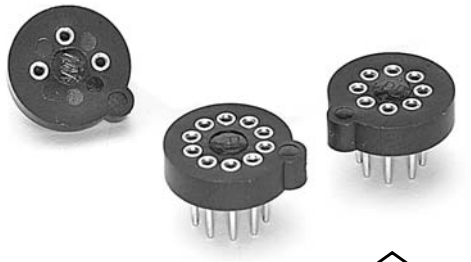

RoHS 2002/95/EC

Ordering Information

Transistor Sockets (Through-Hole Mount)

Type	Circle Dia.	No. of Pins	Ordering Information
TO-5	5,08	3	917-XX-103-41-005000
TO-5	5,08	4	917-XX-104-41-005000
TO-5	5,08	8	917-XX-108-41-005000
TO-100	5,84	8	917-XX-208-41-005000
TO-100	5,84	10	917-XX-210-41-005000

Transistor Sockets (Surface Mount)

Type	Circle Dia.	No. of Pins	Ordering Information
TO-5	5,08	3	917-43-103-41-001000
TO-5	5,08	4	917-43-104-41-001000
TO-5	5,08	8	917-43-108-41-001000
TO-100	5,84	8	917-43-208-41-001000
TO-100	5,84	10	917-43-210-41-001000

For Electrical, Mechanical & Enviromental Data, See pg. 4

XX=Plating Code See Below

For RoHS compliance select ◇ plating code.

SPECIFY PLATING CODE XX=			93			43◇	
Sleeve (Pin)			5,08µm Sn/Pb			5,08µm Sn	
Contact (Clip)			0,76µm Au			0,76µm Au	

MISCELLANEOUS SOCKETS
Right Angle Socket
Test Point

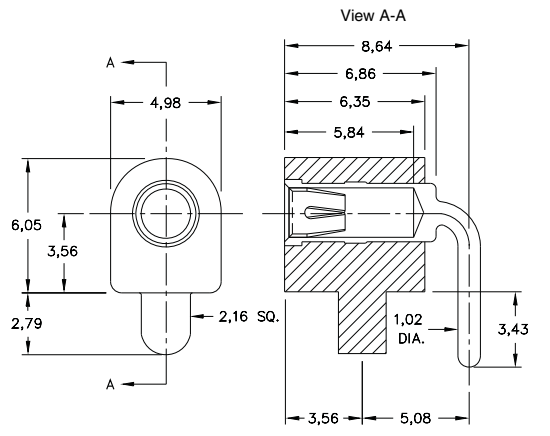

- Available to accept 3 pin sizes: 1, 1.5, & 2mm.
- Uses Hi-Temp PCT polyester insulator.
- Standard Insulator color is black.

RoHS 2002/95/EC

Pin Size	Ordering Information
1.0mm	395-XX-101-34-34X000
1.5mm	395-XX-101-03-38X000
2.0mm	395-XX-101-07-35X000

Insulator Color Options
X= 0 - Black

RECOMMENDED MOUNTING HOLES

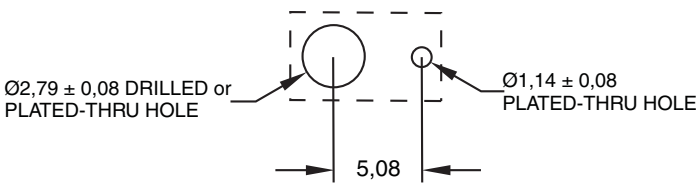

For Electrical, Mechanical & Enviromental Data, See pg. 4

XX=Plating Code See Below

For RoHS compliance select ◇ plating code.

SPECIFY PLATING CODE XX=	13◇		93				
Sleeve (Pin)	0,25µm Au		5,08µm Sn/Pb				
Contact (Clip)	0,76µm Au		0,76µm Au				

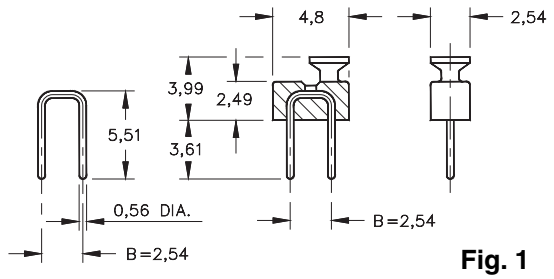

Fig. 1

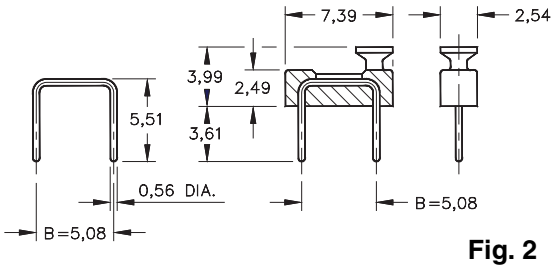

Fig. 2

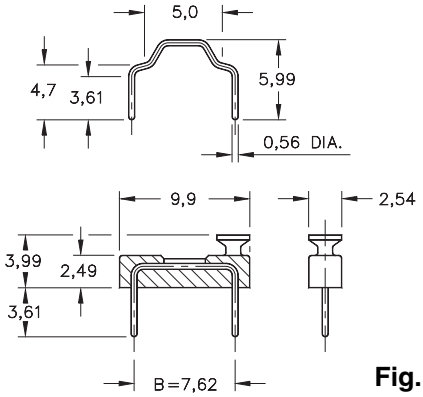

Fig. 3

- Male shorting jumpers are available with or without insulator and have 0,56 diameter pins with 2,54, 5,08 or 7,62mm center spacing.
- Insulator materials are not high temperature.

For Electrical, Mechanical & Enviromental Data, See pg. 4

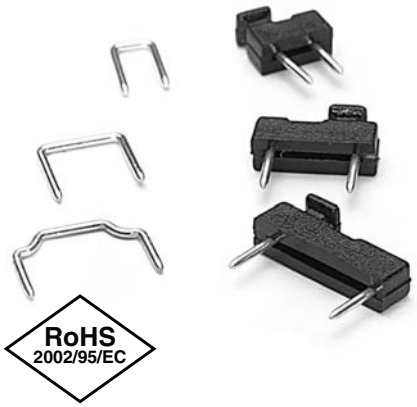

Ordering Information

	Male Shorting Jumper 2,54 Spacing	
Fig. 1	**Color / Style**	**Plating 0,25µm Au ◇**
	Black	999-11-210-10-000000
	Not Insulated	999-11-110-10-000000
	Male Shorting Jumper 5,08 Spacing	
Fig. 2	**Color / Style**	**Plating 0,25µm Au ◇**
	Black	999-11-220-10-000000
	Not Insulated	999-11-112-10-000000
	Male Shorting Jumper 7,62 Spacing	
Fig. 3	**Color / Style**	**Plating 0,25µm Au ◇**
	Black	999-11-230-10-000000
	Not Insulated	999-11-113-10-000000

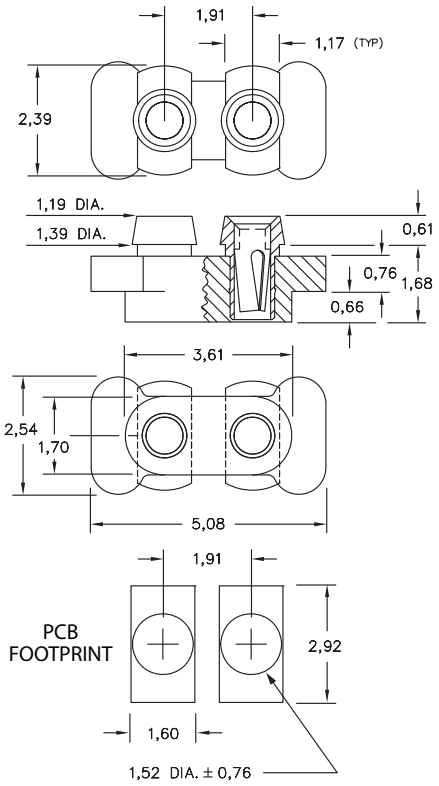

- Series 388 microphone socket is a bottom entry socket for microphones having 0,46 dia. pins on 1,91 centers.
- Designed to be surface mount and intrusive reflow soldered.
- Insulator is high temp. Nylon 46, rated UL 94 V-0.
- Series 388 use MM #8874 pins. See page 130 for details.

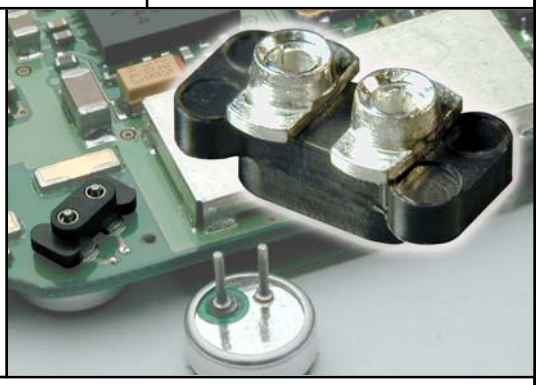

Microphone Socket

Ordering Information

XX=Plating Code See Below

388-XX-102-11-740800 (Discrete socket)

→ **Plating Code**

388-XX-102-11-740799

(Supplied on 12mm wide carrier tape per EIA-481: 6,500 per 330mm reel)

SPECIFY PLATING CODE XX=				99			44◇
Sleeve (Pin)				5,08µm Sn/Pb			5,08µm Sn
Contact (Clip)				5,08µm Sn/Pb			5,08µm Sn

THE BASIC RECEPTACLE

The basic conducting element used in printed circuit board (PCB) connections is the pin receptacle. The Mill-Max pin receptacle is typically used to make devices on the PC board pluggable while maintaining a low profile, or as the contact in a cable assembly. The machined shell or housing of pin receptacles is available in various styles depending on the application. The terminal end of pin receptacles has many variations: a round solder tail, a press-fit tail, a surface mount tail, crimp tail, solder-cup tail, swage tail or no tail.

Inside every Mill-Max receptacle is a contact clip. A contact clip is a conductive, multi-finger, progressive-die stamping that engages, scores and holds the mated pin, making an electrical and gas-tight connection at 3, 4 or 6 points of contact (depending upon the selected contact).

Mill-Max currently offers 34 styles of contacts to engage pins from 0,20mm to 2,59mm. A convenient contact selector chart is located on page 214 showing the different specifications of each contact.

Pin receptacles can be utilized as discrete connectors for the plugging and unplugging of components on pc boards. They can be utilized individually or in random arrays where the usage is small. They can be handled and loaded manually in preparation for soldering or, with a different style shell, for press-fitting. When a customer requires volume placement of Mill-Max receptacles, socket carriers or tape and reel packaging are tremendous labor-saving solutions for our customer.

In addition to the products found on the following pages, Mill-Max offers the following stock materials and diameters available for manufacture:

BRASS Alloy 360, 1/2 hard: 1,57/1,83/1,98/2,36/3,18/3,96/4,75/6,35 diameters
BRASS Alloy 360, 1/4 hard: 1,83mm/1,98mm diameters
BRASS TUBING: 1,83 O.D.x0,51 I.D./ 1,83 O.D.x0,64 I.D.
PHOSPHOR BRONZE Alloy 544: 1,57mm/1,83mm/1,98mm diameters
TELLURIUM COPPER Alloy 145: 2,01mm/2,36mm/3,18mm/3,96mm diameters

Mill-Max will gladly quote application specific products. Please complete the specification sheet on page 213 or send us your own drawings. We assure you of a fast response.

PIN RECEPTACLES
for 0,20 - 0,33 diameter pins (#04 contact) and 0,30 - 0,43 diameter pins (#10 contact) (see specific contact range on page 216)

8210

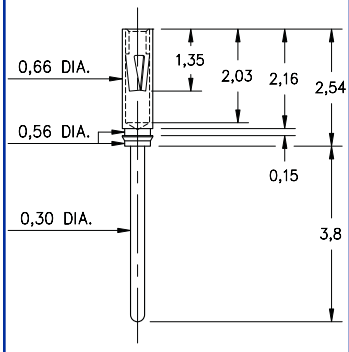

8210-0-15-15-04-27-04-0
Press-fit in 0,61/0,68 stepped hole

0464

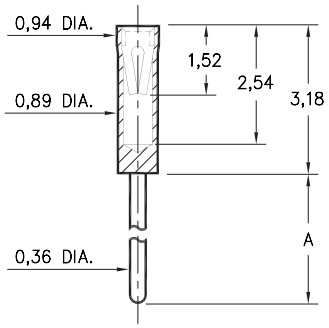

Basic Part Number	Length A
0464-0	3,18
0464-1	6,35

0464-X-15-XX-10-XX-04-0
Solder mount in 0,41 min. mounting hole

9225

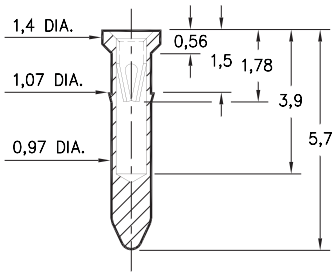

9225-0-15-XX-10-XX-10-0
Press-fit in 1,0 mounting hole

0529

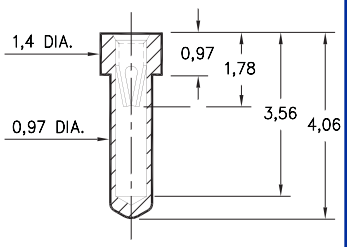

0529-0-15-XX-10-XX-10-0
Solder mount in 1,02 min. mounting hole

8947

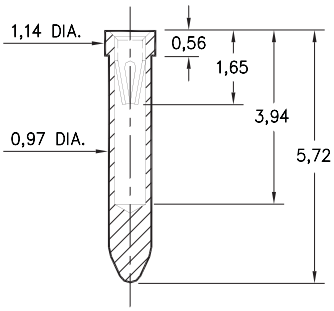

8947-0-15-XX-10-XX-10-0
Solder mount in 1,02 min. mounting hole

4993

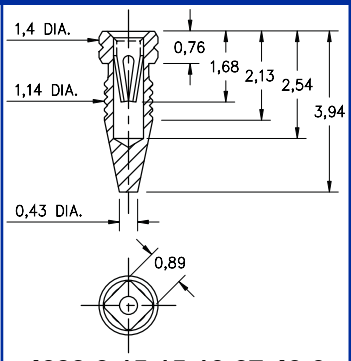

4993-0-15-15-10-27-40-0
Compliant press-fit in 1,04 - 1,12 Dia. mounting hole

SPECIFICATIONS

SHELL MATERIAL:
Brass Alloy 360, 1/2 Hard

CONTACT MATERIAL:
Beryllium Copper Alloy 172, HT

DIMENSION IN INCHES
TOLERANCES ON:
LENGTHS: ±0,13
DIAMETERS: ±0,05
ANGLES: ± 2°

ORDER CODE: XXXX - X - XX - XX - XX - XX - XX - 0

BASIC PART #

SPECIFY SHELL FINISH:
01 5,08 µm TIN/LEAD OVER NICKEL
80 5,08 µm TIN OVER NICKEL ◇
15 0,25 µm GOLD OVER NICKEL ◇

SPECIFY CONTACT FINISH:
02 2,54 µm TIN/LEAD OVER NICKEL
84 2,54 µm TIN OVER NICKEL ◇
27 0,76 µm GOLD OVER NICKEL ◇

SELECT CONTACT
#04 or #10 CONTACT (DATA ON PAGE 216)
(CONTACTS #04 & #10 NOT INTERCHANGEABLE)

RoHS 2002/95/EC

PIN RECEPTACLES
for 0,38 - 0,51 diameter pins (#11 contact) and 0,38 - 0,56 diameter pins (#21 contact)
(see specific contact range on page 217)

0548

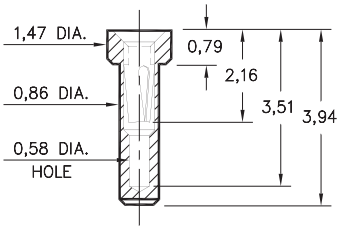

0548-0-15-XX-21-XX-10-0
Solder mount in 0,91 min. mounting hole

8975

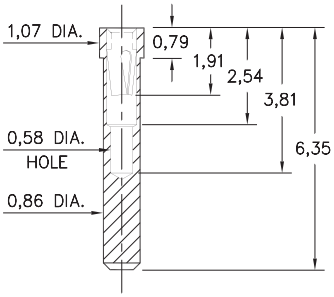

8975-0-15-XX-21-XX-10-0
Solder mount in 0,91 min. mounting hole

3016

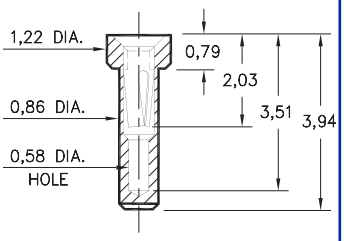

3016-0-15-XX-21-XX-10-0
Solder mount in 0,91 min. mounting hole

9548

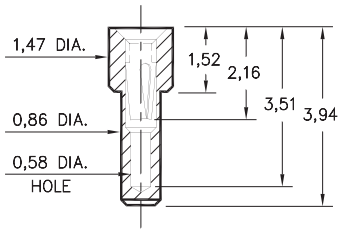

9548-0-15-XX-21-XX-10-0
Solder mount in 0,91 min. mounting hole

8637

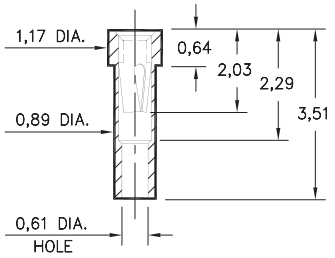

8637-0-15-XX-21-XX-10-0
Solder mount in 0,94 min. mounting hole

1407

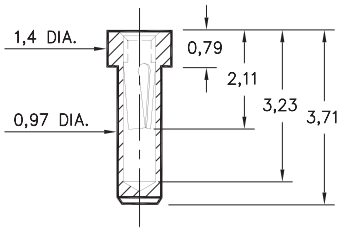

1407-0-15-XX-11-XX-10-0
Solder mount in 1,02 min. mounting hole

0553/8553

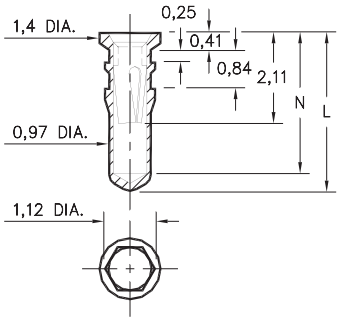

Basic Part Number	Length L	Depth N
0553-1	3,56	3,15
0553-2	4,32	3,91
0553-3	7,16	6,76
8553-0	6,22	5,82

X553-X-15-XX-X1-XX-10-0
Hex press-fit in 1,04 plated thru hole

0566

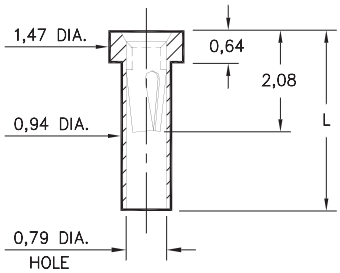

Basic Part Number	Length L
0566-1	2,11
0566-2	3,51

0566-X-15-XX-21-XX-10-0
Solder mount in 1,0 min. mounting hole

0442

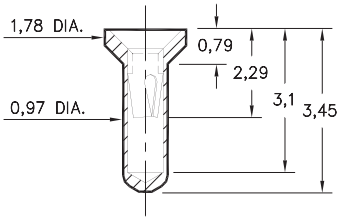

0442-0-15-XX-11-XX-10-0
Solder mount in 1,02 min. mounting hole

0554

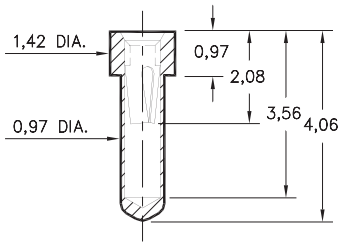

0554-0-15-XX-21-XX-10-0
Solder mount in 1,02 min. mounting hole

SPECIFICATIONS

SHELL MATERIAL:
Brass Alloy 360, 1/2 Hard

CONTACT MATERIAL:
Beryllium Copper Alloy 172, HT

DIMENSION IN INCHES
TOLERANCES ON:
LENGTHS: ±0,13
DIAMETERS: ±0,05
ANGLES: ± 2°

ORDER CODE: XXXX - X - 15 - XX - XX - XX - 10 - 0

BASIC PART #

SPECIFY SHELL FINISH:
01 5,08µm TIN/LEAD OVER NICKEL
80 5,08µm TIN OVER NICKEL ◇
15 0,25µm GOLD OVER NICKEL ◇

SPECIFY CONTACT FINISH:
02 2,54µm TIN/LEAD OVER NICKEL
84 2,54µm TIN OVER NICKEL ◇
27 0,76µm GOLD OVER NICKEL ◇

RoHS 2002/95/EC

SELECT CONTACT
#11 or #21 CONTACT (DATA ON PAGE 217)

PIN RECEPTACLES

for 0,38 - 0,46 diameter pins (#09 contact)
for 0,38 - 0,51 diameter pins (#11 contact)
and 0,38 - 0,56 diameter pins (#21 contact)
(see specific contact range on pages 216 & 217)

0467

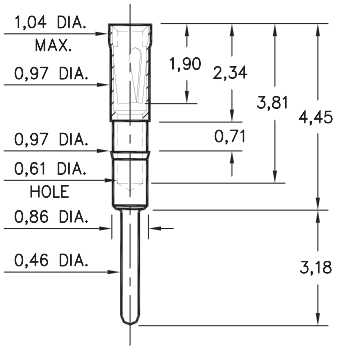

0467-0-15-XX-21-XX-04-0
Press-fit in 0,94 mounting hole

0552

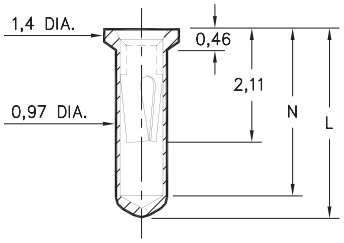

Basic Part Number	Length L	Depth N
0552-1	3,45	3,05
0552-2	4,32	3,81

0552-X-15-XX-X1-XX-10-0
Solder mount in 1,02 min. mounting hole
Also available on 16mm wide carrier tape: 1,500 parts per 330mm reel.
Order as: 0552-X-57-XX-X1-XX-10-0

5522

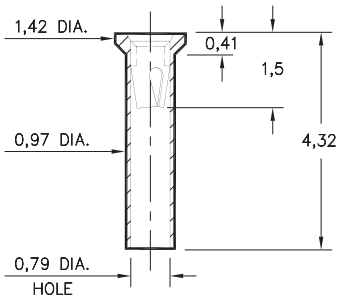

5522-0-15-XX-09-XX-10-0
Solder mount in 1,02 min. mounting hole

0569

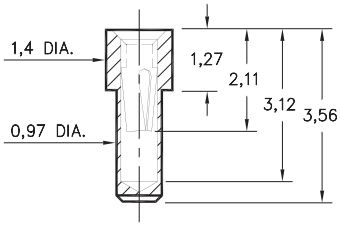

0569-0-15-XX-X1-XX-10-0
Solder mount in 1,02 min mounting hole

6023

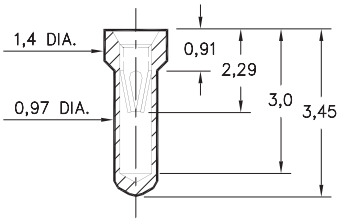

6023-0-15-XX-21-XX-10-0
Solder mount in 1,02 min mounting hole

6214

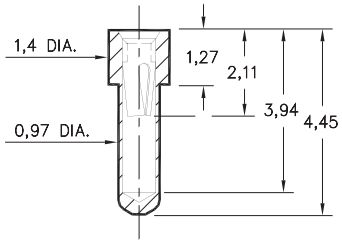

6214-0-15-XX-21-XX-10-0
Solder mount in 1,02 min mounting hole

2086

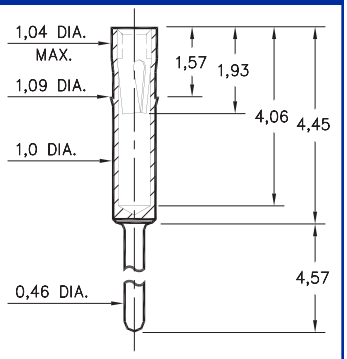

2086-0-15-XX-21-XX-04-0
Press-fit in 1,02 mounting hole

0461

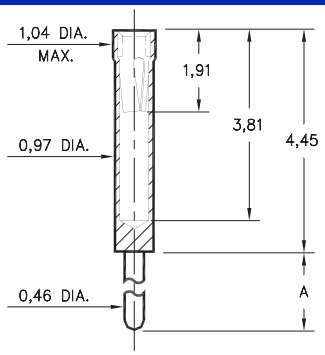

Basic Part Number	Length A
0461-0	10,16
0461-1	6,99
0461-2	4,57
0461-3	3,18
0461-4	1,52
0461-5	11,18

0461-X-15-XX-X1-XX-04-0
Solder mount in 0,51 min. mounting hole

8579

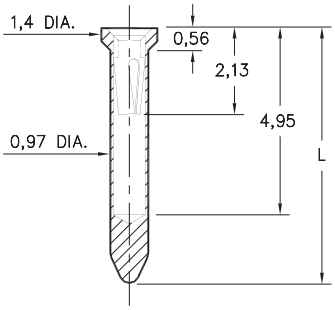

Basic Part Number	Length L
8579-0	5,94
8579-1	7,49

8579-0-15-XX-X1-XX-10-0
Solder mount in 1,02 min mounting hole

SPECIFICATIONS

SHELL MATERIAL:
Brass Alloy 360, 1/2 Hard

CONTACT MATERIAL:
Beryllium Copper Alloy 172, HT

DIMENSION IN INCHES
TOLERANCES ON:
LENGTHS: ±0,13
DIAMETERS: ±0,05
ANGLES: ± 2°

ORDER CODE: XXXX - X - 15 - XX - XX - XX - XX - 0

BASIC PART #

SPECIFY SHELL FINISH:
01 5,08µm TIN/LEAD OVER NICKEL
80 5,08µm TIN OVER NICKEL ◇
15 0,25µm GOLD OVER NICKEL ◇

SPECIFY CONTACT FINISH:
02 2,54µm TIN/LEAD OVER NICKEL
84 2,54µm TIN OVER NICKEL ◇
27 0,76µm GOLD OVER NICKEL ◇

RoHS 2002/95/EC

SELECT CONTACT
#09, #11 or #21 CONTACT (DATA ON PAGE 217)

PIN RECEPTACLES
for 0,38 - 0,51 diameter pins (#11 contact) and 0,38 - 0,56 diameter pins (#21 contact) (see specific contact range on page 217)

8467

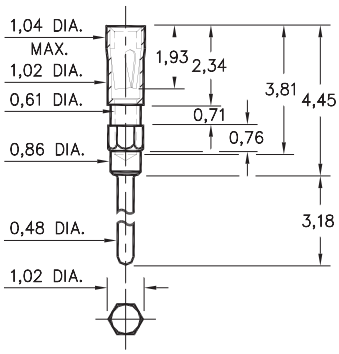

8467-0-15-XX-21-XX-04-0
Hex press-fit in 0,91plated thru hole

6192

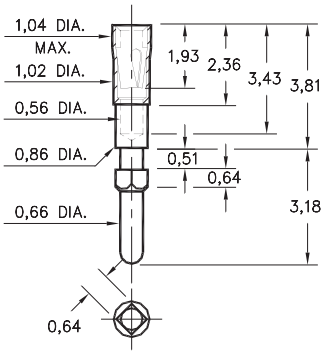

6192-0-15-XX-21-XX-04-0
Square press-fit in 0,81 plated thru hole

9553

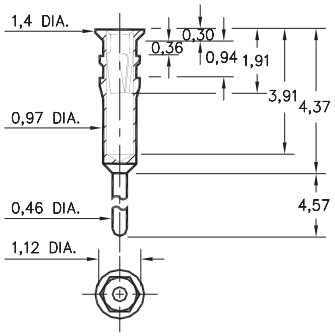

9553-0-15-XX-X1-XX-04-0
Hex press-fit in 1,04 plated thru hole

5531

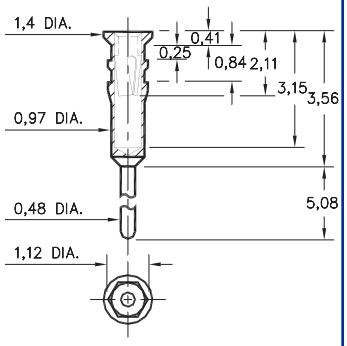

5531-0-15-XX-21-XX-10-0
Hex press-fit in 1,04 plated thru hole

7553

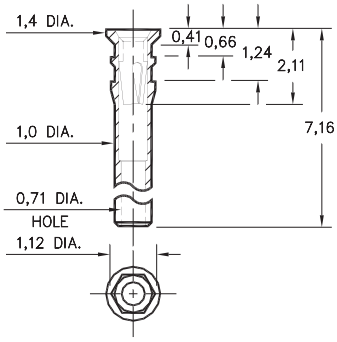

7553-0-15-XX-11-XX-10-0
Hex press-fit in 1,04 plated thru hole

9407

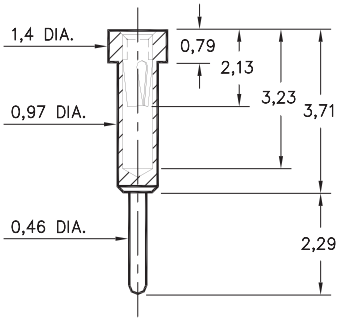

9407-0-15-XX-11-XX-10-0
Solder mount in 1,02 min. mounting hole

9462

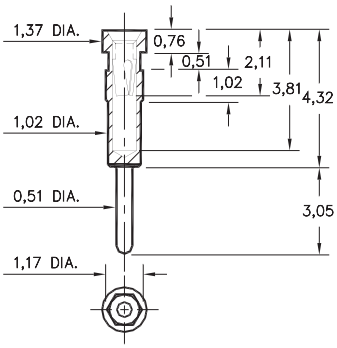

9462-0-15-XX-21-XX-04-0
Hex press-fit in 1,09 plated thru hole

1147

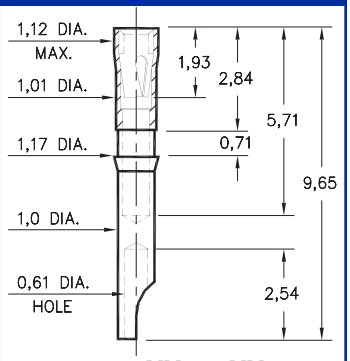

1147-0-18-XX-21-XX-10-0
Press-fit in 1,09 min. mounting hole

3061

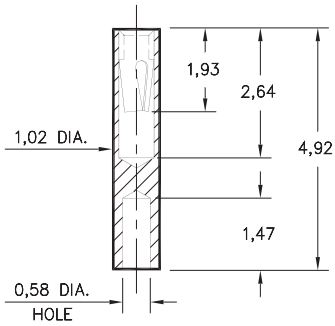

3061-0-19-XX-21-XX-10-0
Wire Termination

0579

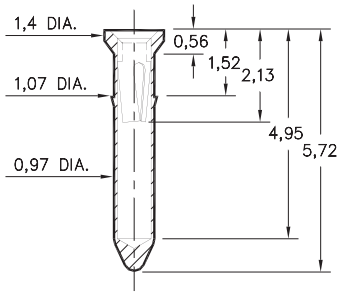

0579-0-15-XX-X1-XX-10-0
Press-fit in 1,02 mounting hole

8874

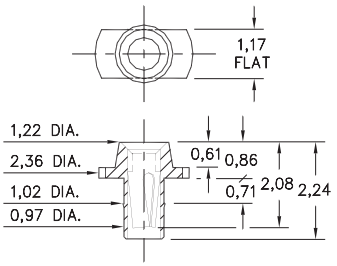

8874-0-15-XX-11-XX-10-0
Bottom entry
Surface mount

0613

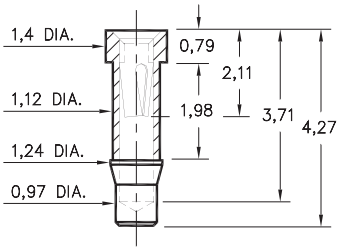

0613-0-15-XX-21-XX-10-0
Press-fit in 1,19 mounting hole

SPECIFICATIONS

SHELL MATERIAL:
Brass Alloy 360, 1/2 Hard

CONTACT MATERIAL:
Beryllium Copper Alloy 172, HT

DIMENSION IN INCHES
TOLERANCES ON:
LENGTHS: ±0,13
DIAMETERS: ±0,05
ANGLES: ± 2°

ORDER CODE: XXXX - X - XX - XX - XX - XX - XX - 0

BASIC PART #

SPECIFY SHELL FINISH:
01 5,08µm TIN/LEAD OVER NICKEL
80 5,08µm TIN OVER NICKEL ◇
15 0,25µm GOLD OVER NICKEL ◇

SPECIFY CONTACT FINISH:
02 2,54µm TIN/LEAD OVER NICKEL
84 2,54µm TIN OVER NICKEL ◇
27 0,76µm GOLD OVER NICKEL ◇

RoHS 2002/95/EC

SELECT CONTACT
#11 or #21 CONTACT (DATA ON PAGE 217)

PIN RECEPTACLES
for 0,38 - 0,51 diameter pins (#11 contact) and 0,38 - 0,56 diameter pins (#05 & #21 contacts)
(see specific contact range on page 217)

0489

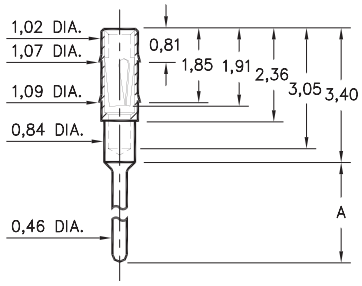

Basic Part Number	Length A
0489-0	2,59
0489-1	5,05
0489-2	7,59

0489-X-15-XX-11-XX-04-0
Press-fit in 1,04 mounting hole.

0463

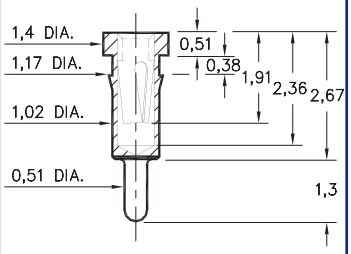

0463-0-15-XX-21-XX-04-0
Press-fit in 1,09 mounting hole.
shell is Phos. Br. Alloy 544 (B2)

0466

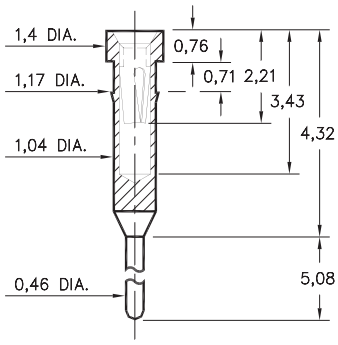

0466-0-15-XX-21-XX-04-0
Press-fit in 1,09 mounting hole.
shell is Phos. Br. Alloy 544 (B2)

7491

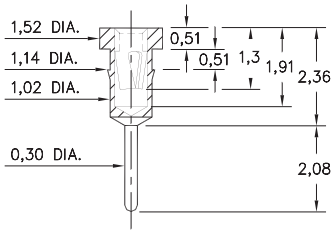

7491-0-15-XX-X1-XX-04-0
Press-fit in 1,07 mounting hole

0462

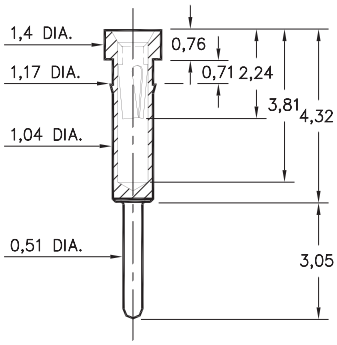

0462-0-15-XX-X1-XX-04-0
Press-fit in 1,09 mounting hole

0560

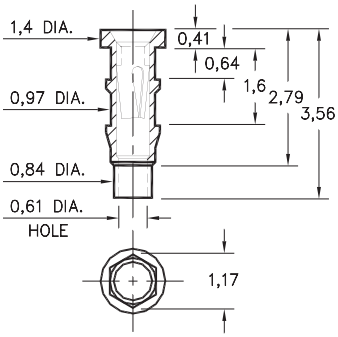

0560-0-15-XX-11-XX-10-0
Hex press-fit in 1,09 plated thru hole

5552

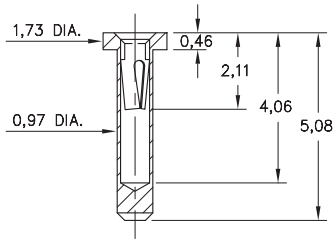

5552-0-15-XX-05-XX-10-0
Solder mount in 1,02 min. mounting hole

4890

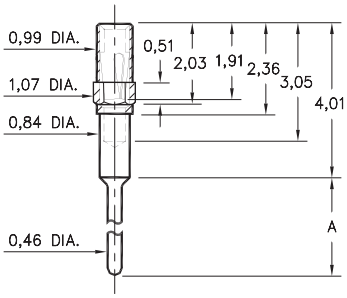

Basic Part Number	Length A
4890-0	2,59
4890-1	5,05
4890-2	7,59

4890-X-15-XX-11-XX-04-0
Octagonal press-fit in 1,04 mounting hole.

SPECIFICATIONS

SHELL MATERIAL:
Brass Alloy 360, 1/2 Hard

CONTACT MATERIAL:
Beryllium Copper Alloy 172, HT

DIMENSION IN INCHES
TOLERANCES ON:
LENGTHS: ±0,13
DIAMETERS: ±0,05
ANGLES: ± 2°

ORDER CODE: XXXX - X - XX - XX - XX - XX - XX - 0

BASIC PART #

SPECIFY SHELL FINISH:
01 5,08µm TIN/LEAD OVER NICKEL
80 5,08µm TIN OVER NICKEL ◇
15 0,25µm GOLD OVER NICKEL ◇

SPECIFY CONTACT FINISH:
02 2,54µm TIN/LEAD OVER NICKEL
84 2,54µm TIN OVER NICKEL ◇
27 0,76µm GOLD OVER NICKEL ◇

RoHS 2002/95/EC

SELECT CONTACT
#05, #11 or #21 CONTACT (DATA ON PAGE 217)

PIN RECEPTACLES
for 0,38 - 0,56 diameter pins

0512

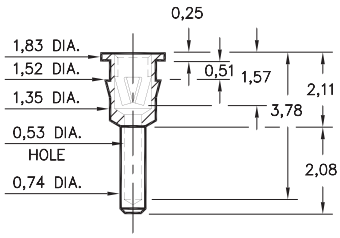

0512-0-15-XX-12-XX-04-0
Press-fit in 1,45 mounting hole

0703

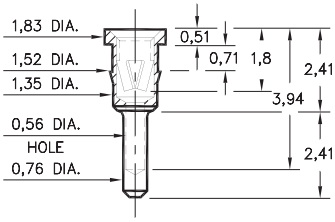

0703-0-15-XX-12-XX-04-0
Press-fit in 1,45 mounting hole

0574

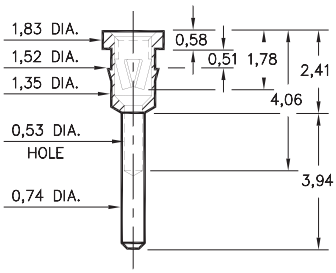

0574-0-15-XX-12-XX-04-0
Press-fit in 1,45 mounting hole

0468

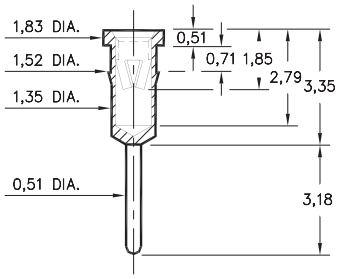

0468-0-15-XX-12-XX-04-0
Press-fit in 1,45 mounting hole

0550

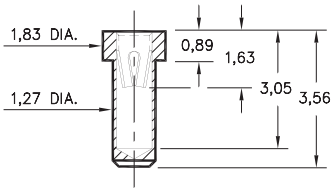

0550-0-15-XX-22-XX-10-0
Solder mount in 1,32 min.
mounting hole

0671

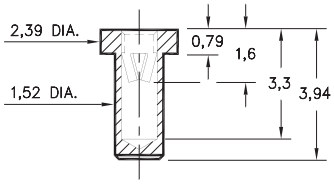

0671-0-15-XX-12-XX-10-0
Solder mount in 1,6 min.
mounting hole

0707

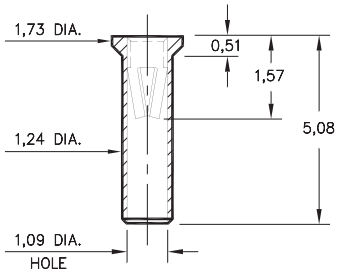

0707-0-15-XX-12-XX-10-0
Solder mount in 1,3 min.
mounting hole

5739

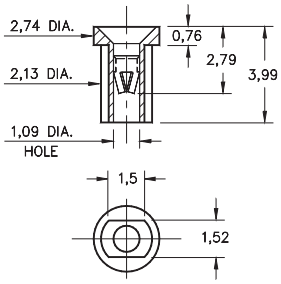

5739-0-18-XX-12-XX-10-0
Surface mount
Also available on 16mm wide carrier tape: 3,000 parts per 330mm reel.
Order as: 5739-0-58-XX-12-XX-10-0

8894

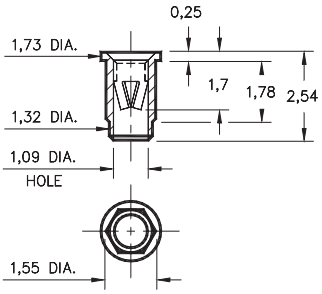

8894-0-15-XX-12-XX-10-0
Hex press-fit in 1,5 plated
thru hole

1534

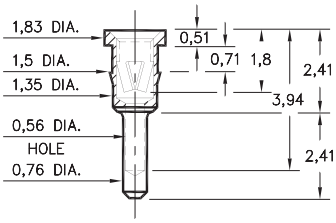

1534-0-15-XX-12-XX-04-0
Press-fit in 1,42 mounting hole

SPECIFICATIONS

SHELL MATERIAL:
Brass Alloy 360, 1/2 Hard

CONTACT MATERIAL:
Beryllium Copper Alloy 172, HT

DIMENSION IN INCHES
TOLERANCES ON:
LENGTHS: ±0,13
DIAMETERS: ±0,05
ANGLES: ± 2°

ORDER CODE: XXXX - X - 1X - XX - XX - XX - XX - 0

BASIC PART #

SPECIFY SHELL FINISH:
01 5,08µm TIN/LEAD OVER NICKEL
80 5,08µm TIN OVER NICKEL ◇
15 0,25µm GOLD OVER NICKEL ◇

SPECIFY CONTACT FINISH:
02 2,54µm TIN/LEAD OVER NICKEL
84 2,54µm TIN OVER NICKEL ◇
27 0,76µm GOLD OVER NICKEL ◇

RoHS 2002/95/EC

SELECT CONTACT
#12 or #22 CONTACT (DATA ON PAGE 218)

0501

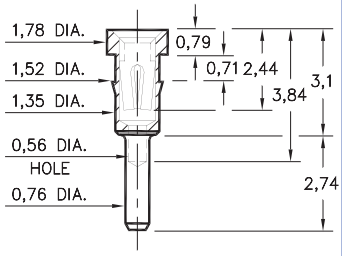

0501-0-15-XX-30-XX-04-0
Press-fit in 1,45 mounting hole

8427

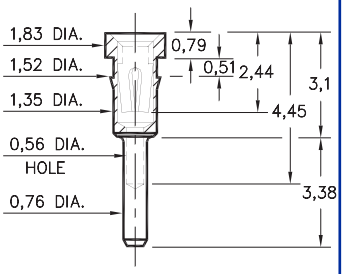

8427-0-15-XX-30-XX-04-0
Press-fit in 1,45 mounting hole

1434

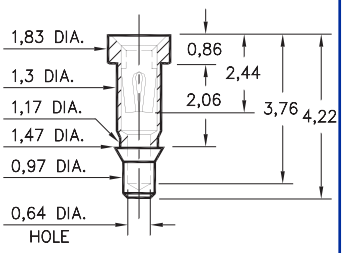

1434-0-15-XX-30-XX-10-0
Press-fit in 1,4 mounting hole

9970

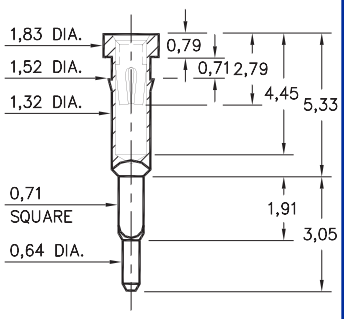

9970-0-15-XX-30-XX-04-0
Square press-fit for 0,81 ±0,05
plated thru hole

5970

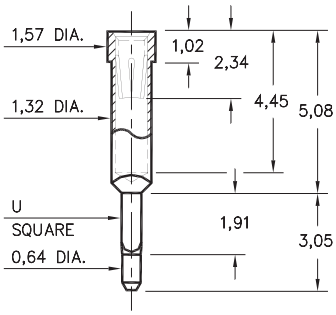

Basic Part Number	U Square	Mounting Hole
5970-1	0,71	0,81
5970-2	0,86	1,0

5970-X-15-XX-32-XX-04-0
Square press-fit for 0,81 or 1,0 ±0,05
plated thru hole

0477/0478

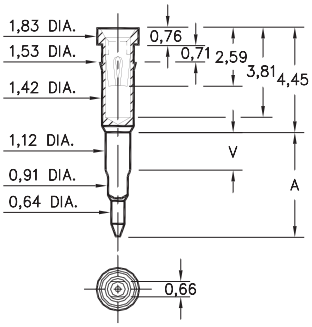

Basic Part Number	Board Thick-ness	Length V	Length A
0477-0	1,57	1,91	4,45
0478-0	3,18	3,56	6,35

047X-0-18-XX-30-XX-04-0
Solderless press-fit in 0,97 +0,08 / -0,05
plated thru hole (use 1.1mm drill prior to plating)

4612

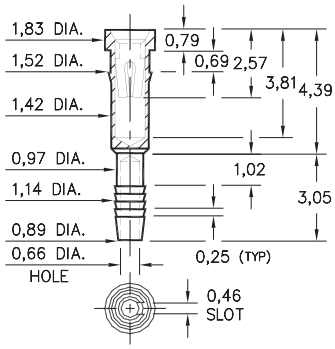

4612-0-31-XX-30-XX-04-0
Compliant press-fit in 1,02 ±0,08 plated
hole. For 1,52 → 2,54 thick board

4613

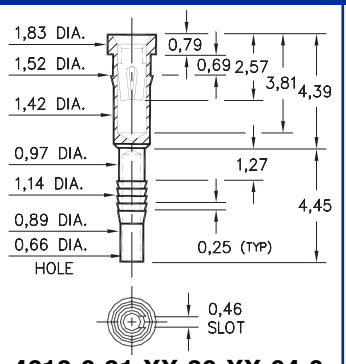

4613-0-31-XX-30-XX-04-0
Compliant press-fit in 1,02 ±0,08 plated
hole. For 2,29 → 3,30 thick board

0680

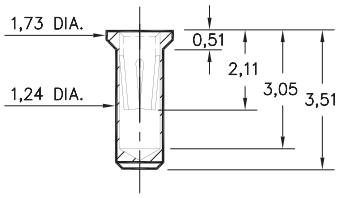

0680-0-15-XX-32-XX-10-0
Solder mount in 1,3 min.
mounting hole

0149

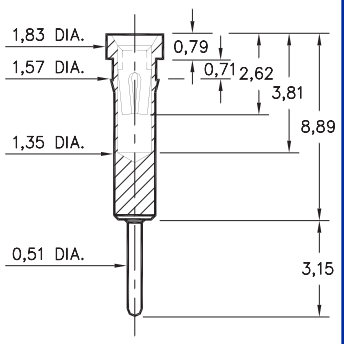

0149-0-15-XX-30-XX-04-0
Press-fit in 1,5 mounting hole

SPECIFICATIONS

SHELL MATERIAL:
Brass Alloy 360, 1/2 Hard

CONTACT MATERIAL:
Beryllium Copper Alloy 172, HT

DIMENSION IN INCHES
TOLERANCES ON:
LENGTHS: ±0,13
DIAMETERS: ±0,05
ANGLES: ± 2°

ORDER CODE: XXXX - X - XX - XX - 3X - XX - XX - 0

BASIC PART #

SPECIFY SHELL FINISH:
01 5,08µm TIN/LEAD OVER NICKEL
80 5,08µm TIN OVER NICKEL ◇
15 0,25µm GOLD OVER NICKEL ◇

SPECIFY CONTACT FINISH:
02 2,54µm TIN/LEAD OVER NICKEL
84 2,54µm TIN OVER NICKEL ◇
27 0,76µm GOLD OVER NICKEL ◇

RoHS 2002/95/EC

SELECT CONTACT
#30 or #32 CONTACT (DATA ON PAGES 218 & 219)

PIN RECEPTACLES
for 0,38 - 0,64 diameter pins

0660

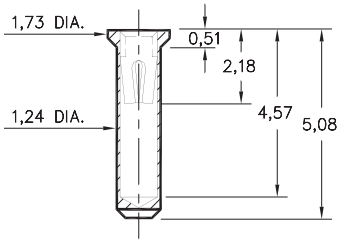

0660-0-15-XX-30-XX-10-0
Solder mount in 1,3 min. mounting hole

0677

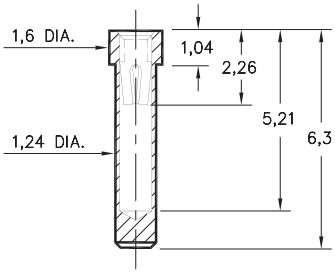

0677-0-15-XX-30-XX-10-0
Solder mount in 1,3 min. mounting hole

0555

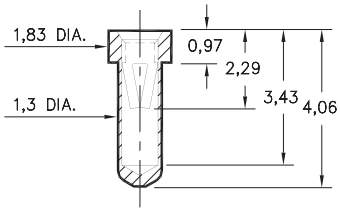

0555-0-15-XX-20-XX-10-0
Solder mount in 1,35 min. mounting hole

0558

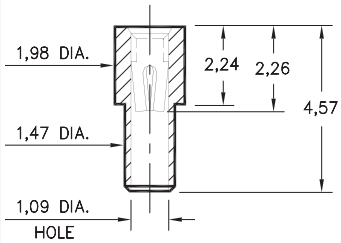

0558-0-15-XX-30-XX-10-0
Solder mount in 1,55 min. mounting hole

0675/0679

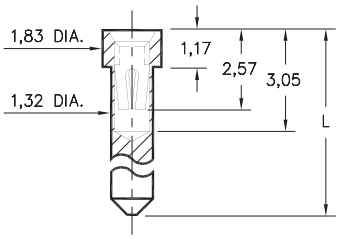

Basic Part Number	Length L
0675-0-0	3,68
0679-0	5,16

067X-0-15-XX-30-XX-10-0
Solder mount in 1,37 min. mounting hole

1065/1066/7065

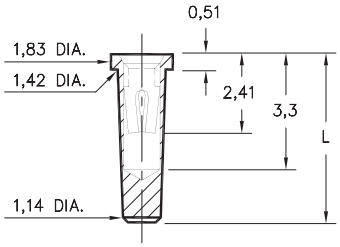

Basic Part Number	Length L
1065-0	4,83
1066-0	4,06
7065-0	4,6

X06X-0-15-XX-30-XX-10-0
Solder mount in 1,4 min. mounting hole

0682

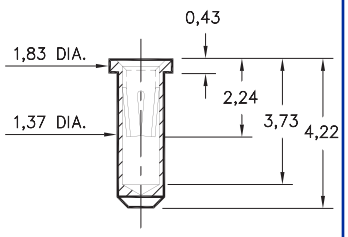

0682-0-15-XX-32-XX-10-0
Solder mount in 1,42 min. mounting hole

0667

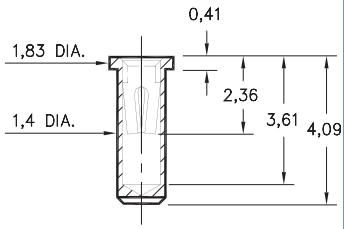

0667-0-15-XX-30-XX-10-0
Solder mount in 1,45 min. mounting hole

0665

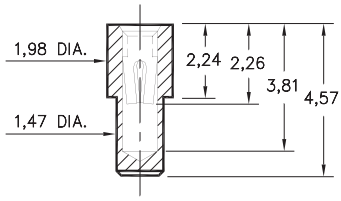

0665-0-15-XX-30-XX-10-0
Solder mount in 1,55 min. mounting hole

4286

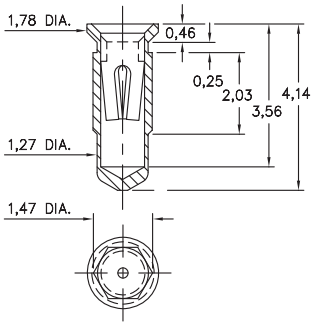

4286-0-15-XX-30-XX-10-0
Hex press-fit in 1,4 plated thru hole

SPECIFICATIONS

SHELL MATERIAL:
Brass Alloy 360, 1/2 Hard

CONTACT MATERIAL:
Beryllium Copper Alloy 172, HT

DIMENSION IN INCHES
TOLERANCES ON:
LENGTHS: ±0,13
DIAMETERS: ±0,05
ANGLES: ±.002°

ORDER CODE: XXXX - X - 15 - XX - XX - XX - 10 - 0

BASIC PART #

SPECIFY SHELL FINISH:
01 5,08µm TIN/LEAD OVER NICKEL
80 5,08µm TIN OVER NICKEL ◇
15 0,25µm GOLD OVER NICKEL ◇

SPECIFY CONTACT FINISH:
02 2,54µm TIN/LEAD OVER NICKEL
84 2,54µm TIN OVER NICKEL ◇
27 0,76µm GOLD OVER NICKEL ◇

RoHS 2002/95/EC

SELECT CONTACT
#30 or #32 CONTACT (DATA ON PAGES 218 & 219)

0669

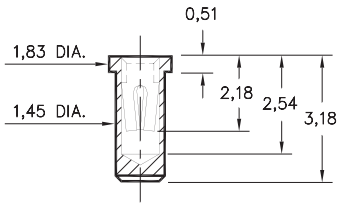

0669-0-15-XX-30-XX-10-0
Solder mount in 1,52 min. mounting hole

0670

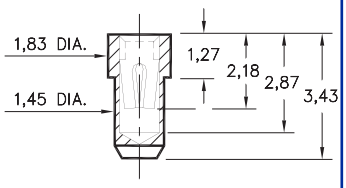

0670-0-15-XX-30-XX-10-0
Solder mount in 1,52 min. mounting hole

0673

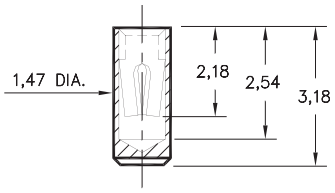

0673-0-15-XX-30-XX-10-0
Surface Mount

0666

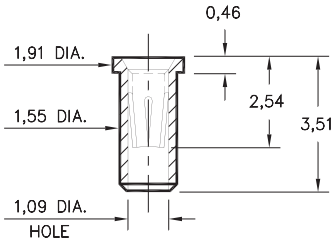

0666-0-15-XX-32-XX-10-0
Solder mount in 1,63 min. mounting hole
Also available on 24mm wide carrier tape: 1,500 parts per 330mm reel.
Order as: 0666-0-57-XX-32-XX-10-0

0341

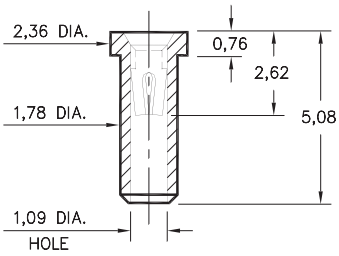

0341-0-15-XX-30-XX-10-0
Solder mount in 1,85 mounting hole

0252

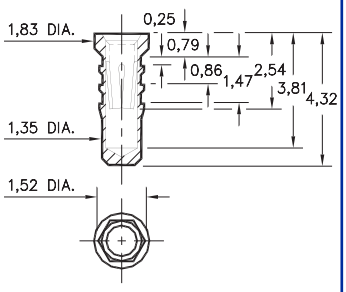

0252-0-15-XX-32-XX-10-0
Hex press-fit in 1,45 plated thru hole

0678

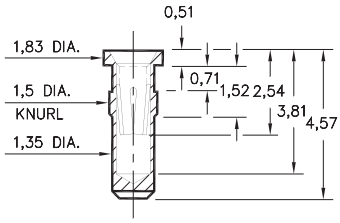

0678-0-15-XX-32-XX-10-0
Press-fit in 1,45 mounting hole

0676

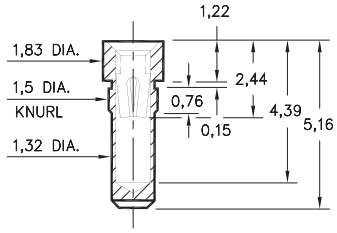

0676-0-15-XX-30-XX-10-0
Press-fit in 1,45 mounting hole

0697

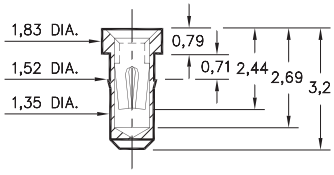

0697-0-15-XX-30-XX-10-0
Press-fit in 1,45 mounting hole

0668

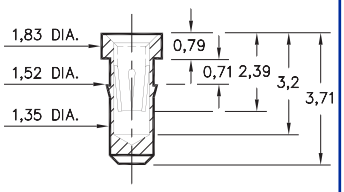

0668-0-15-XX-30-XX-10-0
Press-fit in 1,45 mounting hole

0253/1033

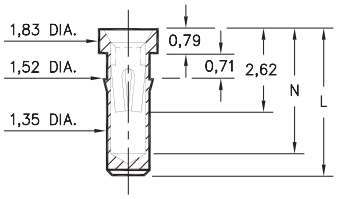

Basic Part Number	Length L	Depth N
0253-0	4,39	3,76
1033-0	5,16	4,11

XXX3-0-15-XX-30-XX-10-0
Press-fit in 1,45 mounting hole

SPECIFICATIONS

SHELL MATERIAL:
Brass Alloy 360, 1/2 Hard

CONTACT MATERIAL:
Beryllium Copper Alloy 172, HT

DIMENSION IN INCHES
TOLERANCES ON:
LENGTHS: ±0,13
DIAMETERS: ±0,05
ANGLES: ± 2°

ORDER CODE: XXXX - X - 15 - XX - 3X - XX - XX - 0

BASIC PART #

SPECIFY SHELL FINISH:
01 5,08µm TIN/LEAD OVER NICKEL
80 5,08µm TIN OVER NICKEL ◇
15 0,25µm GOLD OVER NICKEL ◇

SPECIFY CONTACT FINISH:
02 2,54µm TIN/LEAD OVER NICKEL
84 2,54µm TIN OVER NICKEL ◇
27 0,76µm GOLD OVER NICKEL ◇

RoHS 2002/95/EC

SELECT CONTACT
#30 or #32 CONTACT (DATA ON PAGES 218 & 219)

PIN RECEPTACLES
for 0,38 - 0,64 diameter pins

4011

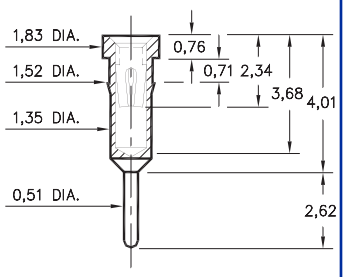

4011-0-15-XX-30-XX-04-0
Press-fit in 1,45 mounting hole

1801

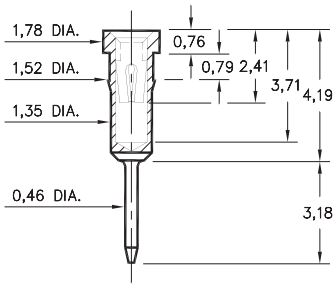

1801-0-15-XX-30-XX-04-0
Press-fit in 1,45 mounting hole
Shell is Ph. Br. Alloy 544 (B2)

1001

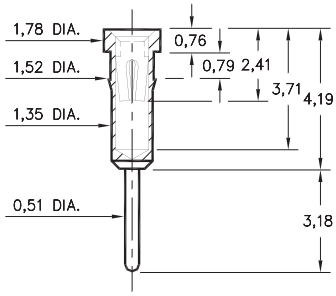

1001-0-15-XX-3X-XX-04-0
Press-fit in 1,45 mounting hole

0156

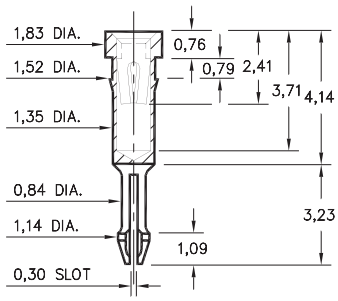

0156-0-18-XX-30-XX-04-0
Self-retention socket pin 0,97-1,09 hole prior to soldering

0255

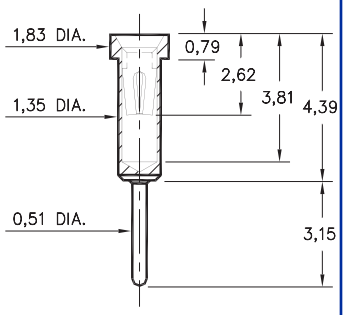

0255-0-15-XX-30-XX-04-0
Solder mount in 0,56 min. mounting hole

1109

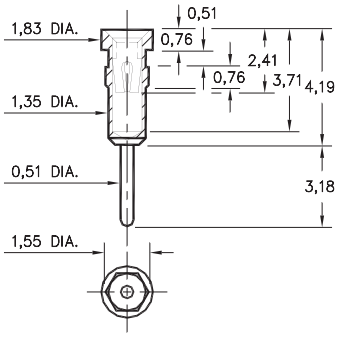

1109-0-15-XX-30-XX-04-0
Hex press-fit in 1,45 plated thru hole

3013

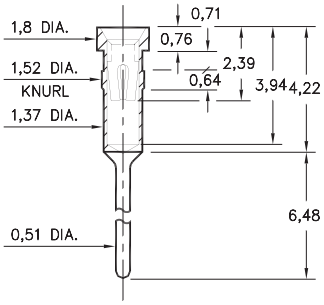

3013-0-15-XX-32-XX-04-0
Press-fit in 1,45 mounting hole

0134

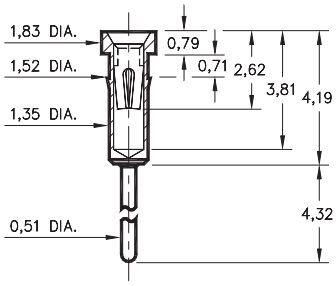

0134-0-15-XX-3X-XX-04-0
Press-fit in 1,45 mounting hole

0132/0135

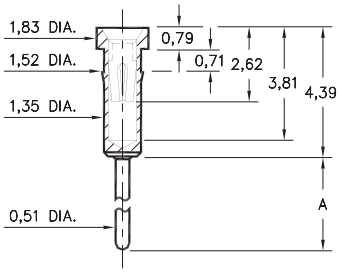

Basic Part Number	Length A
0132-0	6,93
0135-0	4,65

013X-0-15-XX-30-XX-04-0
Press-fit in 1,45 mounting hole

0133/0147

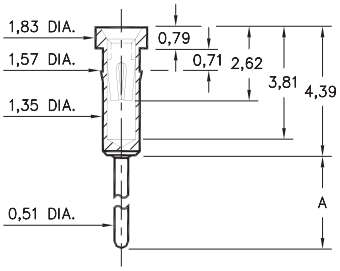

Basic Part Number	Length A
0133-0	9,7
0147-0	14,3

01XX-0-15-XX-30-XX-04-0
Press-fit in 1,5 mounting hole

SPECIFICATIONS

SHELL MATERIAL:
Brass Alloy 360, 1/2 Hard

CONTACT MATERIAL:
Beryllium Copper Alloy 172, HT

DIMENSION IN INCHES
TOLERANCES ON:
LENGTHS: ±0,13
DIAMETERS: ±0,05
ANGLES: ± 2°

ORDER CODE: XXXX - X - 1X - XX - 3X - XX - 04 - 0

BASIC PART #

SPECIFY SHELL FINISH:
01 5,08µm TIN/LEAD OVER NICKEL
80 5,08µm TIN OVER NICKEL ◇
15 0,25µm GOLD OVER NICKEL ◇

SPECIFY CONTACT FINISH:
02 2,54µm TIN/LEAD OVER NICKEL
84 2,54µm TIN OVER NICKEL ◇
27 0,76µm GOLD OVER NICKEL ◇

RoHS 2002/95/EC

SELECT CONTACT
#30 or #32 CONTACT (DATA ON PAGES 218 & 219)

1005/1013/8898

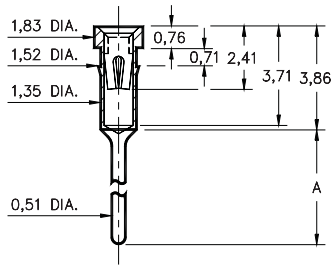

Basic Part Number	Length A
1005-0	3,51
1013-0	4,19
8898-0	5,69

NOTE: 8898 is not annealed & not suitable for auto-clinching

XXXX-0-15-XX-3X-XX-04-0
Press-fit in 1,45 mounting hole
1/4 hard brass shell for auto-clinching

0145/0146

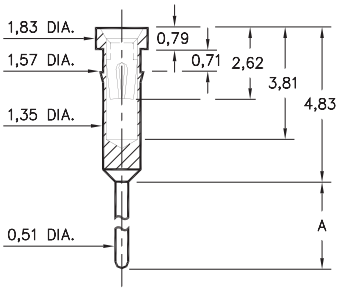

Basic Part Number	Length A
0145-0	7,62
0146-0	10,41

014X-0-15-XX-30-XX-04-0
Press-fit in 1,5 mounting hole

4378

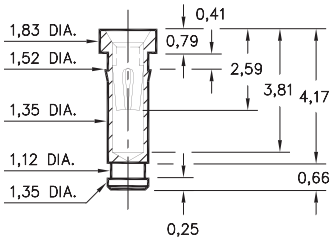

4378-0-15-XX-30-XX-10-0
Press-fit in 1,45 mounting hole

0556

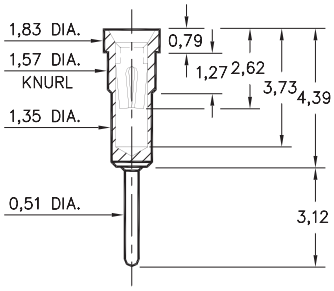

0556-0-15-XX-30-XX-04-0
Press-fit in 1,5 mounting hole

1103

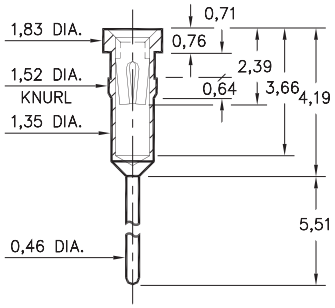

1103-0-15-XX-30-XX-04-0
Press-fit in 1,45 mounting hole

9234

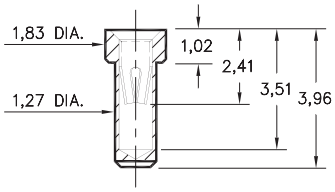

9234-0-15-XX-30-XX-10-0
Solder mount in 1,32 min. mounting hole

0136/37/38/39/41/48/52

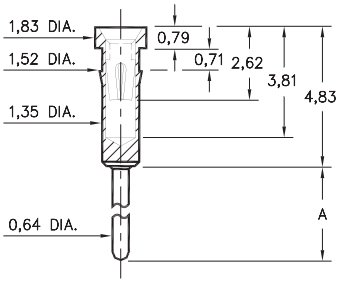

Basic Part Number	Length A
0136-0	30,86
0137-0	14,22
0138-0	5,33
0139-0	16,13
0141-0	17,78
0148-0	11,56
0152-0	10,41

01XX-0-15-XX-30-XX-04-0
Press-fit in 1,45 mounting hole

0447

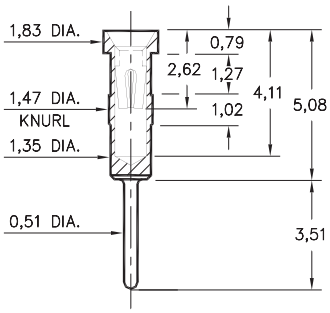

0447-0-15-XX-30-XX-04-0
Press-fit in 1,42 mounting hole

5660

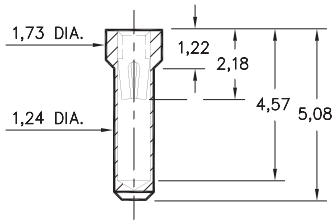

5660-0-15-XX-30-XX-10-0
Solder mount in 1,3 min. mounting hole

SPECIFICATIONS

SHELL MATERIAL:
Brass Alloy 360, 1/2 Hard

CONTACT MATERIAL:
Beryllium Copper Alloy 172, HT

DIMENSION IN INCHES
TOLERANCES ON:
LENGTHS: ±0,13
DIAMETERS: ±0,05
ANGLES: ± 2°

ORDER CODE: XXXX - X - 15 - XX - 3X - XX - XX - 0

BASIC PART #

SPECIFY SHELL FINISH:
01 5,08µm TIN/LEAD OVER NICKEL
80 5,08µm TIN OVER NICKEL ◇
15 0,25µm GOLD OVER NICKEL ◇

SPECIFY CONTACT FINISH:
02 2,54µm TIN/LEAD OVER NICKEL
84 2,54µm TIN OVER NICKEL ◇
27 0,76µm GOLD OVER NICKEL ◇

RoHS 2002/95/EC

SELECT CONTACT
#30 or #32 CONTACT (DATA ON PAGES 218 & 219)

7132

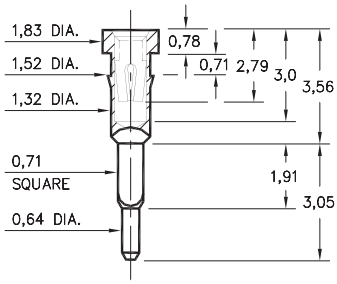

7132-0-15-XX-30-XX-04-0
Square press-fit for 0,81 ±0,05 plated thru hole

8445

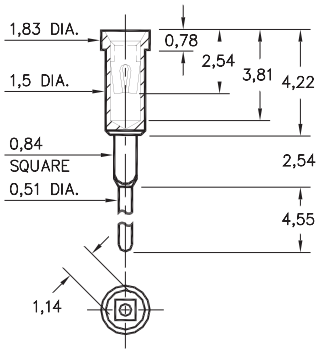

8445-0-15-XX-30-XX-04-0
Square press-fit for 0,99 ±0,05 plated thru hole

1038

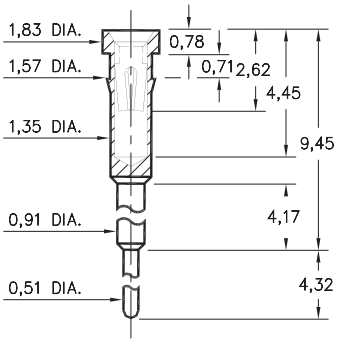

1038-0-15-XX-30-XX-04-0
Press-fit in 1,5 mounting hole

1261

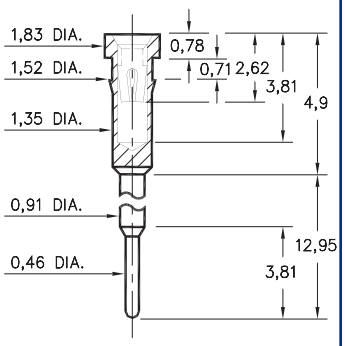

1261-0-15-XX-30-XX-04-0
Press-fit in 1,45 mounting hole

0153

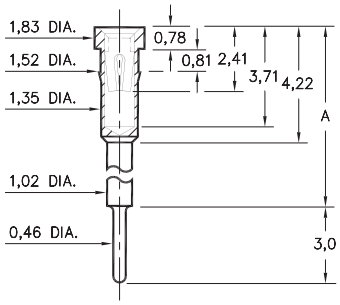

Basic Part Number	Height A
0153-1	5,99
0153-2	8,0
0153-3	10,21
0153-4	11,99
0153-5	15,09
0153-6	17,75

0153-X-15-XX-30-XX-04-0
Press-fit in 1,45 mounting hole

1602/1610

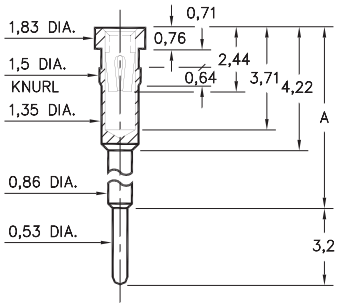

Basic Part Number	Height A
1602-0	11,2
1610-0	16,31

16XX-0-15-XX-30-XX-04-0
Press-fit in 1,45 mounting hole

0903/0904

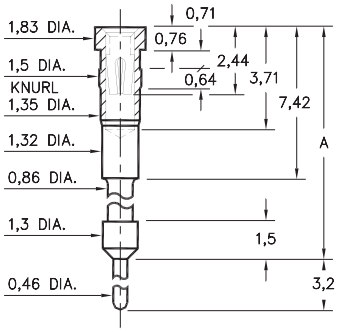

Basic Part Number	Height A
0903-0	21,36
0904-0	28,98

090X-0-15-XX-30-XX-04-0
Press-fit in 1,45 mounting hole

8252

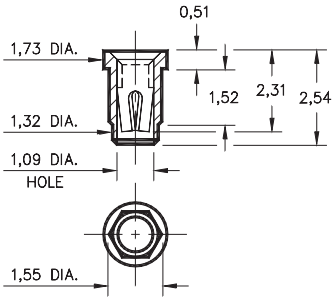

8252-0-15-XX-30-XX-10-0
Press-fit in 1,45 plated thru hole

4078

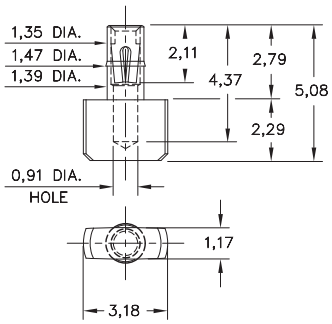

4078-0-15-XX-30-XX-40-0
Press-fit in 1,45 mounting hole

SPECIFICATIONS

SHELL MATERIAL:
Brass Alloy 360, 1/2 Hard

CONTACT MATERIAL:
Beryllium Copper Alloy 172, HT

DIMENSION IN INCHES
TOLERANCES ON:
LENGTHS: ±0,13
DIAMETERS: ±0,05
ANGLES: ± 2°

ORDER CODE: XXXX - X - 15 - XX - 30 - XX - XX - 0

BASIC PART #

SPECIFY SHELL FINISH:
01 5,08µm TIN/LEAD OVER NICKEL
80 5,08µm TIN OVER NICKEL ◇
15 0,25µm GOLD OVER NICKEL ◇

SPECIFY CONTACT FINISH:
02 2,54µm TIN/LEAD OVER NICKEL
84 2,54µm TIN OVER NICKEL ◇
27 0,76µm GOLD OVER NICKEL ◇

RoHS 2002/95/EC

CONTACT
#30 CONTACT (DATA ON PAGE 218)

1707

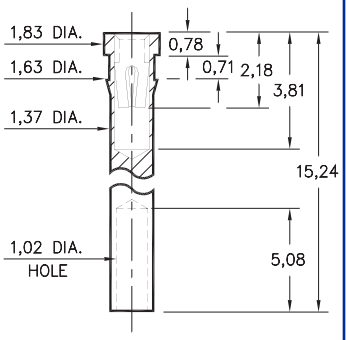

1707-0-19-XX-30-XX-10-0
Press-fit in 1,55 mounting hole

0240

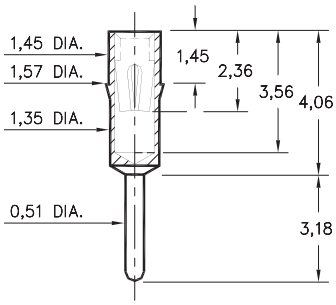

0240-0-15-XX-30-XX-04-0
Press-fit in 1,49 mounting hole

0307

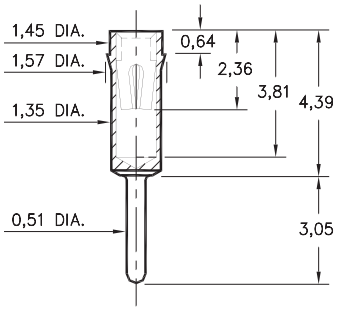

0307-0-15-XX-30-XX-04-0
Press-fit in 1,5 mounting hole

1753

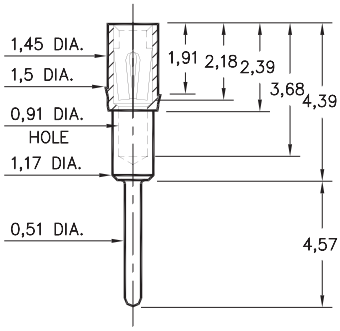

1753-0-15-XX-30-XX-04-0
Press-fit in 1,45 mounting hole

1705/1706/1762

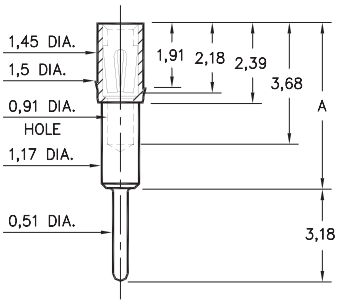

Basic Part Number	Height A
1705-0	4,19
1706-0	5,54
1762-0	7,62

17XX-0-15-XX-3X-XX-04-0
Press-fit in 1,45 mounting hole

0672

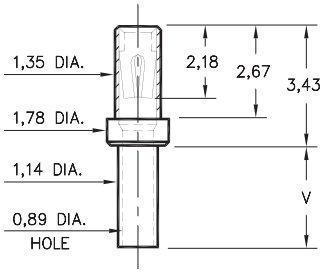

Basic Part Number	Board Thickness	Length V
0672-1	0,79	1,32
0672-2	1,57	2,13
0672-3	2,39	2,92
0672-4	3,18	3,71

0672-X-15-XX-30-XX-10-0
Swage mount in 1,24 hole

1024/1104

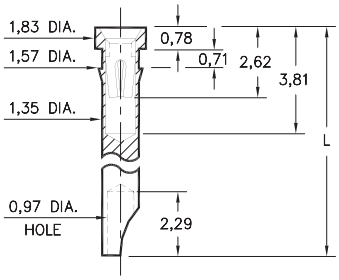

Basic Part Number	Length L
1024-0	7,37
1104-0	11,43

1XX4-0-18-XX-30-XX-10-0
Press-fit in 1,5 mounting hole

0498

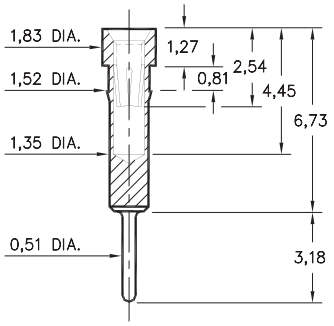

0498-0-15-XX-35-XX-04-0
Press-fit in 1,45 mounting hole

8131

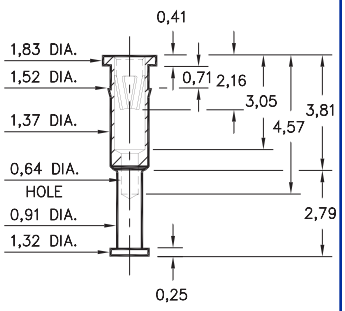

8131-0-15-XX-30-XX-10-0
Press-fit in 1,45 mounting hole

SPECIFICATIONS

SHELL MATERIAL:
Brass Alloy 360, 1/2 Hard

CONTACT MATERIAL:
Beryllium Copper Alloy 172, HT

DIMENSION IN INCHES
TOLERANCES ON:
LENGTHS: ±0,13
DIAMETERS: ±0,05
ANGLES: ± 2°

ORDER CODE: XXXX - X - 1X - XX - XX - XX - XX - 0

BASIC PART #

SPECIFY SHELL FINISH:
01 5,08µm TIN/LEAD OVER NICKEL
80 5,08µm TIN OVER NICKEL ◇
15 0,25µm GOLD OVER NICKEL ◇

SPECIFY CONTACT FINISH:
02 2,54µm TIN/LEAD OVER NICKEL
84 2,54µm TIN OVER NICKEL ◇
27 0,76µm GOLD OVER NICKEL ◇

RoHS 2002/95/EC

SELECT CONTACT
#30 or #35 CONTACT (DATA ON PAGE 218 & 219)

1802/3802/4030/8866

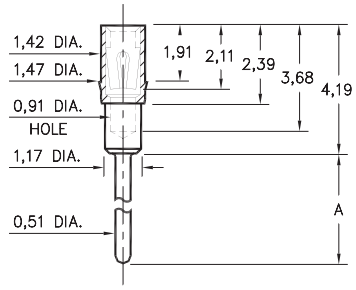

Basic Part Number	Length A
1802-0	3,18
3802-0	4,19
8866-0	19,69
4030-0	20,70

XXXX-0-15-XX-XX-XX-04-0
Press-fit in 1,45 mounting hole

1803/1805

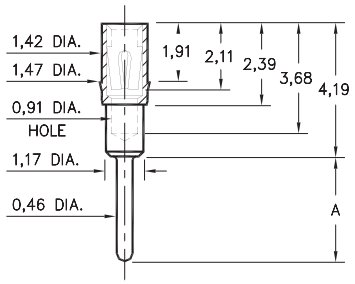

Basic Part Number	Length A
1803-0	3,68
1805-0	5,41

180X-0-15-XX-43-XX-04-0
Press-fit in 1,45 mounting hole

1804/1806

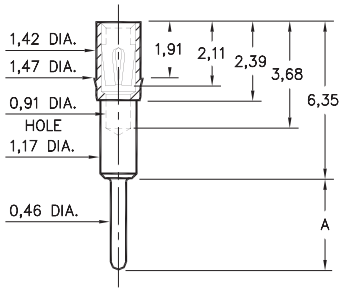

Basic Part Number	Length A
1804-0	2,03
1806-0	2,92

180X-0-15-XX-43-XX-04-0
Press-fit in 1,45 mounting hole

1808

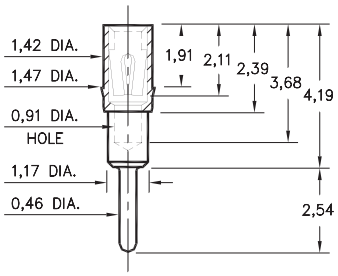

1808-0-15-XX-43-XX-04-0
Press-fit in 1,45 mounting hole

1807

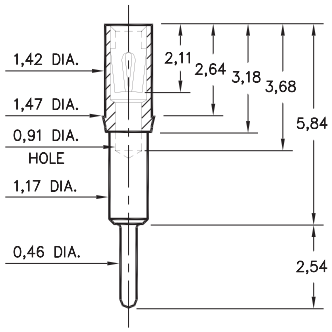

1807-0-15-XX-43-XX-04-0
Press-fit in 1,45 mounting hole

3805

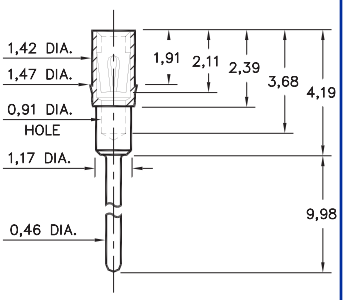

3805-0-15-XX-43-XX-04-0
Press-fit in 1,45 mounting hole

8830

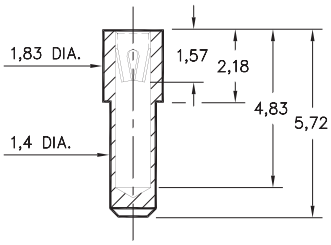

8830-0-15-XX-22-XX-10-0
Solder mount in 1,45 min.
mounting hole

4622

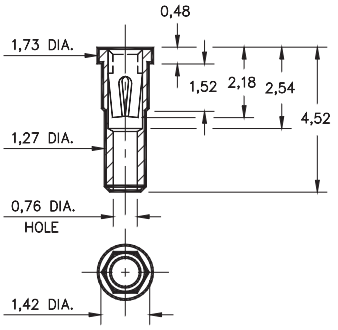

4622-0-15-XX-30-XX-10-0
Hex press-fit in 1,35
plated thru hole

6252

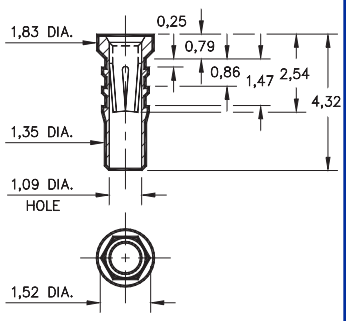

6252-0-15-XX-32-XX-10-0
Hex press-fit in 1,45
plated thru hole

SPECIFICATIONS

SHELL MATERIAL:
Brass Alloy 360, 1/2 Hard

CONTACT MATERIAL:
Beryllium Copper Alloy 172, HT

DIMENSION IN INCHES
TOLERANCES ON:
LENGTHS: ±0,13
DIAMETERS: ±0,05
ANGLES: ± 2°

ORDER CODE: XXXX - 0 - 1X - XX - XX - XX - XX - 0

BASIC PART #

SPECIFY SHELL FINISH:
01 5,08µm TIN/LEAD OVER NICKEL
80 5,08µm TIN OVER NICKEL ◇
15 0,25µm GOLD OVER NICKEL ◇

SPECIFY CONTACT FINISH:
02 2,54µm TIN/LEAD OVER NICKEL
84 2,54µm TIN OVER NICKEL ◇
27 0,76µm GOLD OVER NICKEL ◇

RoHS 2002/95/EC

SELECT CONTACT
#22, #30, #32, or #43 CONTACT (DATA ON PAGE 218, 219 & 220)

PIN RECEPTACLES
for 0,38 - 0,64 diameter pins

0385

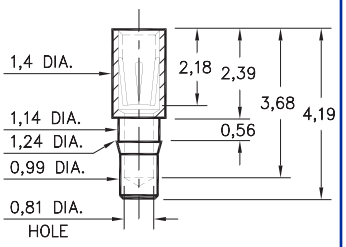

0385-0-15-XX-43-XX-10-0
Press-fit in 1,17 mounting hole

4001

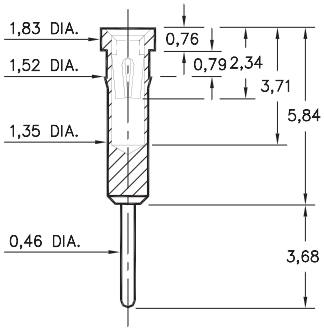

4001-0-15-XX-43-XX-04-0
Press-fit in 1,45 mounting hole

1782

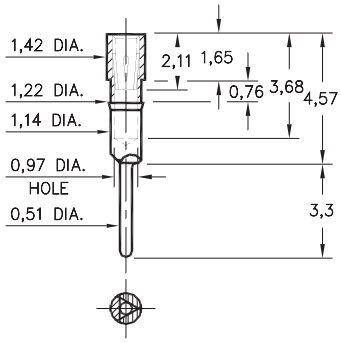

1782-0-15-XX-43-XX-04-0
Press-fit in 1,14 mounting hole

5960

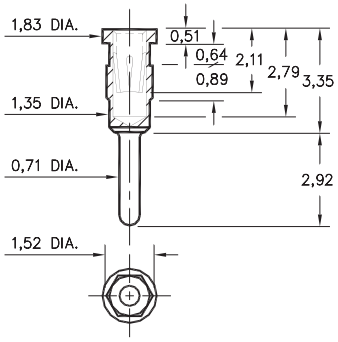

5960-0-15-XX-43-XX-04-0
Hex press-fit in 1,45 plated thru hole

1401/3185

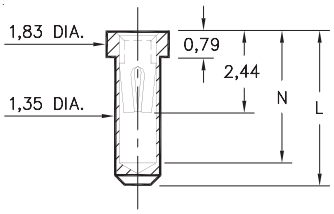

Basic Part Number	Depth N	Length L
1401-0	3,68	4,19
3185-0	2,77	3,30

XXXX-0-15-XX-30-XX-10-0
Solder mount in 1,4 min. mounting hole

4310

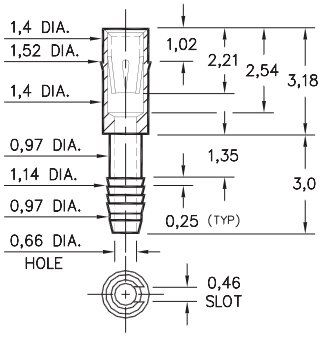

4310-0-31-XX-43-XX-04-0
Compliant press-fit in 1,02±0,08 plated hole. For 2,29→3,30 thick board.

1385

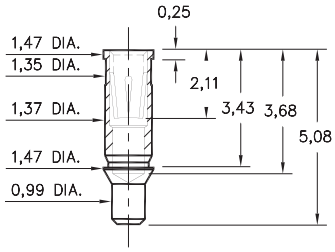

1385-0-15-XX-43-XX-10-0
Surface mount

3018

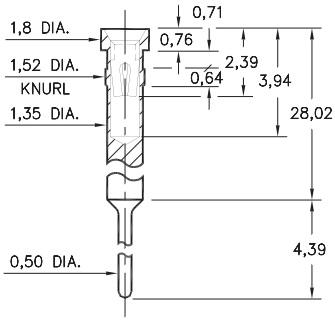

3018-0-15-XX-30-XX-04-0
Press-fit in 1,45 mounting hole

3907

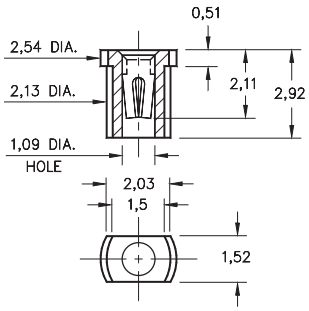

3907-0-18-XX-30-XX-10-0
Surface mount
Also available on 12mm wide carrier tape: 4,000 parts per 330mm reel.
Order as: 3907-0-58-XX-30-XX-10-0

8852

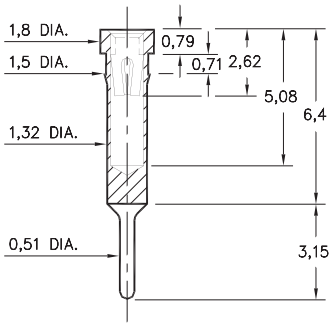

8852-0-15-XX-30-XX-04-0
Press-fit in 1,42 mounting hole

8363

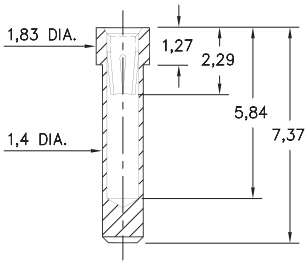

8363-0-15-XX-35-XX-10-0
Solder mount in 1,45 min. mounting hole

SPECIFICATIONS

SHELL MATERIAL:
Brass Alloy 360, 1/2 Hard

CONTACT MATERIAL:
Beryllium Copper Alloy 172, HT

DIMENSION IN INCHES
TOLERANCES ON:
LENGTHS: ±0,13
DIAMETERS: ±0,05
ANGLES: ± 2°

ORDER CODE: XXXX - X - XX - XX - XX - XX - XX - 0

BASIC PART #

SPECIFY SHELL FINISH:
01 5,08µm TIN/LEAD OVER NICKEL
80 5,08µm TIN OVER NICKEL ◇
15 0,25µm GOLD OVER NICKEL ◇

SPECIFY CONTACT FINISH:
02 2,54µm TIN/LEAD OVER NICKEL
84 2,54µm TIN OVER NICKEL ◇
27 0,76µm GOLD OVER NICKEL ◇

RoHS 2002/95/EC

SELECT CONTACT
#30, #35 or #43 CONTACT (DATA ON PAGE 218, 219 & 220)

8964

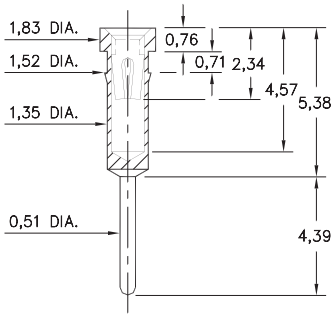

8964-0-15-XX-30-XX-04-0
Press-fit in 1,45 mounting hole

5342

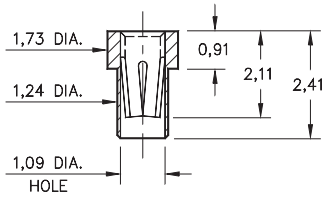

5342-0-15-XX-35-XX-10-0
Solder mount in 1,3 min. mounting hole

8857

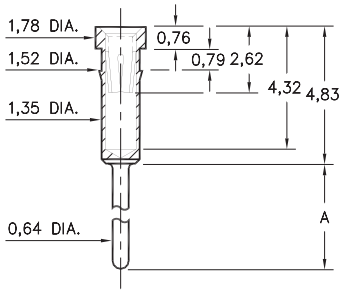

Basic Part Number	Length A
8857-0	7,9
8857-1	11,38
8857-2	14,96
8857-3	18,57
8857-4	22,12

8857-X-15-XX-32-XX-04-0
Press-fit in 1,45 mounting hole

8862/8877

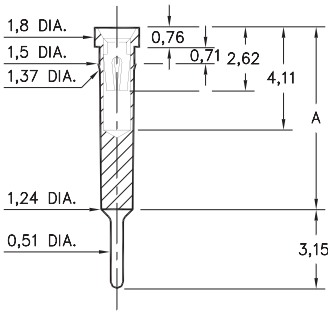

Basic Part Number	Length A
8862-0	7,62
8877-0	8,89

88XX-0-15-XX-30-XX-04-0
Press-fit in 1,42 mounting hole

1334

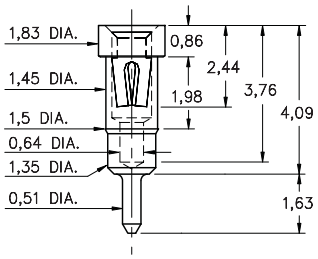

1334-0-15-XX-30-XX-04-0
Press-fit in 1,45 mounting hole

8855

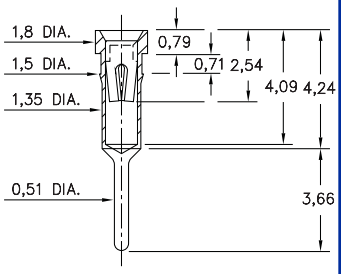

8855-0-15-XX-30-XX-34-0
Press-fit in 1,45 mounting hole

2954

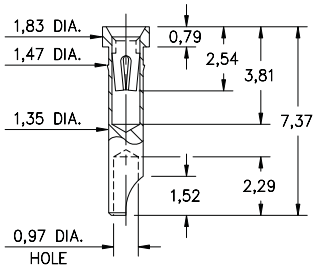

2954-0-18-XX-30-XX-10-0
Press-fit in 1,45 mounting hole

9363

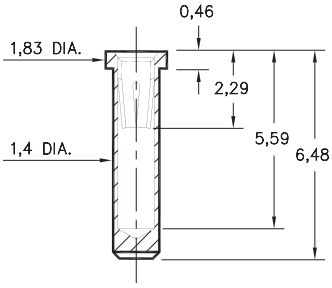

9363-0-15-XX-35-XX-10-0
Solder mount in 1,45 min. mounting hole

1023

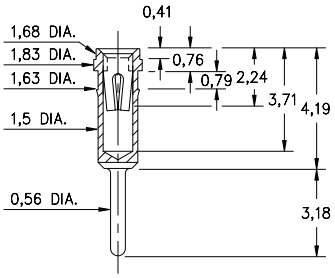

1023-0-15-XX-30-XX-04-0
Press-fit in 1,55 mounting hole

1701

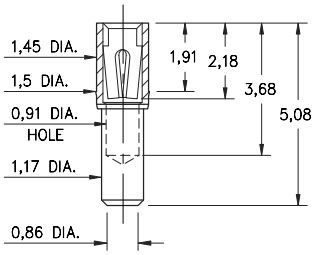

1701-0-15-XX-30-XX-10-0
Press-fit in 1,45 mounting hole

SPECIFICATIONS

SHELL MATERIAL:
Brass Alloy 360, 1/2 Hard

CONTACT MATERIAL:
Beryllium Copper Alloy 172, HT

DIMENSION IN INCHES
TOLERANCES ON:
LENGTHS: ±0,13
DIAMETERS: ±0,05
ANGLES: ± 2°

ORDER CODE: XXXX - X - 15 - XX - XX - XX - XX - 0

BASIC PART #

SPECIFY SHELL FINISH:
01 5,08µm TIN/LEAD OVER NICKEL
80 5,08µm TIN OVER NICKEL ◇
15 0,25µm GOLD OVER NICKEL ◇

SPECIFY CONTACT FINISH:
02 2,54µm TIN/LEAD OVER NICKEL
84 2,54µm TIN OVER NICKEL ◇
27 0,76µm GOLD OVER NICKEL ◇

RoHS 2002/95/EC

SELECT CONTACT
#30, #32 or #35 CONTACT (DATA ON PAGE 218 & 219)

PIN RECEPTACLES
for 0,51 - 0,81 diameter pins

0338

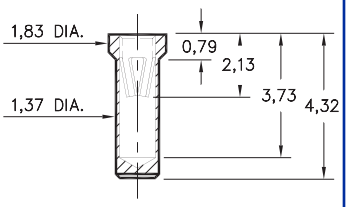

0338-0-15-XX-15-XX-10-0
Solder mount in 1,45 min. mounting hole

0378

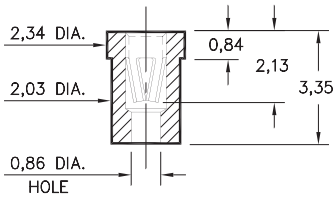

0378-0-15-XX-15-XX-10-0
Solder mount in 2,08 min. mounting hole

6002

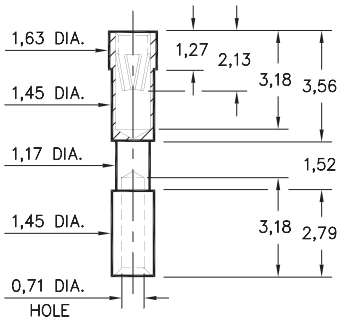

6002-0-19-XX-15-XX-10-0
Solder mount in 1,5 min. mounting hole

7009

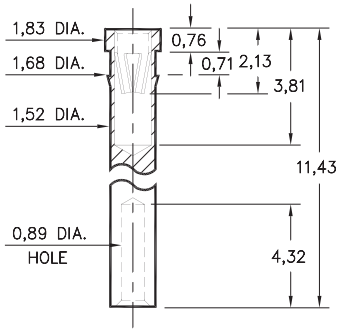

7009-0-19-XX-15-XX-10-0
Press-fit in 1,6 mounting hole

0339

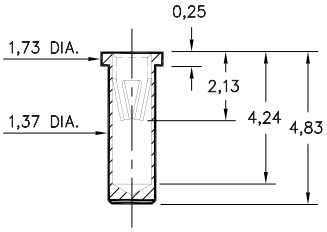

0339-0-15-XX-15-XX-10-0
Solder mount in 1,45 min. mounting hole

SPECIFICATIONS

SHELL MATERIAL:
Brass Alloy 360, 1/2 Hard

CONTACT MATERIAL:
Beryllium Copper Alloy 172, HT

DIMENSION IN INCHES
TOLERANCES ON:
LENGTHS: ±0,13
DIAMETERS: ±0,05
ANGLES: ± 2°

ORDER CODE: XXXX - X - 1X - XX - 15 - XX - 10 - 0

BASIC PART #

SPECIFY SHELL FINISH:
01 5,08µm TIN/LEAD OVER NICKEL
80 5,08µm TIN OVER NICKEL ◇
15 0,25µm GOLD OVER NICKEL ◇

SPECIFY CONTACT FINISH:
01 5,08µm TIN/LEAD OVER NICKEL
80 5,08µm TIN OVER NICKEL ◇
27 0,76µm GOLD OVER NICKEL ◇

RoHS 2002/95/EC

CONTACT
#15 CONTACT (DATA ON PAGE 220)

PIN RECEPTACLES
for 0,56 - 0,81 diameter pins

0295

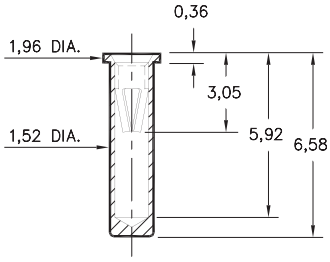

0295-0-15-XX-06-XX-10-0
Solder mount in 1,60 min. mounting hole
Also available on 24mm wide carrier tape: 1,000 parts per 330mm reel.
Order as: 0295-0-57-XX-06-XX-10-0

0292

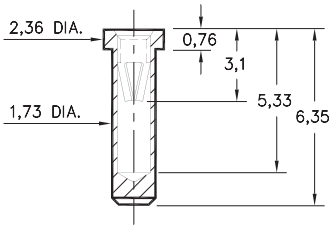

0292-0-15-XX-06-XX-10-0
Solder mount in 1,8 min. mounting hole

0294

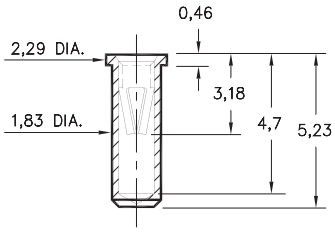

0294-0-15-XX-06-XX-10-0
Solder mount in 1,93 min. mounting hole

0398

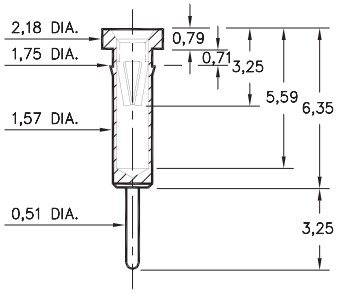

0398-0-15-XX-06-XX-04-0
Press-fit in 1,68 mounting hole

0397

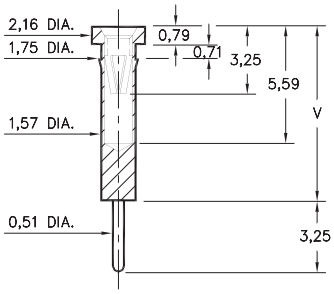

Basic Part Number	Length V
0397-0	8,97
0397-1	8,46
0397-2	10,49

0397-X-15-XX-06-XX-04-0
Press-fit in 1,68 mounting hole

0297

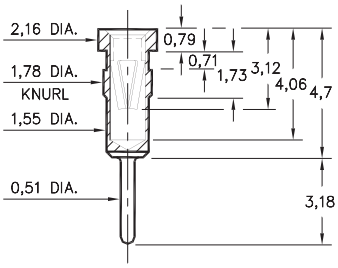

0297-0-15-XX-06-XX-04-0
Press-fit in 1,7 mounting hole

9019/9039

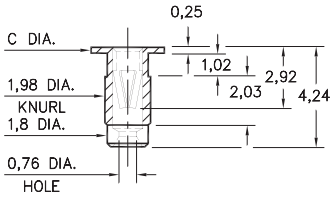

Basic Part Number	Head Dia. C
9019-0	3,18
9039-0	2,54

90X9-X-19-XX-06-XX-10-0
Press-fit in 1,91 mounting hole

SPECIFICATIONS

SHELL MATERIAL:
Brass Alloy 360, 1/2 Hard

CONTACT MATERIAL:
Beryllium Copper Alloy 172, HT

DIMENSION IN INCHES
TOLERANCES ON:
LENGTHS: ±0,13
DIAMETERS: ±0,05
ANGLES: ± 2°

ORDER CODE: XXXX - X - 1X - XX - 06 - XX - XX - 0

BASIC PART #

SPECIFY SHELL FINISH:
01 5,08µm TIN/LEAD OVER NICKEL
80 5,08µm TIN OVER NICKEL ◇
15 0,25µm GOLD OVER NICKEL ◇

SPECIFY CONTACT FINISH:
01 5,08µm TIN/LEAD OVER NICKEL
80 5,08µm TIN OVER NICKEL ◇
27 0,76µm GOLD OVER NICKEL ◇

RoHS 2002/95/EC

CONTACT
#06 CONTACT (DATA ON PAGE 220)

0326

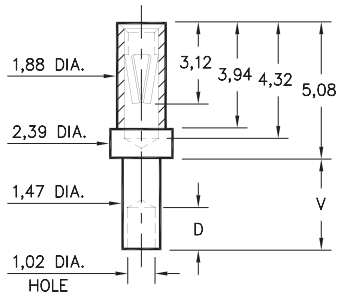

Basic Part Number	Board Thick-ness	Length V	Depth D
0326-1	0,79	1,57	1,02
0326-2	1,57	2,39	1,57
0326-3	2,39	3,18	1,57
0326-4	3,18	3,96	1,57

0326-X-19-XX-06-XX-10-0
Swage mount in 1,52 hole

5295

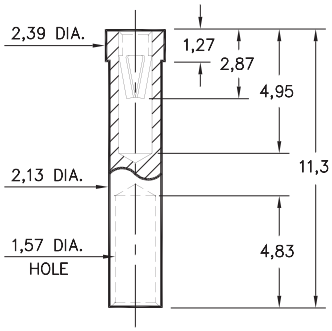

5295-0-19-XX-06-XX-10-0
Solder mount in 2,18 min. mounting hole

0396

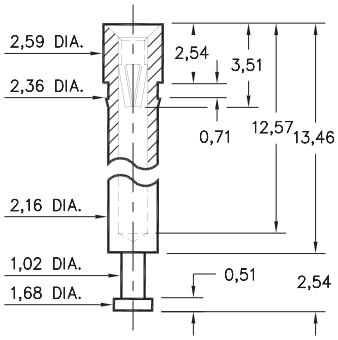

0396-0-15-XX-06-XX-10-0
Press-fit in 2,29 mounting hole

0298

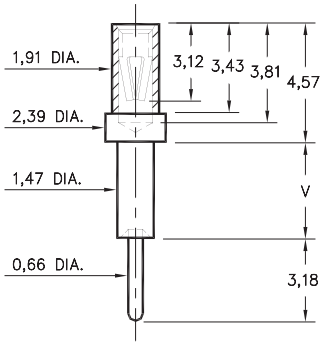

Basic Part Number	Board Thick-ness	Length V
0298-1	0,79	1,3
0298-2	1,57	2,08
0298-3	2,39	2,87
0298-4	3,18	3,68

0298-X-15-XX-06-XX-10-0
Swage mount in 1,52 hole

9293

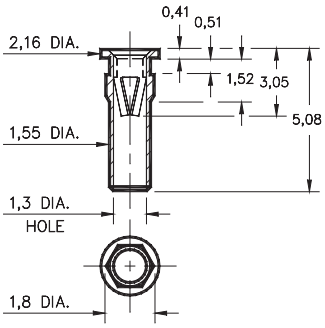

9293-0-15-XX-06-XX-10-0
Hex press-fit in 1,7 plated thru hole

8864

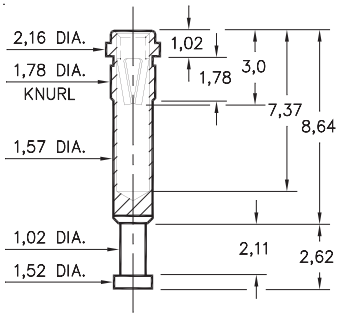

8864-0-15-XX-06-XX-10-0
Press-fit in 1,7 mounting hole

0664

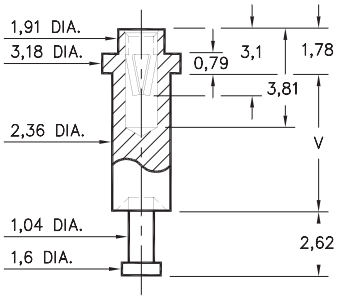

Basic Part Number	Board Thick-nees	Length V
0664-1	2,39	3,18
0664-2	3,18	3,96
0664-3	4,78	5,56

0664-X-15-XX-06-XX-10-0
Swage mount in 2,44 hole

SPECIFICATIONS

SHELL MATERIAL:
Brass Alloy 360, 1/2 Hard

CONTACT MATERIAL:
Beryllium Copper Alloy 172, HT

DIMENSION IN INCHES
TOLERANCES ON:
LENGTHS: ±0,13
DIAMETERS: ±0,05
ANGLES: ± 2°

ORDER CODE: XXXX - X - 1X - XX - 06 - XX - 10 - 0

BASIC PART #

SPECIFY SHELL FINISH:
01 5,08µm TIN/LEAD OVER NICKEL
80 5,08µm TIN OVER NICKEL ◇
15 0,25µm GOLD OVER NICKEL ◇

SPECIFY CONTACT FINISH:
01 5,08µm TIN/LEAD OVER NICKEL
80 5,08µm TIN OVER NICKEL ◇
27 0,76µm GOLD OVER NICKEL ◇

RoHS 2002/95/EC

CONTACT
#06 CONTACT (DATA ON PAGE 220)

PIN RECEPTACLES
for 0,56 - 0,86 diameter pins and 0,64 square pins

0291

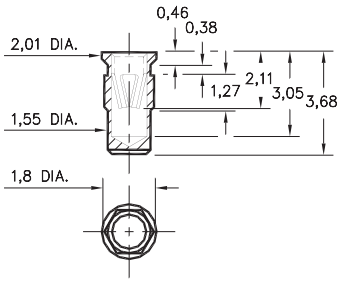

0291-0-15-XX-16-XX-10-0
Hex press-fit in 1,7 plated thru hole

0293

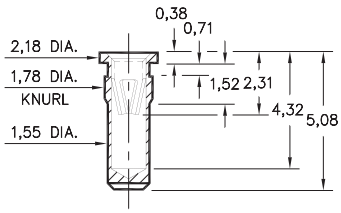

0293-0-15-XX-16-XX-10-0
Press-fit in 1,7 mounting hole

0287

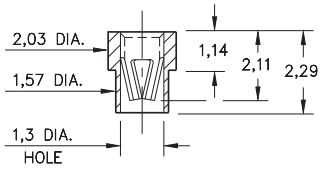

0287-0-15-XX-16-XX-10-0
Solder mount in 1,65 min. mounting hole
Also available on 8mm wide carrier tape: 3,250 parts per 330mm reel.
Order as: 0287-0-57-XX-16-XX-10-0

0285

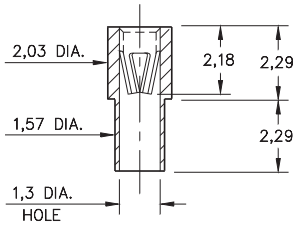

0285-0-15-XX-16-XX-10-0
Solder mount in 1,65 min. mounting hole

0284

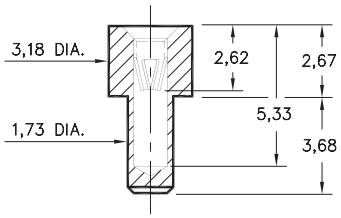

0284-0-15-XX-16-XX-10-0
Solder mount in 1,78 min. mounting hole

8114

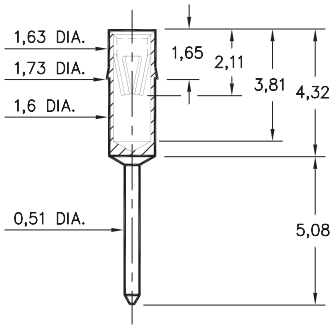

8114-0-15-XX-16-XX-04-0
Press-fit from underside of pc board into 1,65 mounting hole

0407

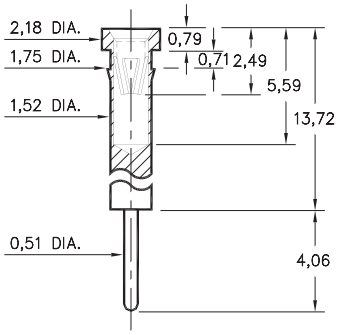

0407-0-15-XX-16-XX-04-0
Press-fit in 1,68 mounting hole

0415

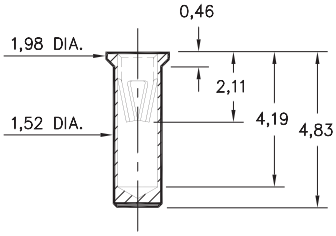

0415-0-15-XX-16-XX-10-0
Solder mount in 1,6 min. mounting hole
Also available on 24mm wide carrier tape: 1,500 parts per 330mm reel.
Order as: 0415-0-57-XX-16-XX-10-0

0303

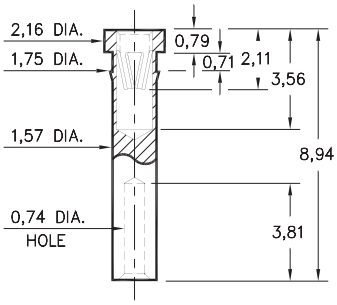

0303-0-19-XX-16-XX-10-0
Wire Termination
Press-fit in 1,70 mounting hole

0306

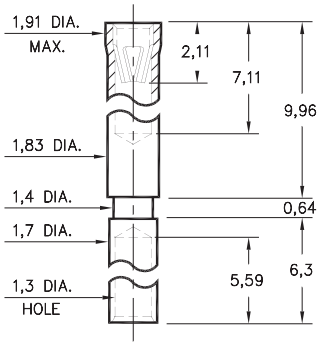

0306-0-19-XX-16-XX-10-0
Wire Termination
#18 gage crimp barrel

0273

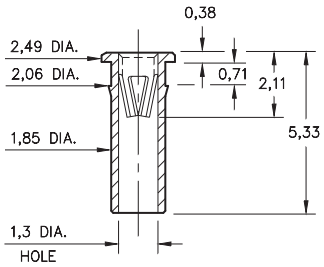

0273-0-15-XX-16-XX-10-0
Press-fit in 1,98 mounting hole

7520

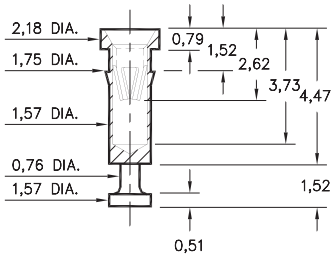

7520-0-15-XX-16-XX-10-0
Press-fit in 1,68 mounting hole

SPECIFICATIONS

SHELL MATERIAL:
Brass Alloy 360, 1/2 Hard

CONTACT MATERIAL:
Beryllium Copper Alloy 172, HT

DIMENSION IN INCHES
TOLERANCES ON:
LENGTHS: ±0,13
DIAMETERS: ±0,05
ANGLES: ± 2°

ORDER CODE: XXXX - X - 1X - XX - 16 - XX - XX - 0

BASIC PART #

SPECIFY SHELL FINISH:
01 5,08µm TIN/LEAD OVER NICKEL
80 5,08µm TIN OVER NICKEL ◇
15 0,25µm GOLD OVER NICKEL ◇

SPECIFY CONTACT FINISH:
01 5,08µm TIN/LEAD OVER NICKEL
80 5,08µm TIN OVER NICKEL ◇
27 0,76µm GOLD OVER NICKEL ◇

RoHS 2002/95/EC

CONTACT
#16 CONTACT (DATA ON PAGE 221)

PIN RECEPTACLES
for 0,56 - 0,86 diameter pins and 0,64 square pins

9808

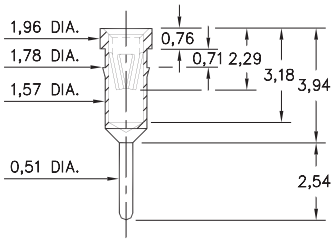

9808-0-15-XX-16-XX-04-0
Press-fit in 1,70 mounting hole

9101

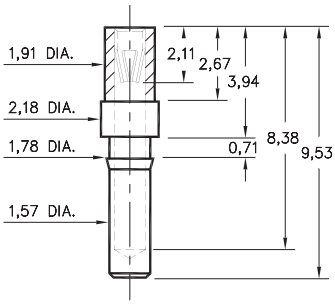

9101-0-15-XX-16-XX-10-0
Press-fit in 1,70 mounting hole

5650

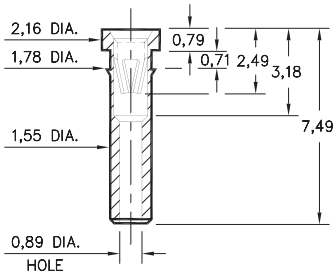

5650-0-19-XX-16-XX-10-0
Press-fit in 1,70 mounting hole

8679

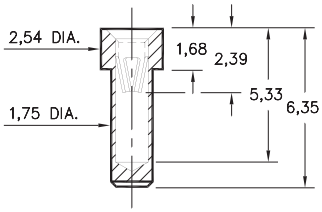

8679-0-15-XX-16-XX-10-0
Solder mount in 1,80 min. mounting hole

8827

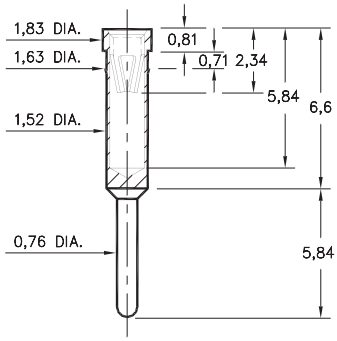

8827-0-15-XX-16-XX-04-0
Press-fit in 1,55 mounting hole

6021

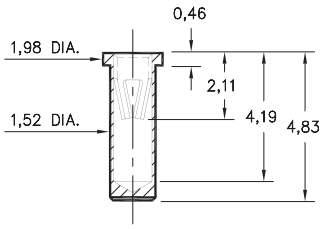

6021-0-15-XX-16-XX-10-0
Solder mount in 1,57 min. mounting hole

1873

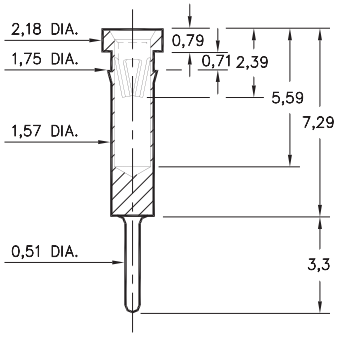

1873-0-15-XX-16-XX-04-0
Press-fit in 1,68 mounting hole

SPECIFICATIONS

SHELL MATERIAL:
Brass Alloy 360, 1/2 Hard

CONTACT MATERIAL:
Beryllium Copper Alloy 172, HT

DIMENSION IN INCHES
TOLERANCES ON:
LENGTHS: ±0,13
DIAMETERS: ±0,05
ANGLES: ± 2°

ORDER CODE: XXXX - X - 15 - XX - 16 - XX - XX - 0

BASIC PART #

SPECIFY SHELL FINISH:
01 5,08µm TIN/LEAD OVER NICKEL
80 5,08µm TIN OVER NICKEL ◇
15 0,25µm GOLD OVER NICKEL ◇

SPECIFY CONTACT FINISH:
01 5,08µm TIN/LEAD OVER NICKEL
80 5,08µm TIN OVER NICKEL ◇
27 0,76µm GOLD OVER NICKEL ◇

RoHS 2002/95/EC

CONTACT
#16 CONTACT (DATA ON PAGE 221)

PIN RECEPTACLES
for 0,64 - 0,94 diameter pins and 0,64 square pins

0305

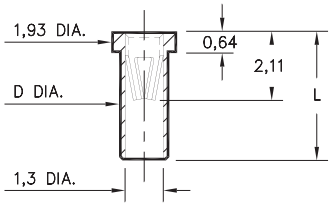

Basic Part Number	Length L	Dia. D
0305-0	2,41	1,42
0305-1	2,67	1,47
0305-2	3,94	1,47

0305-X-15-XX-47-XX-10-0
Solder mount in 1,5/1,55 mounting hole
Also available on 24mm wide carrier tape: 1,500 parts per 330mm reel.
Order as: 0305-2-57-XX-47-XX-10-0

0279

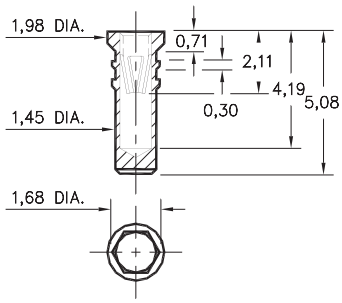

0279-0-15-XX-47-XX-10-0
Hex press-fit in 1,57 plated thru hole

0330

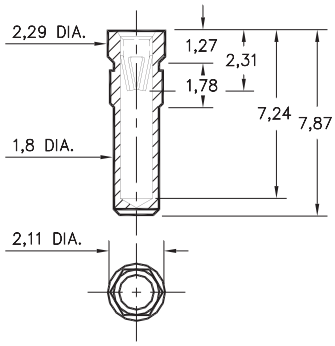

0330-0-15-XX-47-XX-10-0
Hex press-fit in 2,01 plated thru hole

0300/8300

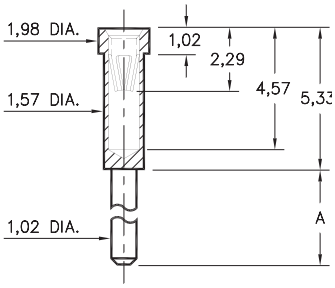

Basic Part Number	Length A
0300-1	2,79
0300-2	4,75
8300-0	3,56

X300-X-15-XX-47-XX-10-0
Solder mount in 1,07 min. mounting hole

0301

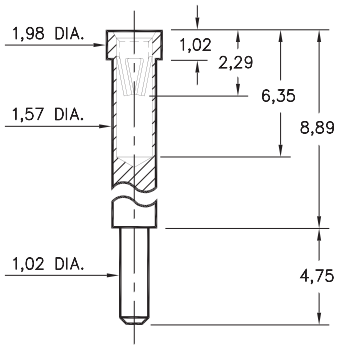

0301-1-15-XX-47-XX-10-0
Solder mount in 1,07 min. mounting hole

0309

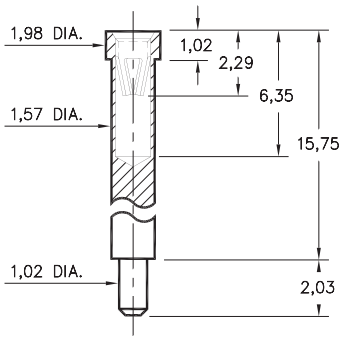

0309-2-15-XX-47-XX-10-0
Solder mount in 1,07 min. mounting hole

0399

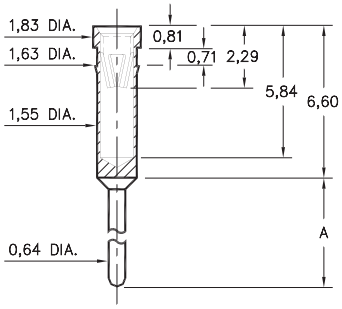

Basic Part Number	Length A
0399-0	5,84
0399-1	4,57

0399-X-15-XX-47-XX-04-0
Press-fit in 1,55 mounting hole

1304

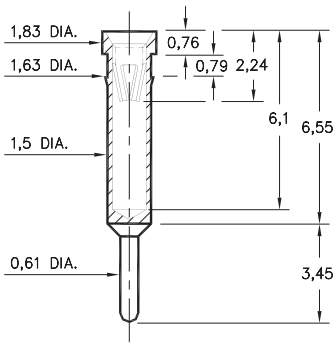

1304-0-15-XX-47-XX-04-0
Press-fit in 1,55 mounting hole

SPECIFICATIONS

SHELL MATERIAL:
Brass Alloy 360, 1/2 Hard

CONTACT MATERIAL:
Beryllium Copper Alloy 172, HT

DIMENSION IN INCHES
TOLERANCES ON:
LENGTHS: ±0,13
DIAMETERS: ±0,05
ANGLES: ± 2°

ORDER CODE: XXXX - X - 15 - XX - 47 - XX - XX - 0

BASIC PART #

SPECIFY SHELL FINISH:
01 5,08µm TIN/LEAD OVER NICKEL
80 5,08µm TIN OVER NICKEL ◇
15 0,25µm GOLD OVER NICKEL ◇

SPECIFY CONTACT FINISH:
01 5,08µm TIN/LEAD OVER NICKEL
80 5,08µm TIN OVER NICKEL ◇
27 0,76µm GOLD OVER NICKEL ◇

RoHS 2002/95/EC

CONTACT
#47 CONTACT (DATA ON PAGE 221)

PIN RECEPTACLES
for 0,64 - 0,94 diameter pins and 0,64 square pins

1305

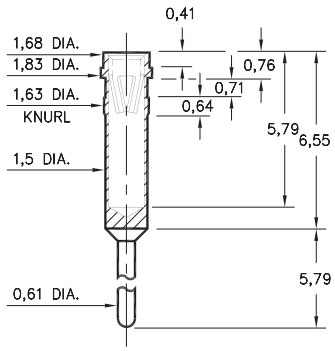

1305-0-15-XX-47-XX-04-0
Press-fit in 1,55 mounting hole

1306

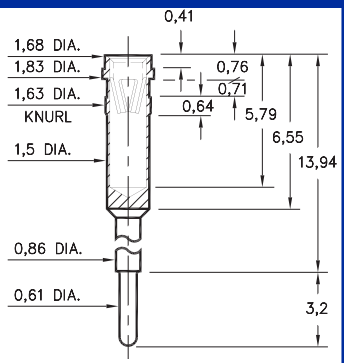

1306-0-15-XX-47-XX-04-0
Press-fit in 1,55 mounting hole.

7305

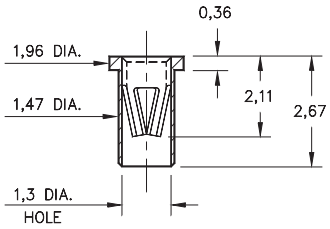

7305-0-15-XX-47-XX-10-0
Solder mount in 1,52 min. mounting hole.

0400

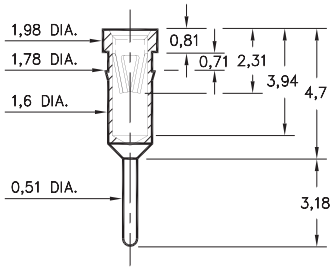

0400-0-15-XX-47-XX-04-0
Press-fit in 1,7 mounting hole.

0335

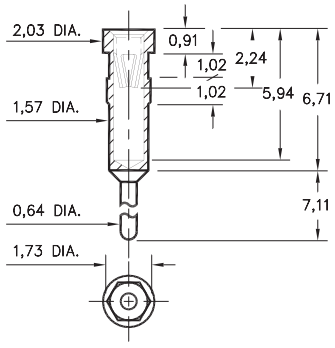

0335-0-15-XX-47-XX-04-0
Hex press-fit in .1,63
plated thru hole

4614

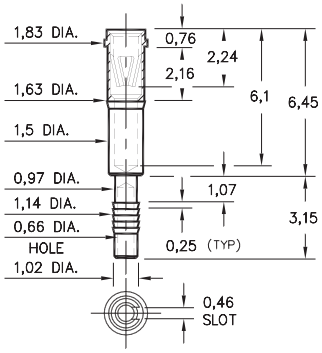

4614-0-31-XX-47-XX-04-0
Compliant press-fit in 1,02±0,08 plated hole. For 1,52→2,54 thick board.

4615

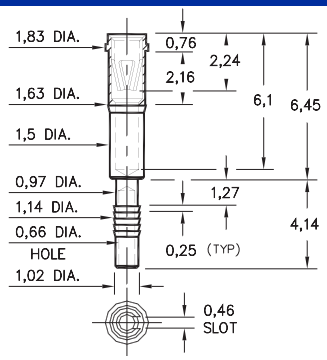

4615-0-31-XX-47-XX-04-0
Compliant press-fit in 1,02±0,08 plated hole. For 2,29→3,30 thick board.

7614

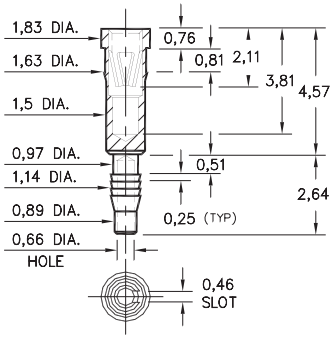

7614-0-31-XX-47-XX-04-0
Compliant press-fit in 1,02±0,08 plated hole. For 1,52→2,54 thick board.

8401

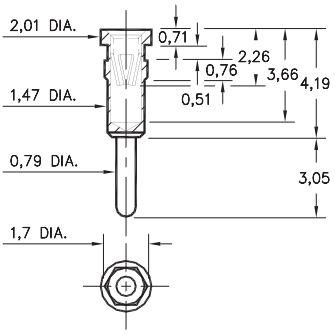

8401-0-15-XX-47-XX-04-0
Hex press-fit in 1,6
plated thru hole

2400

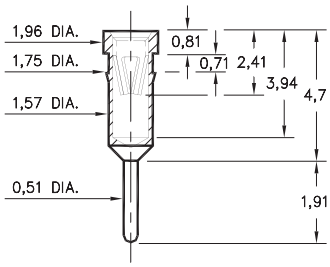

2400-0-15-XX-47-XX-04-0
Press-fit in 1,68 mounting hole.

6857

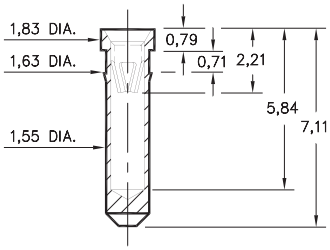

6857-0-15-XX-47-XX-10-0
Press-fit in 1,55 mounting hole.

9393

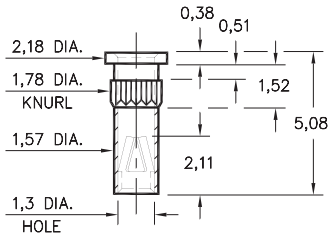

9393-0-15-XX-47-XX-10-0
Press-fit in 1,70 mounting hole.

SPECIFICATIONS

SHELL MATERIAL:
Brass Alloy 360, 1/2 Hard

CONTACT MATERIAL:
Beryllium Copper Alloy 172, HT

DIMENSION IN INCHES
TOLERANCES ON:
LENGTHS: ±0,13
DIAMETERS: ±0,05
ANGLES: ± 2°

ORDER CODE: XXXX - X - 15 - XX - 47 - XX - XX - 0

BASIC PART #

SPECIFY SHELL FINISH:
01 5,08µm TIN/LEAD OVER NICKEL
80 5,08µm TIN OVER NICKEL ◇
15 0,25µm GOLD OVER NICKEL ◇

SPECIFY CONTACT FINISH:
01 5,08µm TIN/LEAD OVER NICKEL
80 5,08µm TIN OVER NICKEL ◇
27 0,76µm GOLD OVER NICKEL ◇

RoHS 2002/95/EC

CONTACT
#47 CONTACT (DATA ON PAGE 221)

PIN RECEPTACLES
for 0,64 - 0,94 diameter pins and 0,64 square pins

0401/6401

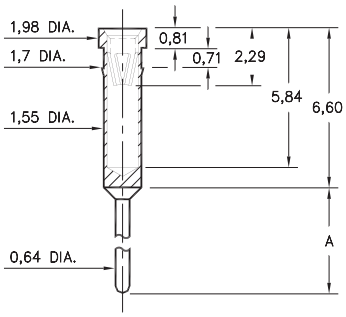

Basic Part Number	Length A
0401-0	8,64
6401-0	13,72

X401-0-15-XX-47-XX-04-0
Press-fit in 1,63 mounting hole

1303/8303

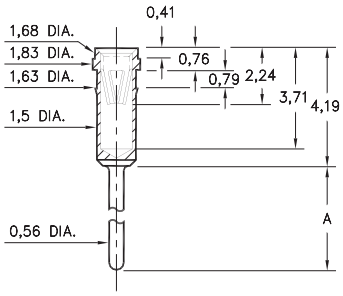

Basic Part Number	Length A
1303-0	3,18
8303-0	20,3

X303-0-15-XX-47-XX-04-0
Press-fit in 1,55 mounting hole

4095

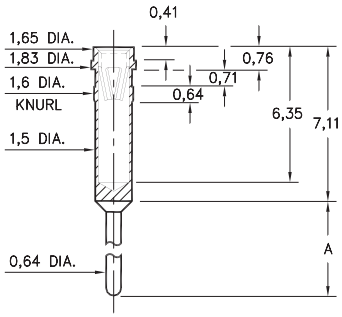

Basic Part Number	Length A
4095-0	16,13

409X-0-15-XX-47-XX-04-0
Press-fit in 1,55 mounting hole

8806

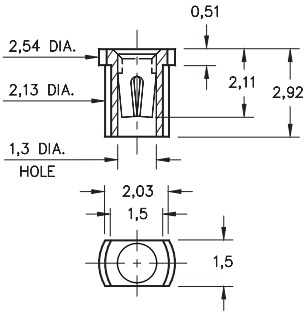

8806-0-18-XX-47-XX-40-0
Surface mount
Also available on 12mm wide carrier tape: 4,000 parts per 330mm reel.
Order as: 8806-0-58-XX-47-XX-40-0

SPECIFICATIONS

SHELL MATERIAL:
Brass Alloy 360, 1/2 Hard

CONTACT MATERIAL:
Beryllium Copper Alloy 172, HT

DIMENSION IN INCHES
TOLERANCES ON:
LENGTHS: ±0,13
DIAMETERS: ±0,05
ANGLES: ± 2°

ORDER CODE: XXXX - X - 15 - XX - 47 - XX - XX - 0

BASIC PART #

SPECIFY SHELL FINISH:
01 5,08µm TIN/LEAD OVER NICKEL
80 5,08µm TIN OVER NICKEL ◇
15 0,25µm GOLD OVER NICKEL ◇

SPECIFY CONTACT FINISH:
01 5,08µm TIN/LEAD OVER NICKEL
80 5,08µm TIN OVER NICKEL ◇
27 0,76µm GOLD OVER NICKEL ◇

RoHS 2002/95/EC

CONTACT
#47 CONTACT (DATA ON PAGE 221)

0331/9353

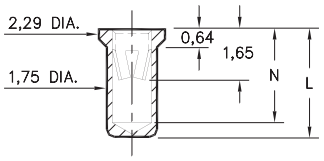

Basic Part Number	Length L	Depth N
0331-0	3,81	3,23
9353-0	4,32	3,73

X3XX-X-15-XX-18-XX-10-0
Solder mount in 1,80 min. mounting hole

7405

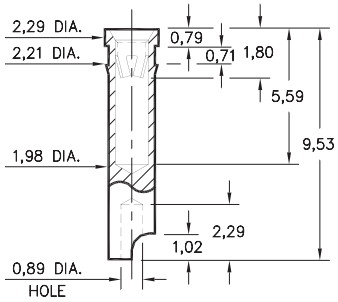

7405-0-18-XX-18-XX-10-0
Press-fit in 2,13 mounting hole

3450

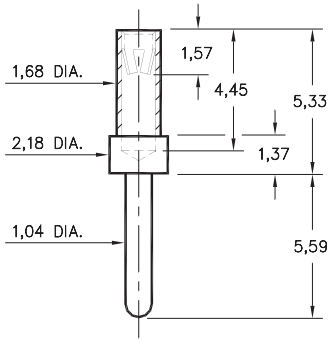

3450-0-15-XX-18-XX-04-0
Solder mount in 1,09 min. mounting hole

9354/7406

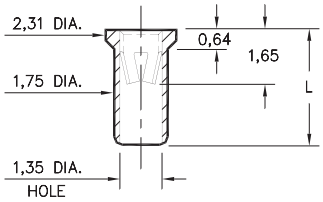

Basic Part Number	Length L
7406-0	3,05
9354-0	4,32

XXXX-0-15-XX-18-XX-10-0
Solder mount in 1,80 min. mounting hole

0319

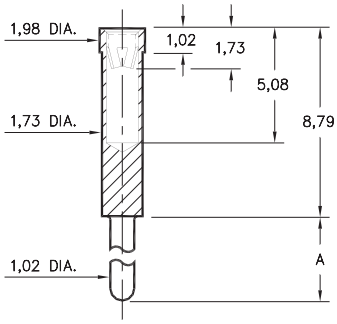

Basic Part Number	Length A
0319-0	6,1
0319-1	7,11

0319-X-15-XX-18-XX-04-0
Solder mount in 1,07 min. mounting hole

1313

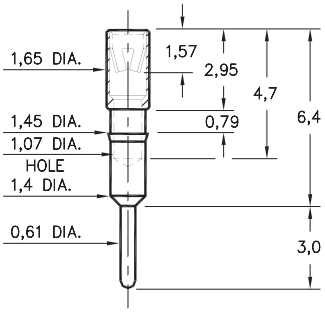

1313-0-15-XX-18-XX-04-0
Press-fit in 1,42 mounting hole

6628

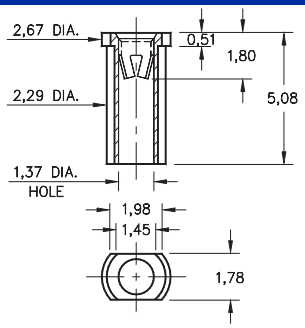

6628-0-18-XX-18-XX-10-0
Surface mount
Also available on 12mm wide carrier tape: 3,700 parts per 330mm reel.
Order as: 6628-0-58-XX-18-XX-10-0

3520

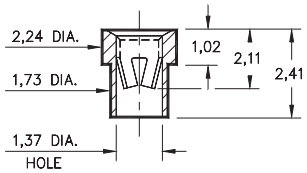

3520-0-15-XX-18-XX-10-0
Solder mount in 1,78 min. mounting hole

8331

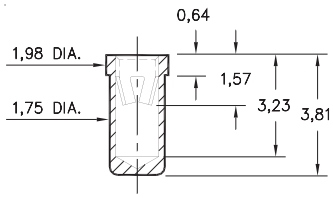

8331-0-15-XX-18-XX-10-0
Solder mount in 1,80 min. mounting hole

SPECIFICATIONS

SHELL MATERIAL:
Brass Alloy 360, 1/2 Hard

CONTACT MATERIAL:
Beryllium Copper Alloy 172, HT

DIMENSION IN INCHES
TOLERANCES ON:
LENGTHS: ±0,13
DIAMETERS: ±0,05
ANGLES: ± 2°

ORDER CODE: XXXX - X - 1X - XX - 18 - XX - XX - 0

BASIC PART #

SPECIFY SHELL FINISH:
01 5,08µm TIN/LEAD OVER NICKEL
80 5,08µm TIN OVER NICKEL ◇
15 0,25µm GOLD OVER NICKEL ◇

SPECIFY CONTACT FINISH:
01 5,08µm TIN/LEAD OVER NICKEL
80 5,08µm TIN OVER NICKEL ◇
27 0,76µm GOLD OVER NICKEL ◇

RoHS 2002/95/EC

CONTACT
#18 CONTACT (DATA ON PAGE 222)

0344

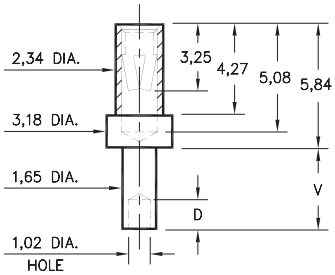

Basic Part Number	Board Thick-ness	Length V	Depth D
0344-1	0,78	1,57	1,02
0344-2	1,57	2,39	1,57
0344-3	2,39	3,18	1,57
0344-4	3,18	3,96	1,57

0344-X-19-XX-34-XX-10-0
Swage mount in 1,70 hole

0349

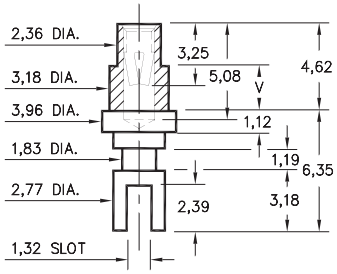

Basic Part Number	Board Thickness	Length V
0349-2	1,57	2,39
0349-3	2,39	3,18
0349-4	3,18	3,96

0349-X-31-XX-34-XX-10-0
Swage mount in 3,28 hole

0323/0324

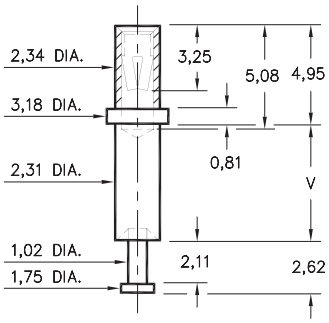

0323-X-15-XX-34-XX-10-0
Swage mount in 2,39 hole

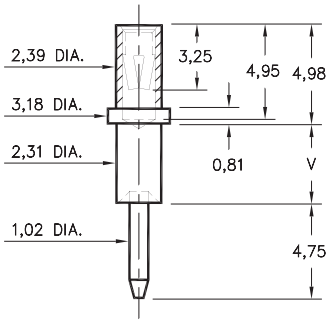

0324-X-15-XX-34-XX-10-0
Swage mount in 2,39 hole

Basic Part Number	Board Thickness	Length V
032X-1	0,79	1,57
032X-2	1,57	2,39
032X-3	2,39	3,18
032X-4	3,18	3,96
032X-5	4,78	5,56

0348

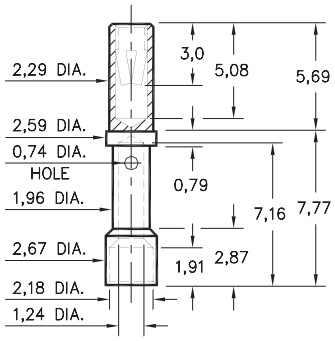

0348-0-33-XX-34-XX-10-0
#20A Crimp Barrel

0405

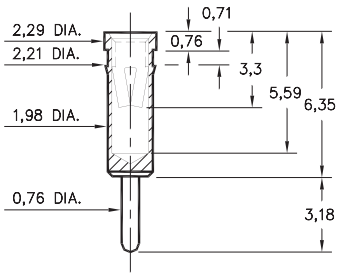

0405-0-15-XX-34-XX-04-0
Press-fit in 2,13 mounting hole

0336

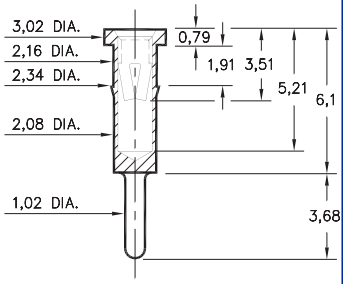

0336-0-15-XX-34-XX-04-0
Press-fit in 2,26 mounting hole

0322

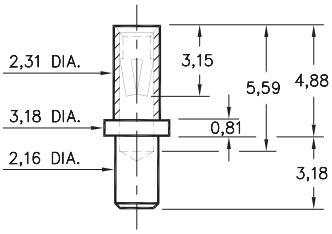

0322-0-15-XX-34-XX-10-0
Solder mount in 2,26 min. mounting hole

0325

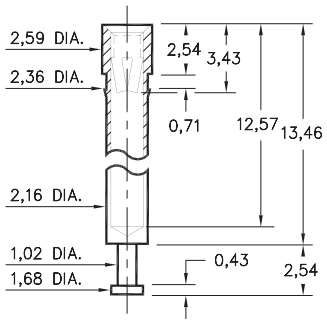

0325-0-15-XX-34-XX-10-0
Press-fit in 2,29 mounting hole

SPECIFICATIONS

SHELL MATERIAL:
Brass Alloy 360, 1/2 Hard

CONTACT MATERIAL:
Beryllium Copper Alloy 172, HT

DIMENSION IN INCHES
TOLERANCES ON:
LENGTHS: ±0,13
DIAMETERS: ±0,05
ANGLES: ± 2°

ORDER CODE: XXXX - X - XX - XX - 34 - XX - XX - 0

BASIC PART #

SPECIFY SHELL FINISH:
01 5,08µm TIN/LEAD OVER NICKEL
80 5,08µm TIN OVER NICKEL ◇
15 0,25µmGOLD OVER NICKEL ◇

SPECIFY CONTACT FINISH:
01 5,08µm TIN/LEAD OVER NICKEL
80 5,08µm TIN OVER NICKEL ◇
27 30µm GOLD OVER NICKEL ◇

RoHS 2002/95/EC

CONTACT
#34 CONTACT (DATA ON PAGE 222)

0327/0351/0373

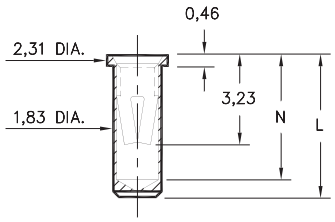

Basic Part Number	Length L	Depth N
0327-0	5,23	4,57
0351-0	5,74	5,08
0373-0	6,86	6,12

03XX-0-15-XX-34-XX-10-0
Solder mount in 1,91 min. mounting hole

0328

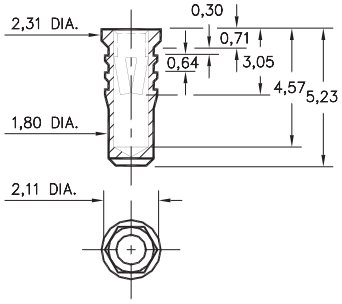

0328-0-15-XX-34-XX-10-0
Hex press-fit in 2,01 plated thru hole

0334

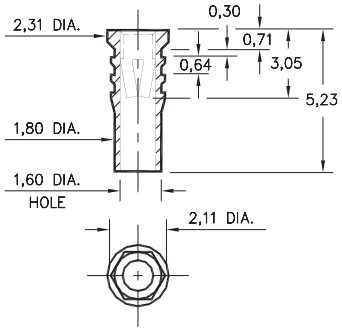

0334-0-15-XX-34-XX-10-0
Hex press-fit in 2,01 plated thru hole

0312

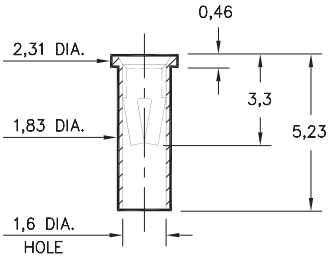

0312-0-15-XX-34-XX-10-0
Solder mount in 1,91 min. mounting hole

0333

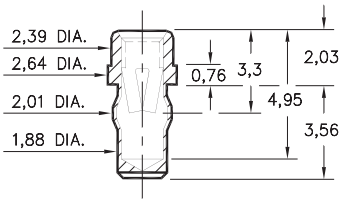

0333-0-42-XX-34-XX-10-0
Press-fit in 1,93 mounting hole

0357

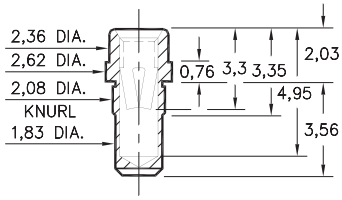

0357-0-15-XX-34-XX-10-0
Press-fit in 1,98 mounting hole

0317

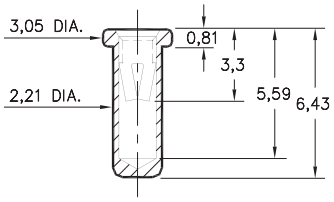

0317-0-15-XX-34-XX-10-0
Solder mount in 2,31 min. mounting hole

0340

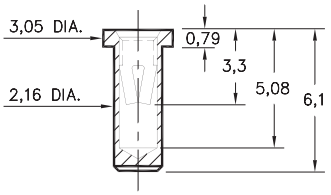

0340-0-15-XX-34-XX-10-0
Solder mount in 2,21 min. mounting hole

0345

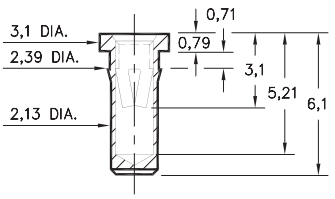

0345-0-15-XX-34-XX-10-0
Press-fit in 2,26 mounting hole

0316

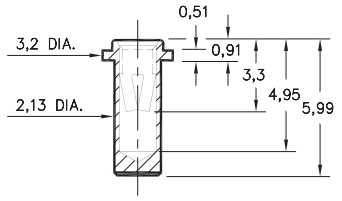

0316-0-15-XX-34-XX-10-0
Solder mount in 2,21 min. mounting hole

0314

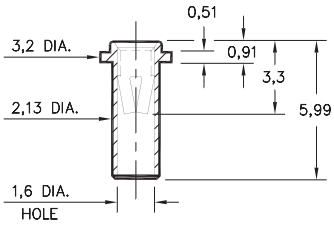

0314-0-15-XX-34-XX-10-0
Solder mount in 2,21 min. mounting hole

SPECIFICATIONS

SHELL MATERIAL:
Brass Alloy 360, 1/2 Hard

CONTACT MATERIAL:
Beryllium Copper Alloy 172, HT

DIMENSION IN INCHES
TOLERANCES ON:
LENGTHS: ±0,13
DIAMETERS: ±.0,05
ANGLES: ± 2°

ORDER CODE: XXXX - X - XX - XX - 34 - XX - 10 - 0

BASIC PART #

SPECIFY SHELL FINISH:
01 5,08µm TIN/LEAD OVER NICKEL
80 5,08µm TIN OVER NICKEL ◇
15 0,25µm GOLD OVER NICKEL ◇

SPECIFY CONTACT FINISH:
01 5,08µm TIN/LEAD OVER NICKEL
80 5,08µm TIN OVER NICKEL ◇
27 0,76µm GOLD OVER NICKEL ◇

RoHS 2002/95/EC

CONTACT
#34 CONTACT (DATA ON PAGE 222)

PIN RECEPTACLES
for 0,81 - 1,17 diameter pins

0359

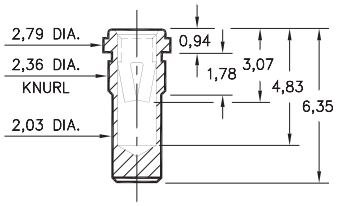

0359-0-15-XX-34-XX-10-0
Press-fit in 2,29 mounting hole

0358

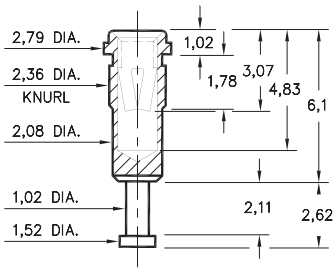

0358-0-15-XX-34-XX-10-0
Press-fit in 2,29 mounting hole

0360

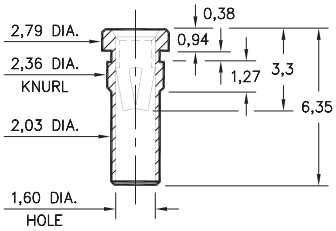

0360-0-15-XX-34-XX-10-0
Press-fit in 2,29 mounting hole

0343

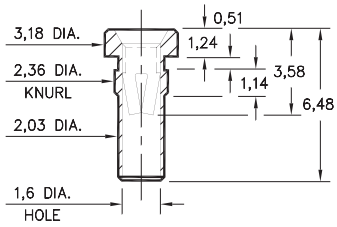

0343-0-15-XX-34-XX-10-0
Press-fit in 2,29 mounting hole

0356

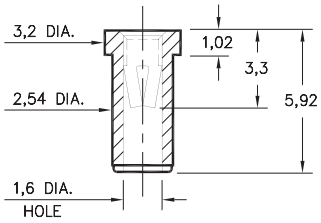

0356-0-15-XX-34-XX-10-0
Solder mount in 2,59 min. mounting hole

6659

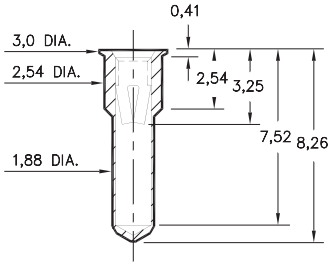

6659-0-15-XX-34-XX-10-0
Solder mount in 2,59 min. mounting hole

0347

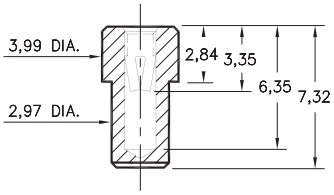

0347-0-15-XX-34-XX-10-0
Solder mount in 3,05 min. mounting hole

0329

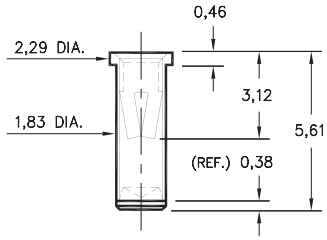

0329-0-15-XX-34-XX-10-0
Solder mount in 1,91 min. mounting hole. "knock out" bottom.

0814

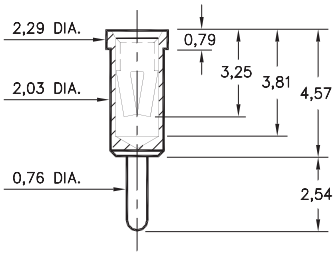

0814-0-15-XX-34-XX-04-0
Solder mount in 2,08 min. mounting hole

5059

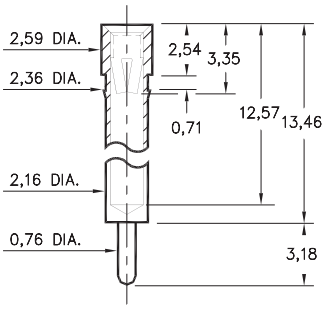

5059-0-15-XX-34-XX-04-0
Press-fit in 2,29 mounting hole

8360

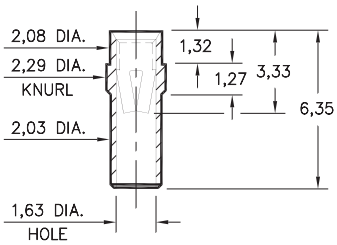

8360-0-15-XX-34-XX-10-0
Press-fit in 2,21 mounting hole

9359

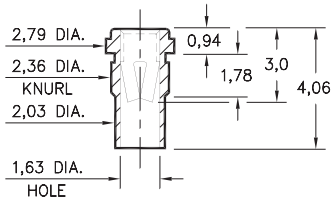

9359-0-15-XX-34-XX-10-0
Press-fit in 2,29 mounting hole

SPECIFICATIONS

SHELL MATERIAL:
Brass Alloy 360, 1/2 Hard

CONTACT MATERIAL:
Beryllium Copper Alloy 172, HT

DIMENSION IN INCHES
TOLERANCES ON:
LENGTHS: ±0,13
DIAMETERS: ±0,05
ANGLES: ± 2°

ORDER CODE: XXXX - 0 - 15 - XX - 34 - XX - XX - 0

BASIC PART #

SPECIFY SHELL FINISH:
01 5,08µm TIN/LEAD OVER NICKEL
80 5,08µm TIN OVER NICKEL ◇
15 0,25µm GOLD OVER NICKEL ◇

SPECIFY CONTACT FINISH:
01 5,08µm TIN/LEAD OVER NICKEL
80 5,08µm TIN OVER NICKEL ◇
27 0,76µm GOLD OVER NICKEL ◇

RoHS 2002/95/EC

CONTACT
#34 CONTACT (DATA ON PAGE 222)

PIN RECEPTACLES
for 0,81 - 1,17 diameter pins (#34 contact)

8838

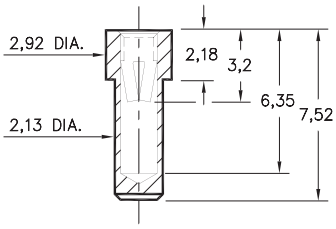

8838-0-15-XX-34-XX-10-0
Solder mount in 2,18 min. mounting hole

3100

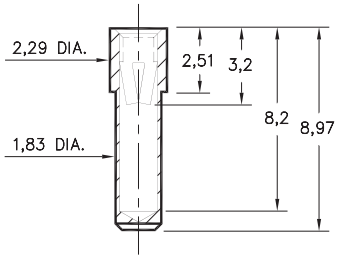

3100-0-15-XX-34-XX-10-0
Solder mount in 1,88 min. mounting hole

8853

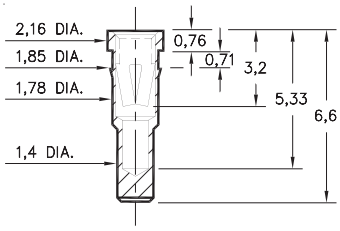

8853-0-15-XX-34-XX-10-0
Press-fit in 1,8 mounting hole

6800

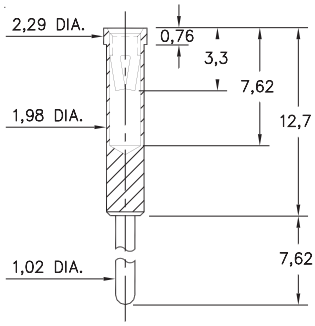

6800-0-15-XX-34-XX-04-0
Solder mount in 2,03 min. mounting hole

8206

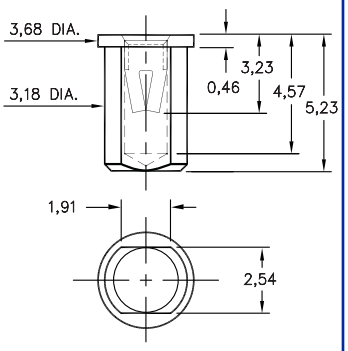

8206-0-15-XX-34-XX-40-0
Surface mount

0739

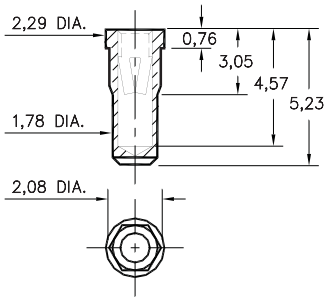

0739-0-15-XX-34-XX-10-0
Hex press-fit in 1,98±0,05 plated thru hole

SPECIFICATIONS

SHELL MATERIAL:
Brass Alloy 360, 1/2 Hard

CONTACT MATERIAL:
Beryllium Copper Alloy 172, HT

DIMENSION IN INCHES
TOLERANCES ON:
LENGTHS: ±0,13
DIAMETERS: ±0,05
ANGLES: ±.002°

ORDER CODE: XXXX - 0 - 15 - XX - 34 - XX - 10 - 0

BASIC PART #

SPECIFY SHELL FINISH:
01 5,08µm TIN/LEAD OVER NICKEL
80 5,08µm TIN OVER NICKEL ◇
15 0,25µm GOLD OVER NICKEL ◇

SPECIFY CONTACT FINISH:
01 5,08µm TIN/LEAD OVER NICKEL
80 5,08µm TIN OVER NICKEL ◇
27 0,76µm GOLD OVER NICKEL ◇

RoHS 2002/95/EC

CONTACT
#34 CONTACT (DATA ON PAGE 222)

PIN RECEPTACLES
for 1,02 - 1,27 diameter pins

0355

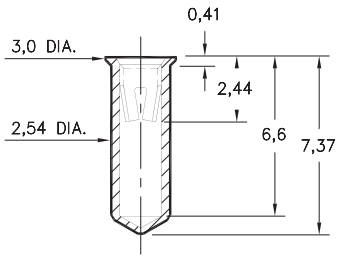

0355-0-15-XX-02-XX-10-0
Solder mount in 2,59 min. mounting hole

0354

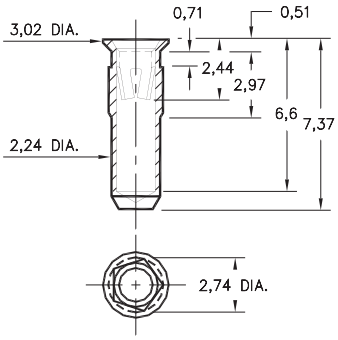

0354-0-15-XX-02-XX-10-0
Pentagonal press-fit in 2,64 min. plated thru hole

3490

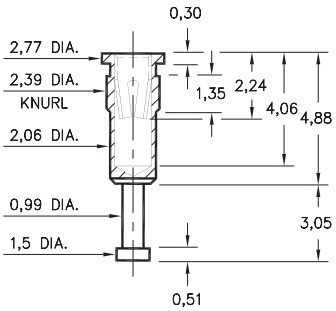

3490-0-15-XX-02-XX-10-0
Press-fit in 2,31 mounting hole

3808

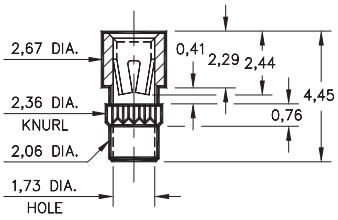

3808-0-15-XX-02-XX-10-0
Press-fit in 2,29 mounting hole

9184

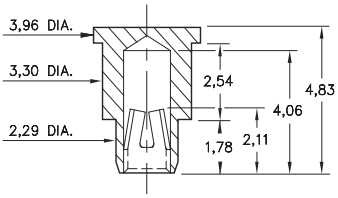

9184-0-15-XX-02-XX-40-0
Bottom entry, surface mount
2,34 min. plated thru hole.
Also available on carrier tape,
Order as: 9184-0-57-XX-02-XX-40-0

9222

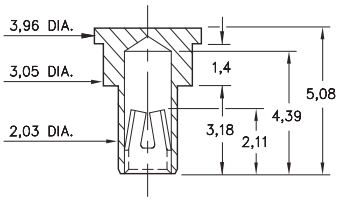

9222-2-15-XX-02-XX-40-0
Bottom entry, surface mount
2,08 min. plated thru hole
Also available on carrier tape,
Order as: 9222-2-57-XX-02-XX-40-0

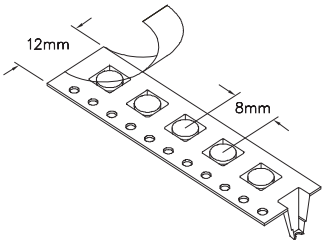

Carrier tape format for
9184 & 9222.
1,500 pieces per 330mm reel

SPECIFICATIONS

SHELL MATERIAL:
Brass Alloy 360, 1/2 Hard

CONTACT MATERIAL:
Beryllium Copper Alloy 172, HT

DIMENSION IN INCHES
TOLERANCES ON:
LENGTHS: ±0,13
DIAMETERS: ±0,05
ANGLES: ± 2°

ORDER CODE: XXXX - X - 15 - XX - 02 - XX - 10 - 0

BASIC PART #

SPECIFY SHELL FINISH:
01 5,08µm TIN/LEAD OVER NICKEL
80 5,08µm TIN OVER NICKEL ◇
15 0,25µm GOLD OVER NICKEL ◇

SPECIFY CONTACT FINISH:
01 5,08µm TIN/LEAD OVER NICKEL
80 5,08µm TIN OVER NICKEL ◇
27 0,76µm GOLD OVER NICKEL ◇

RoHS 2002/95/EC

CONTACT
#02 CONTACT (DATA ON PAGE 223)

PIN RECEPTACLES
for 1,02 - 1,52 diameter pins (#03 contact) and 1,5 - 1,6 diameter pins (#42 contact)

0433/8433

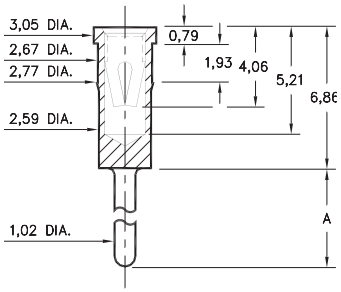

Basic Part Number	Length A
0433-0	3,05
8433-0	8,38

X433-0-15-XX-03-XX-04-0
Press-fit in 2,69 mounting hole

0435/0436

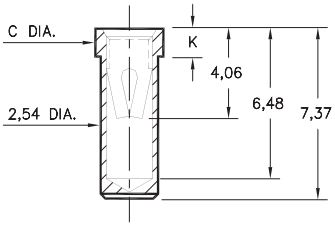

Basic Part Number	Dia. C	Length K
0435-0	3,0	1,27
0436-0	3,18	1,78

0435-0-15-XX-03-XX-10-0
Solder mount in 2,59 min. mounting hole
Also available on 24mm wide carrier tape: 950 parts per 330mm reel.
Order as: 0435-0-57-XX-03-XX-10-0

0434

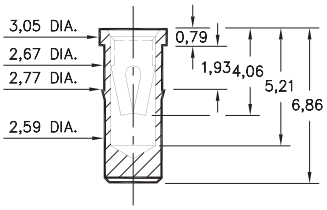

0434-0-15-XX-03-XX-10-0
Press-fit in 2,69 mounting hole

4064

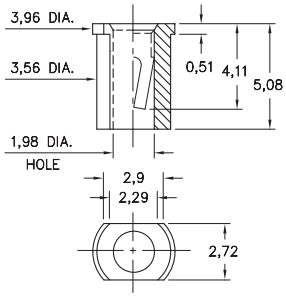

4064-0-18-XX-03-XX-40-0
Surface mount
Also available on 16mm wide carrier tape: 2,400 parts per 330mm reel.
Order as: 4064-0-58-XX-03-XX-40-0

0342

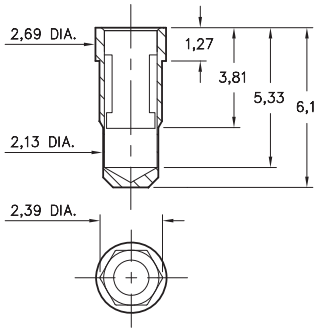

0342-0-15-XX-42-XX-10-0
Hex press-fit in 2,29±0,05 plated thru hole

- 0342 receptacle uses Mill-Max's new #42 Contact. This receptacle will accept the Ø1,55±0,05 power pins of ¼ brick DC/DC converters.
- #42 contact can be ordered in standard receptacles that use #03 contact; or it can be specified as the spring element inside custom made receptacles.

Mechanical Data #42 Contact:
Insertion/Extraction Force with a Ø1,55 (nominal) pin**:**

First Cycle		2nd & Subsequent Cycles	
Insertion Force	Extraction Force	Insertion Force	Extraction Force
20N	6N	10N	6N

Compliancy Test (the "spring back" characteristic of the contact to accept Ø1,5 small pin after insertion of a Ø1,6 large pin) :

Initial Cycle with Ø1,5 pin		Second Cycle with Ø1,6 pin		Third Cycle with Ø1,5 pin	
Ins. Force	Ext. Force	Ins. Force	Ext. Force	Ins. Force	Ext. Force
18N	6N	22N	7N	3N	2N

(Insertion/Extraction Forces are in Newtons and measured with polished steel gage pins having elliptical shaped tips).

SPECIFICATIONS

SHELL MATERIAL:
Brass Alloy 360, 1/2 Hard

CONTACT MATERIAL:
Beryllium Copper Alloy 172, HT

DIMENSION IN INCHES
TOLERANCES ON:
LENGTHS: ±0,13
DIAMETERS: ±0,05
ANGLES: ± 2°

ORDER CODE: XXXX - X - 15 - XX - XX - XX - XX - 0

BASIC PART #

SPECIFY SHELL FINISH:
01 5,08µm TIN/LEAD OVER NICKEL
80 5,08µm TIN OVER NICKEL ◇
15 0,25µm GOLD OVER NICKEL ◇

SPECIFY CONTACT FINISH:
01 5,08µm TIN/LEAD OVER NICKEL
80 5,08µm TIN OVER NICKEL ◇
27 0,76µm GOLD OVER NICKEL ◇

RoHS 2002/95/EC

SELECT CONTACT
#03 (DATA ON PAGE 224) **or#42** CONTACT

PIN RECEPTACLES
for 1,22 - 1,63 diameter pins (#13 contact) and 1,14 - 1,65 diameter pins (#23 contact)

0364

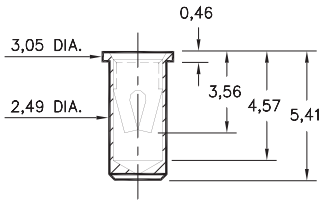

0364-0-15-XX-13-XX-10-0
Solder mount in 2,54 min. mounting hole
Also available on 16mm wide carrier tape: 1,300 parts per 330mm reel.
Order as: 0364-0-57-XX-13-XX-10-0

0363

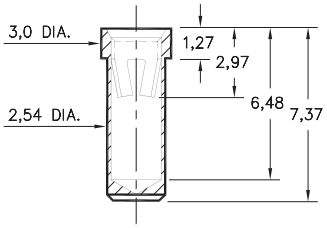

0363-0-15-XX-23-XX-10-0
Solder mount in 2,59 min. mounting hole

0365

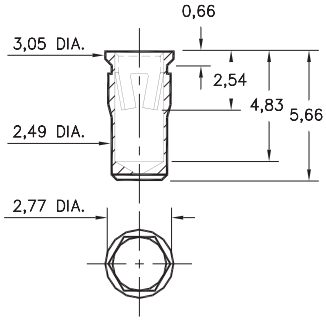

0365-0-15-XX-23-XX-10-0
Hex press-fit in 2,67 plated thru hole

0366

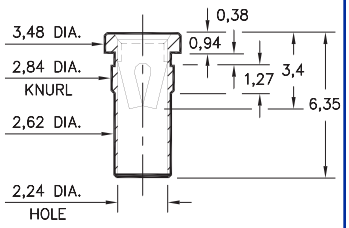

0366-0-15-XX-13-XX-10-0
Press-fit in 2,77 mounting hole

0372

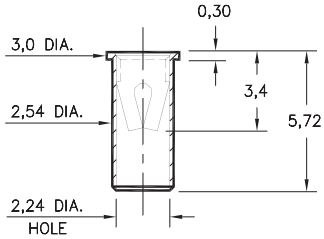

0372-0-15-XX-13-XX-10-0
Solder mount in 2,59 min. mounting hole

0362

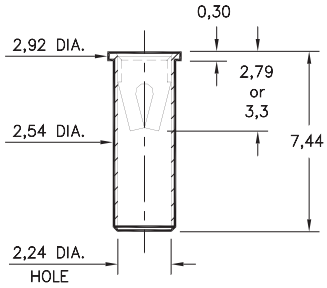

0362-0-15-XX-X3-XX-10-0
Solder mount in 2,59 min. mounting hole

0367

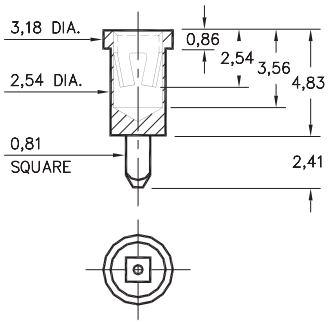

0367-0-15-XX-23-XX-10-0
Square press-fit in 1,02 plated thru hole

9324

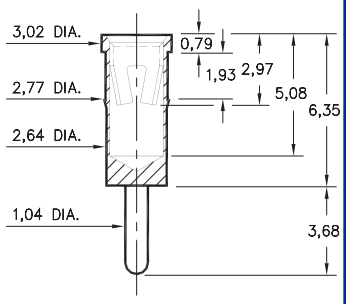

9324-0-15-XX-23-XX-04-0
Press-fit in 2,69 mounting hole

0492

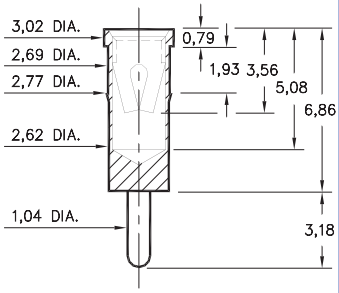

0492-0-15-XX-13-XX-04-0
Press-fit in 2,69 mounting hole

0381

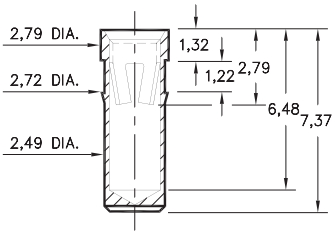

0381-0-15-XX-23-XX-10-0
Press-fit in 2,64 mounting hole

4034

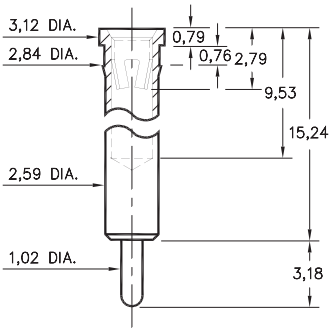

4034-0-15-XX-23-XX-04-0
Press-fit in 2,77 mounting hole

3044

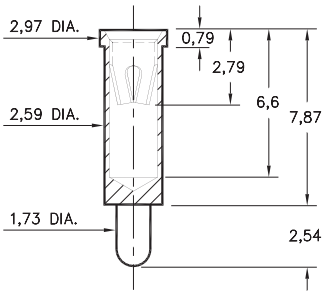

3044-0-15-XX-23-XX-04-0
Solder mount in 2,64 min. mounting hole

SPECIFICATIONS

SHELL MATERIAL:
Brass Alloy 360, 1/2 Hard

CONTACT MATERIAL:
Beryllium Copper Alloy 172, HT

DIMENSION IN INCHES
TOLERANCES ON:
LENGTHS: ±0,13
DIAMETERS: ±0,05
ANGLES: ± 2°

ORDER CODE: XXXX - X - 15 - XX - X3 - XX - XX - 0

BASIC PART #

SPECIFY SHELL FINISH:
01 5,08µm TIN/LEAD OVER NICKEL
80 5,08µm TIN OVER NICKEL ◇
15 0,25µm GOLD OVER NICKEL ◇

SPECIFY CONTACT FINISH:
01 5,08µm TIN/LEAD OVER NICKEL
80 5,08µm TIN OVER NICKEL ◇
27 0,76µm GOLD OVER NICKEL ◇

RoHS 2002/95/EC

SELECT CONTACT
#13 or #23 CONTACT (DATA ON PAGES 224 & 225)

PIN RECEPTACLES
for 1,22 - 1,63 diameter pins (#13 contact) and 1,14 - 1,65 diameter pins (#23 contact)

0496

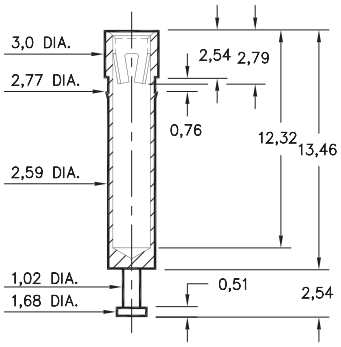

0496-0-15-XX-23-XX-10-0
Press-fit in 2,69 mounting hole

0368

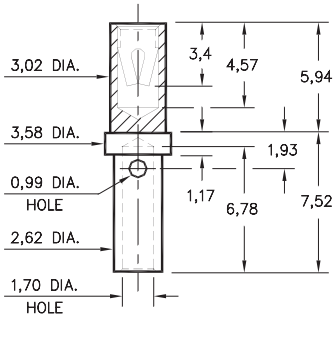

0368-0-33-XX-13-XX-10-0
#16A Crimp Barrel

8067

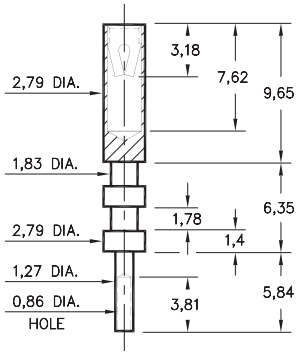

8067-0-19-XX-13-XX-10-0
Wire Termination

1105

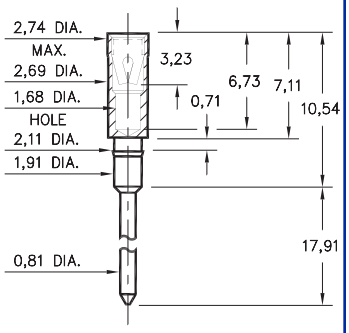

1105-0-15-XX-13-XX-04-0
Press-fit in 2,03 mounting hole

8730

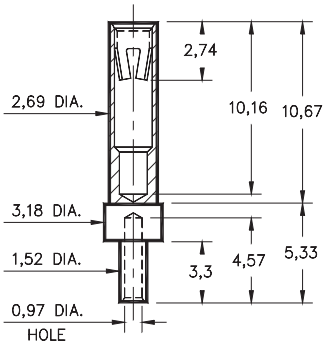

8730-0-19-XX-23-XX-10-0
Wire Termination

3667

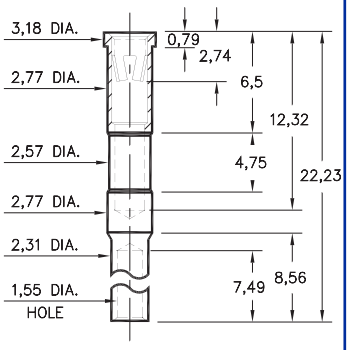

3667-0-19-XX-23-XX-10-0
Wire Termination

9372

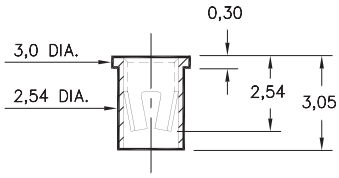

9372-0-15-XX-23-XX-10-0
Solder mount in 2,59 min. mounting hole

4582

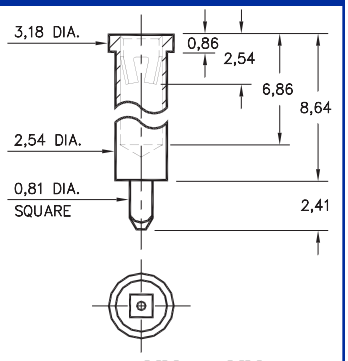

4582-0-15-XX-23-XX-10-0
Square press-fit in 1,02 plated thru hole

5834

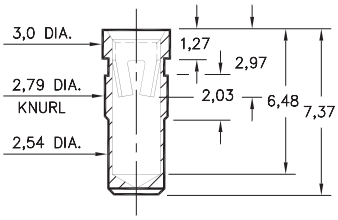

5834-0-15-XX-23-XX-10-0
Press-fit in 2,72 mounting hole

9401

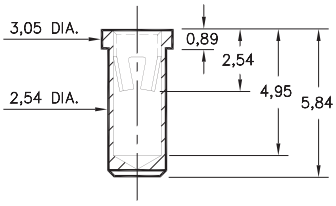

9401-0-15-XX-23-XX-10-0
Solder mount in 2,59 min. mounting hole
Also available on 24mm wide carrier tape: 1,100 parts per 330mm reel.
Order as: 9401-0-57-XX-23-XX-10-0

9801

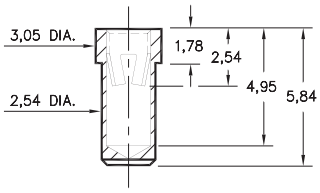

9801-0-15-XX-23-XX-10-0
Solder mount in 2,59 min. mounting hole
Also available on 16mm wide carrier tape: 1,200 parts per 330mm reel.
Order as: 9801-0-57-XX-23-XX-10-0

8829

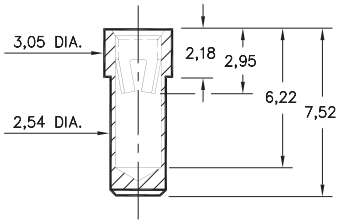

8829-0-15-XX-23-XX-10-0
Solder mount in 2,59 min. mounting hole

SPECIFICATIONS

SHELL MATERIAL:
Brass Alloy 360, 1/2 Hard

CONTACT MATERIAL:
Beryllium Copper Alloy 172, HT

DIMENSION IN INCHES
TOLERANCES ON:
LENGTHS: ±0,13
DIAMETERS: ±0,05
ANGLES: ± 2°

ORDER CODE: XXXX - X - XX - XX - X3 - XX - XX - 0

BASIC PART #

SPECIFY SHELL FINISH:
01 5,08µm TIN/LEAD OVER NICKEL
80 5,08µm TIN OVER NICKEL ◇
15 0,25µm GOLD OVER NICKEL ◇

SPECIFY CONTACT FINISH:
01 5,08µm TIN/LEAD OVER NICKEL
80 5,08µm TIN OVER NICKEL ◇
27 30µm GOLD OVER NICKEL ◇

RoHS 2002/95/EC

SELECT CONTACT
#13 or #23 CONTACT (DATA ON PAGES 224 & 225)

PIN RECEPTACLES
for 1,22 - 1,63 diameter pins (#13 contact)
for 1,14 - 1,65 diameter pins (#23 contact)

8365

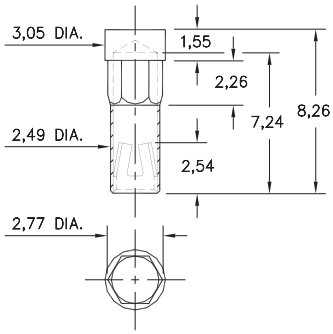

8365-0-15-XX-13-XX-10-0
Hex-pressfit in 2,69 plated thru hole.

8996

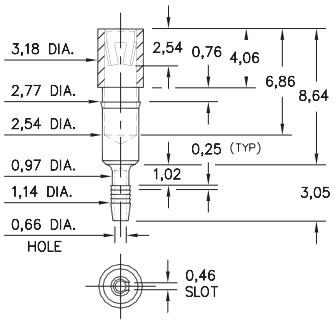

8996-0-31-XX-13-XX-04-0
Compliant press-fit in 1,02±0,08 plated hole. For 1,52→2,54 thick board.

9064

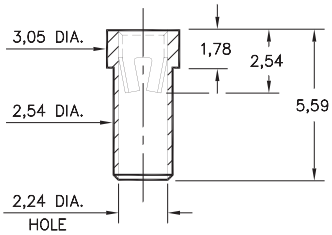

9064-0-15-XX-13-XX-10-0
Solder mount in 2,59 min. mounting hole

9280

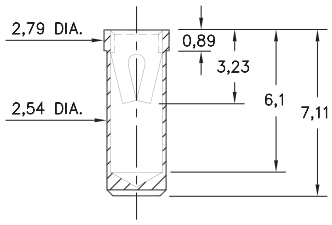

9280-0-15-XX-13-XX-10-0
Solder mount in 2,59 min. mounting hole

4900

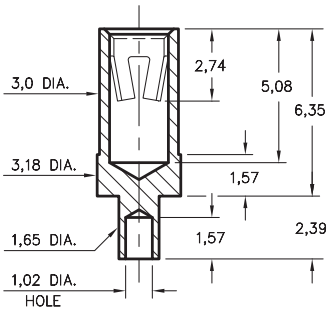

4900-0-19-XX-23-XX-10-0
Swage mount in 1,70 hole

SPECIFICATIONS

SHELL MATERIAL:
Brass Alloy 360, 1/2 Hard

CONTACT MATERIAL:
Beryllium Copper Alloy 172, HT

DIMENSION IN INCHES
TOLERANCES ON:
LENGTHS: ±0,13
DIAMETERS: ±0,05
ANGLES: ± 2°

ORDER CODE: XXXX - X - 15 - XX - X3 - XX - XX - 0

BASIC PART #

SPECIFY SHELL FINISH:
01 5,08µm TIN/LEAD OVER NICKEL
80 5,08µm TIN OVER NICKEL ◇
15 0,25µm GOLD OVER NICKEL ◇

SPECIFY CONTACT FINISH:
01 5,08µm TIN/LEAD OVER NICKEL
80 5,08µm TIN OVER NICKEL ◇
27 0,76µm GOLD OVER NICKEL ◇

RoHS 2002/95/EC

SELECT CONTACT
#13 or #23 CONTACT (DATA ON PAGES 224 & 225)

PIN RECEPTACLES
for 1,65 - 2,08 diameter pins

0394

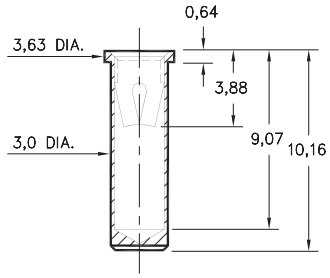

0394-0-15-XX-07-XX-10-0
Solder mount in 3,05 min. mounting hole

0393

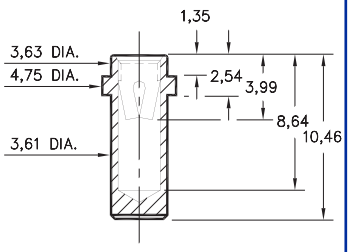

0393-0-15-XX-07-XX-10-0
Solder mount in 3,66 min. mounting hole

0391

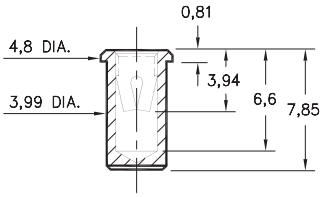

0391-0-15-XX-07-XX-10-0
Solder mount in 4,04 min. mounting hole

9016

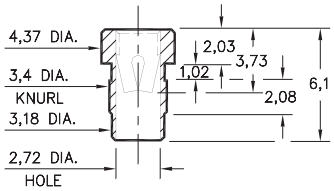

9016-0-15-XX-07-XX-10-0
Press-fit in 3,33 mounting hole

0493

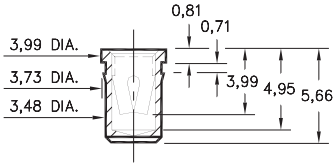

0493-0-15-XX-07-XX-10-0
Press-fit in 3,66 mounting hole

0490

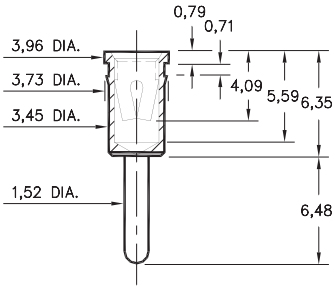

0490-0-15-XX-07-XX-04-0
Press-fit in 3,66 mounting hole

0616

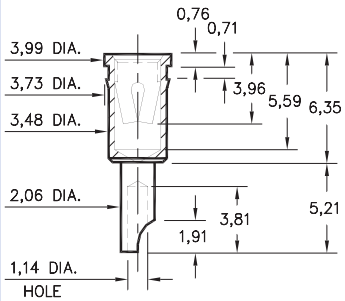

0616-0-18-XX-07-XX-10-0
Press-fit in 3,66 mounting hole

0387

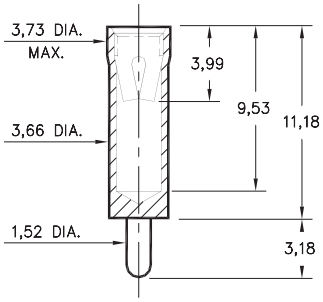

0387-0-15-XX-07-XX-04-0
Solder mount in 1,60 min. mounting hole

0370

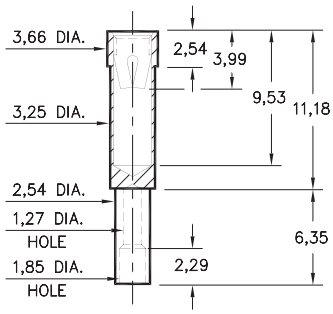

0370-0-19-XX-07-XX-10-0
#18 Gage crimp barrel

4040

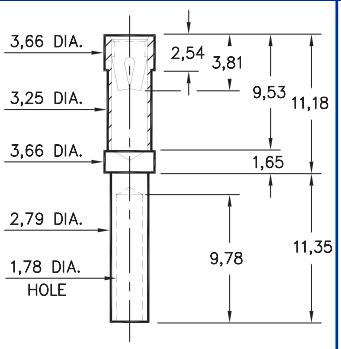

4040-0-19-XX-07-XX-10-0
Wire Termination

0491

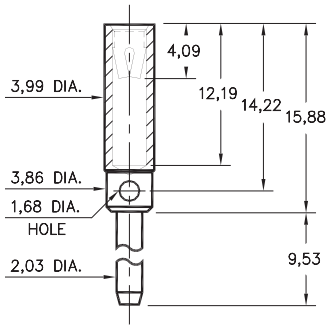

0491-0-19-XX-07-XX-04-0
For use in stackable patch cords

9214

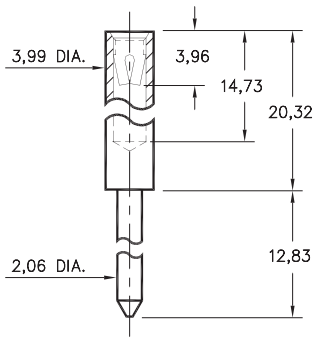

9214-0-15-XX-07-XX-10-0
Solder mount in 2,11 min. mounting hole

SPECIFICATIONS

SHELL MATERIAL:
Brass Alloy 360, 1/2 Hard

CONTACT MATERIAL:
Beryllium Copper Alloy 172, HT

DIMENSION IN INCHES
TOLERANCES ON:
LENGTHS: ±0,13
DIAMETERS: ±0,05
ANGLES: ± 2°

ORDER CODE: XXXX - X - 1X - XX - 07 - XX - XX - 0

BASIC PART #

SPECIFY SHELL FINISH:
01 5,08µm TIN/LEAD OVER NICKEL
80 5,08µm TIN OVER NICKEL ◇
15 0,25µm GOLD OVER NICKEL ◇

SPECIFY CONTACT FINISH:
01 5,08µm TIN/LEAD OVER NICKEL
80 5,08µm TIN OVER NICKEL ◇
27 0,76µm GOLD OVER NICKEL ◇

RoHS 2002/95/EC

CONTACT
#07 CONTACT (DATA ON PAGE 225)

0395

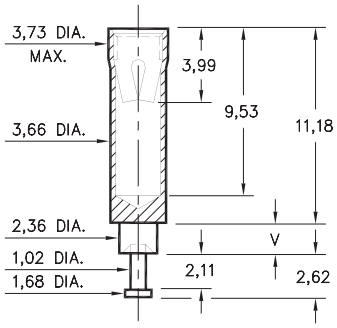

Basic Part Number	Board Thickness	Length V
0395-1	0,79	1,57
0395-2	1,57	2,39
0395-3	2,39	3,18
0395-4	3,18	3,96
0395-5	4,78	5,56

0395-X-15-XX-07-XX-10-0
Swage mount in 2,44 hole

8016

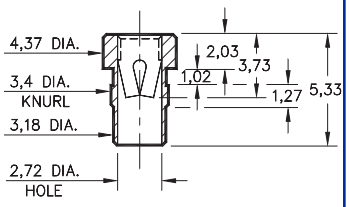

8016-0-15-XX-07-XX-10-0
Press-fit in 3,33 mounting hole

0350

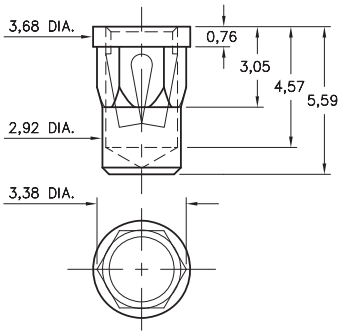

0350-0-15-XX-07-XX-10-0
Hex press-fit in 3,28±0,05
plated thru hole

8837

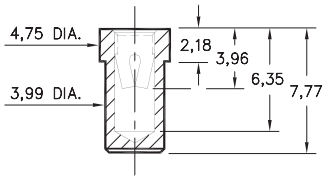

8837-0-15-XX-14-XX-10-0
Solder mount in 4,04 min.
mounting hole

SPECIFICATIONS

SHELL MATERIAL:
Brass Alloy 360, 1/2 Hard

CONTACT MATERIAL:
Beryllium Copper Alloy 172, HT

DIMENSION IN INCHES
TOLERANCES ON:
LENGTHS: ±0,13
DIAMETERS: ±0,05
ANGLES: ± 2°

ORDER CODE: XXXX - X - 15 - XX - XX - XX - 10 - 0

BASIC PART #

SPECIFY SHELL FINISH:
01 5,08µm TIN/LEAD OVER NICKEL
80 5,08µm TIN OVER NICKEL ◇
15 0,25µm GOLD OVER NICKEL ◇

SPECIFY CONTACT FINISH:
01 5,08µm TIN/LEAD OVER NICKEL
80 5,08µm TIN OVER NICKEL ◇
27 0,76µm GOLD OVER NICKEL ◇

RoHS 2002/95/EC

SELECT CONTACT
#07 or #14 CONTACT (DATA ON PAGE 225 & 226)

PIN RECEPTACLES
for 2,13 - 2,59 diameter pins

0388

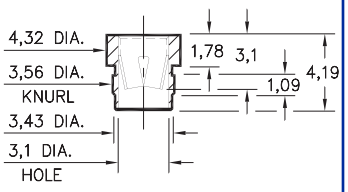

0388-0-15-XX-08-XX-10-0
Press-fit in 3,51 mounting hole

0390

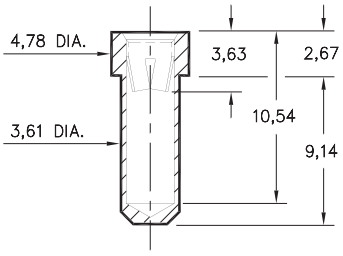

0390-0-15-XX-08-XX-10-0
Solder mount in 3,66 min. mounting hole

0389

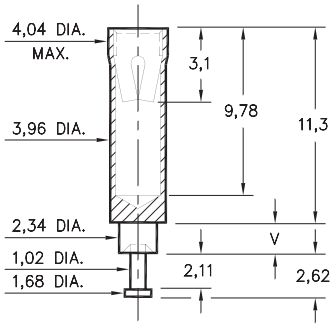

Basic Part Number	Board Thickness	Length V
0389-2	1,57	2,39
0389-3	2,39	3,18
0389-4	3,18	3,96

0389-X-15-XX-08-XX-10-0
Swage mount in 2,39 hole

8963

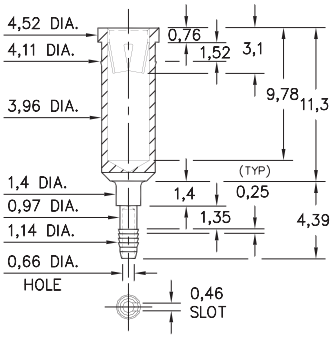

8963-0-31-XX-08-XX-04-0
Compliant press-fit in 1,02±0,08 plated hole. For 1,52→2,54 thick board.

SPECIFICATIONS

SHELL MATERIAL:
Brass Alloy 360, 1/2 Hard

CONTACT MATERIAL:
Beryllium Copper Alloy 172, HT

DIMENSION IN INCHES
TOLERANCES ON:
LENGTHS: ±0,13
DIAMETERS: ±0,05
ANGLES: ± 2°

ORDER CODE: XXXX - X - 15 - XX - 08 - XX - XX - 0

BASIC PART #

SPECIFY SHELL FINISH:
01 5,08µm TIN/LEAD OVER NICKEL
80 5,08µm TIN OVER NICKEL ◇
15 0,25µm GOLD OVER NICKEL ◇

SPECIFY CONTACT FINISH:
01 5,08µm TIN/LEAD OVER NICKEL
80 5,08µm TIN OVER NICKEL ◇
27 0,76µm GOLD OVER NICKEL ◇

RoHS 2002/95/EC

CONTACT
#08 CONTACT (DATA ON PAGE 226)

PIN RECEPTACLES
With Organic Fibre Plug® Solder Barrier
(see specific contact range on pages 216, 217, 218 & 221)

- These through-hole (tubular) receptacles are designed for hand, wave or reflow* soldering. The *ORGANIC FIBRE PLUG®* barrier prevents solder, paste or flux from contaminating the spring contact.
- After soldering, the *OFP®* barrier is pushed out of the receptacle when the device is plugged in.
- All parts are available as discrete receptacles; but for SMT assembly, certain receptacles are supplied on carrier tape per EIA-481 to feed industry standard pick and place machines.

**Intrusive reflow (also called "pin-in-paste") is a technique of using conventional through-hole components in a reflow soldering process. The receptacles are placed into plated through-holes in the circuit board (solder paste has previously been screen printed on pads adjacent to the holes) and the board is reflowed in the same pass as other SMT components. Solder will fill the plated through-holes and achieve solder joints as reliable as wave soldering. The OFP® barrier prevents solder paste from being picked-up inside the contact during pick 'n place assembly. "Overprinting" paste on the solder mask can be used to adjust the volume of paste required to fill each hole.*

5359

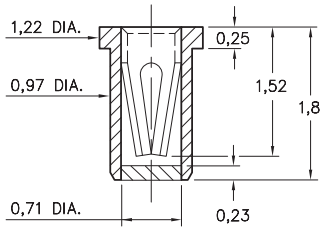

5359-0-XX-XX-10-XX-10-0
Solder mount in Ø1,09±0,08 PTH.
#10 Contact for Ø0,3-0,43 pins.
Also available on 16mm wide carrier tape: 3,000 parts per 330mm reel.

0577

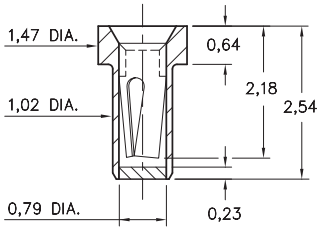

0577-0-XX-XX-21-XX-10-0
Solder mount in Ø1,14±0,08 PTH.
#21 Contact for Ø0,38-0,56 pins.
Also available on 12mm wide carrier tape: 3,000 parts per 330mm reel.

4015

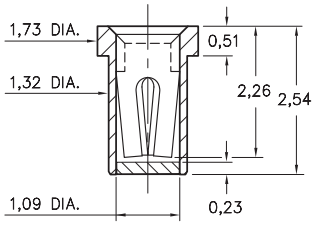

4015-0-XX-XX-30-XX-10-0
Solder mount in Ø1,45±0,08 PTH.
#30 Contact for Ø0,38-0,64 pins.
Also available on 8mm wide carrier tape: 5,500 parts per 330mm reel.

3435

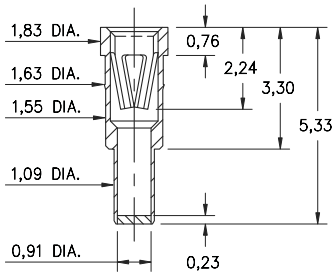

3435-0-XX-XX-47-XX-04-0
Solder mount in Ø1,17±0,08 PTH.
#47 Contact for Ø0,64-0,91 and 0,64 square pins.

SPECIFICATIONS

SHELL MATERIAL:
Brass Alloy 360, 1/2 Hard
CONTACT MATERIAL:
Beryllium Copper Alloy 172, HT
SOLDER BARRIER:
Organic Fibre Plug®
DIMENSION IN INCHES
TOLERANCES ON:
LENGTHS: ±0,13
DIAMETERS: ±0,05
ANGLES: ± 2°

ORDER CODE: XXXX - 0 - XX - XX - XX - XX -10 - 0

BASIC PART #

SPECIFY PACKAGING:
43 Discrete Receptacles
67 Supplied on 330mm Reels

SPECIFY SHELL FINISH:
01 5,08µm TIN/LEAD OVER NICKEL
80 5,08µm TIN OVER NICKEL ◇

CONTACT #
#10, #21, #30 or #47 CONTACT (DATA ON PAGES 216, 217, 218 & 221)

SPECIFY CONTACT FINISH:
27 0,76µm GOLD OVER NICKEL ◇
02 2,54µm TIN/LEAD OVER NICKEL
84 2,54µm TIN OVER NICKEL ◇

RoHS 2002/95/EC

PIN RECEPTACLES
With Organic Fibre Plug® Solder Barrier
(see specific contact range on pages 221 - 226)

4280

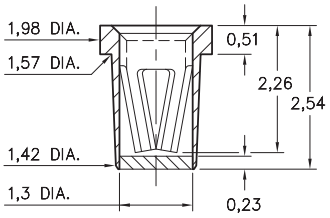

4280-0-XX-XX-16-XX-10-0
Solder mount in Ø1,7±0,08 PTH.
#16 Contact for Ø0,56-0,86 pins.
Also available on 8mm wide carrier tape: 6,000 parts per 330mm reel.

5280

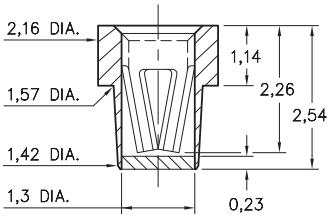

5280-0-XX-XX-16-XX-40-0
Solder mount in Ø1,7±0,08 PTH.
#16 Contact for Ø0,56-0,86 pins.
Also available on 16mm wide carrier tape: 2,200 parts per 330mm reel.

0479

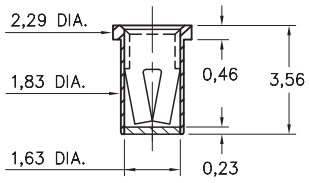

0479-0-XX-XX-34-XX-10-0
Solder mount in Ø1,96±0,08 PTH.
#34 Contact for Ø0,81-1,17 pins.
Also available on 16mm wide carrier tape: 2,000 parts per 330mm reel.

0379

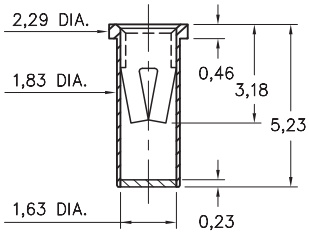

0379-0-43-XX-34-XX-10-0
Solder mount in Ø1,96±0,08 PTH.
#34 Contact for Ø0,81-1,17 pins.

9873

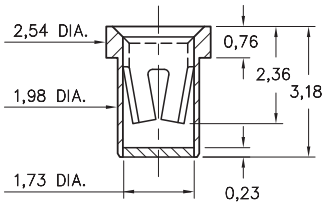

9873-0-XX-XX-02-XX-10-0
Solder mount in Ø2,11±0,08 PTH.
#02 Contact for Ø1,02-1,27 pins.
Also available on 12mm wide carrier tape: 4,500 parts per 330mm reel.

5364

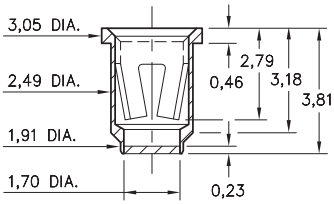

5364-0-XX-XX-23-XX-10-0
Solder mount in Ø2,62±0,08 PTH.
#23 Contact for Ø1,14-1,65 pins.
Also available on 12mm wide carrier tape: 2,000 parts per 330mm reel.

5291

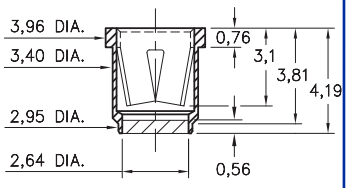

5291-0-XX-XX-08-XX-40-0
Solder mount in Ø3,53±0,08 PTH.
#08 Contact for Ø2,13-2,59 pins.
Also available on 16mm wide carrier tape: 1,700 parts per 330mm reel.

3966

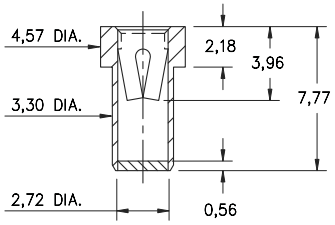

3966-0-XX-XX-07-XX-10-0
Solder mount in Ø3,43±0,08 PTH.
#07 Contact for Ø1,65-2,08 pins.
Also available on 24mm wide carrier tape: 650 parts per 330mm reel.

SPECIFICATIONS

SHELL MATERIAL:
Brass Alloy 360, 1/2 Hard
CONTACT MATERIAL:
Beryllium Copper Alloy 172, HT
SOLDER BARRIER:
Organic Fibre Plug®
DIMENSION IN INCHES
TOLERANCES ON:
LENGTHS: ±0,13
DIAMETERS: ±0,05
ANGLES: ± 2°

ORDER CODE: XXXX - 0 - XX - XX - XX - XX -X0 - 0

BASIC PART #

SPECIFY PACKAGING:
43 Discrete Receptacles
67 Supplied on 330mm Reels

SPECIFY SHELL FINISH:
01 5,08µm TIN/LEAD OVER NICKEL
80 5,08µm TIN OVER NICKEL ◇

CONTACT #
#02, #07, #08, #16, #23 or #34 CONTACT (DATA ON PAGES 221 - 226)

SPECIFY CONTACT FINISH:
27 0,76µm GOLD OVER NICKEL ◇
01 5,08µm TIN/LEAD OVER NICKEL
80 5,08µm TIN OVER NICKEL ◇

RoHS 2002/95/EC

1702/1703

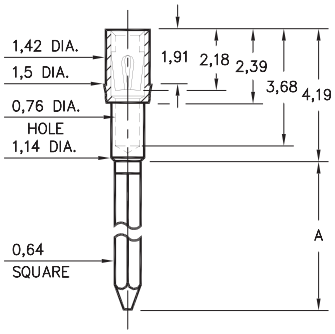

Basic Part Number	# of Wraps	Length A
1702-2	2	9,4
1703-3	3	12,95

170X-X-17-XX-30-XX-02-0
Press-fit in 1,45 mounting hole

0038⇒0040/0066⇒0068

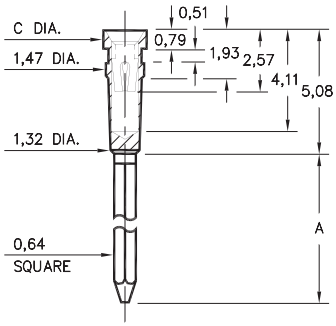

Basic Part #	# of Wraps	Length A	Dia. C
0040-1	1	6,6	
0039-2	2	9,14	1,83
0038-3	3	12,7	
0068-1	1	6,6	
0067-2	2	9,14	1,57
0066-3	3	12,7	

00XX-X-17-XX-30-XX-02-0
Press-fit in 1,4 mounting hole

0086/0088/0089

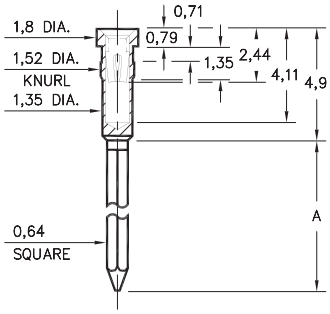

Basic Part Number	# of Wraps	Length A
0089-2	2	9,4
0088-3	3	12,95
0086-4	4	16,0

008X-X-17-XX-3X-XX-02-0
Press-fit in 1,45 mounting hole

1030⇒1036

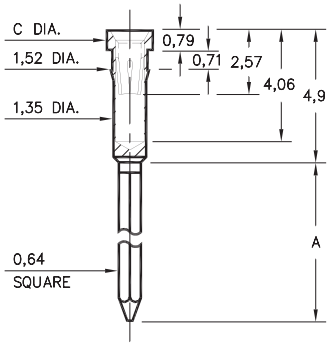

Basic Part #	# of Wraps	Length A	Dia. C
1032-1	1	6,6	
1031-2	2	9,14	1,83
1030-3	3	12,95	
1036-1	1	6,6	
1035-2	2	9,14	1,57
1034-3	3	12,95	

103X-X-17-XX-3X-XX-02-0
Press-fit in 1,45 mounting hole

1045

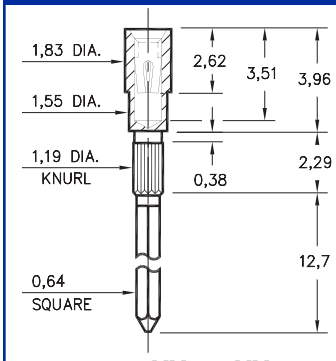

1045-3-17-XX-30-XX-02-0
Press-fit in 1,09 mounting hole

1040

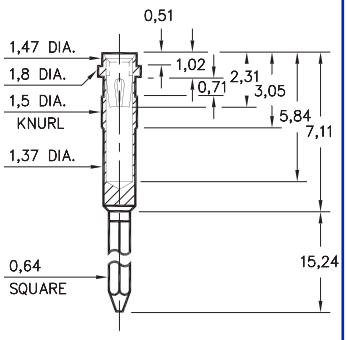

1040-3-17-XX-30-XX-02-0
Press-fit in 1,42 mounting hole

SPECIFICATIONS

SHELL MATERIAL:
Brass Alloy 360, 1/2 Hard

CONTACT MATERIAL:
Beryllium Copper Alloy 172, HT

DIMENSION IN INCHES
TOLERANCES ON:
LENGTHS: ±0,13
DIAMETERS: ±0,05
ANGLES: ± 2°

ORDER CODE: XXXX - X - 17 - XX - 3X - XX - 02 - 0

BASIC PART #

SPECIFY SHELL FINISH:
01 5,08µmTIN/LEAD OVER NICKEL
80 5,08µm TIN OVER NICKEL ◇
15 0,25µm GOLD OVER NICKEL ◇

SPECIFY CONTACT FINISH:
02 2,54µm TIN/LEAD OVER NICKEL
84 2,54µm TIN OVER NICKEL ◇
27 0,76µm GOLD OVER NICKEL ◇

RoHS 2002/95/EC

SELECT CONTACT
#30 or #32 CONTACT (DATA ON PAGES 218 & 219)

0444

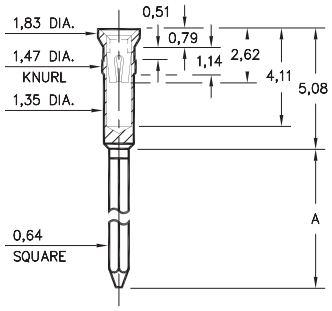

Basic Part Number	# of Wraps	Length A
0444-1	1	6,6
0444-2	2	9,4
0444-3	3	12,83

0444-X-17-XX-30-XX-02-0
Press-fit in 1,42 mounting hole

0445

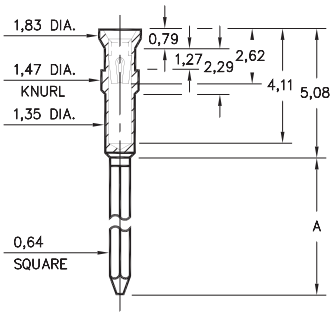

Basic Part Number	# of Wraps	Length A
0445-3	3	12,83

044X-X-17-XX-30-XX-02-0
Press-fit in 1,42 mounting hole

2601⇒ 2603

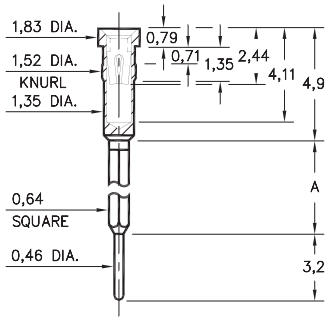

Basic Part Number	# of Wraps	Length A
2601-0	1	5,89
2602-0	2	8,89
2603-0	3	11,89

260X-X-17-XX-30-XX-02-0
Press-fit in 1,45 mounting hole

1047

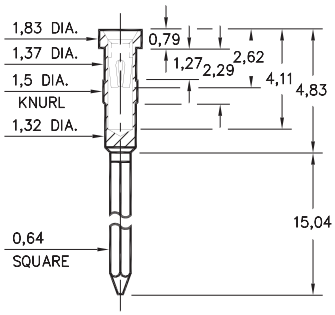

1047-3-17-XX-30-XX-02-0
Press-fit in 1,42 mounting hole

SPECIFICATIONS

SHELL MATERIAL:
Brass Alloy 360, 1/2 Hard

CONTACT MATERIAL:
Beryllium Copper Alloy 172, HT

DIMENSION IN INCHES
TOLERANCES ON:
LENGTHS: ±0,13
DIAMETERS: ±0,05
ANGLES: ± 2°

ORDER CODE: XXXX - X - 17 - XX - 30 - XX - 02 - 0

BASIC PART #

SPECIFY SHELL FINISH:
01 5,08µm TIN/LEAD OVER NICKEL
80 5,08µm TIN OVER NICKEL ◇
15 0,25µm GOLD OVER NICKEL ◇

SPECIFY CONTACT FINISH:
02 2,54µm TIN/LEAD OVER NICKEL
84 2,54µm TIN OVER NICKEL ◇
27 0,76µm GOLD OVER NICKEL ◇

RoHS 2002/95/EC

CONTACT
#30 CONTACT (DATA ON PAGE 218)

WRAPOST RECEPTACLES
for 0,56 - 0,81 diameter pins (#06 contact) and 0,56 - 0,86 diameter pins (#16 contact)

2297

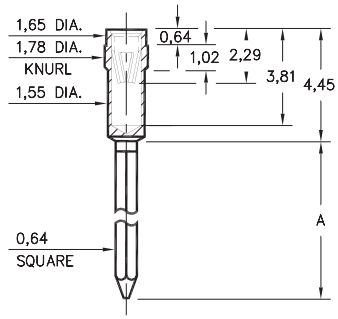

Basic Part Number	# of Wraps	Length A
2297-2	2	9,4
2297-3	3	10,92

2297-X-17-XX-16-XX-02-0
Press-fit in 1,70 mounting hole

0280

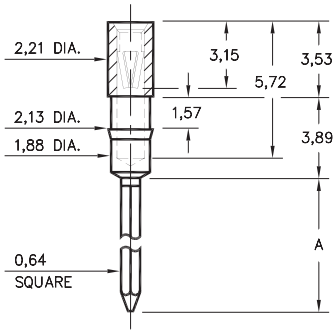

Basic Part Number	# of Wraps	Length A
0280-2	2	9,14
0280-3	3	12,95

0280-X-17-XX-06-XX-02-0
Press-fit in 2,06 mounting hole

0281

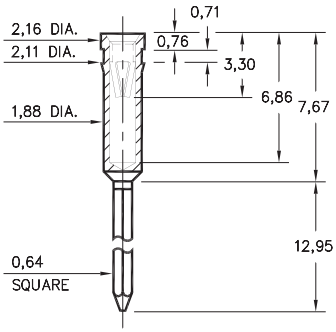

0281-3-17-XX-06-XX-02-0
Press-fit in 2,03 mounting hole

SPECIFICATIONS

SHELL MATERIAL:
Brass Alloy 360, 1/2 Hard

CONTACT MATERIAL:
Beryllium Copper Alloy 172, HT

DIMENSION IN INCHES
TOLERANCES ON:
LENGTHS: ±0,13
DIAMETERS: ±0,05
ANGLES: ± 2°

ORDER CODE: XXXX - X - 17 - XX - X6 - XX - 02 - 0

BASIC PART #

SPECIFY SHELL FINISH:
01 5,08µm TIN/LEAD OVER NICKEL
80 5,08µm TIN OVER NICKEL ◇
15 0,25µm GOLD OVER NICKEL ◇

SPECIFY CONTACT FINISH:
01 5,08µm TIN/LEAD OVER NICKEL
80 5,08µm TIN OVER NICKEL ◇
27 0,76µm GOLD OVER NICKEL ◇

RoHS 2002/95/EC

SELECT CONTACT
#06 or #16 CONTACT (DATA ON PAGES 220 & 221)

1052/1053

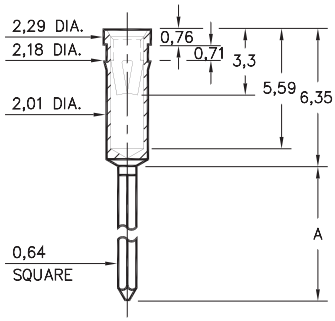

Basic Part Number	# of Wraps	Length A
1053-2	2	9,14
1052-3	3	13,08

105X-X-17-XX-34-XX-02-0
Press-fit in 2,11 mounting hole

0383

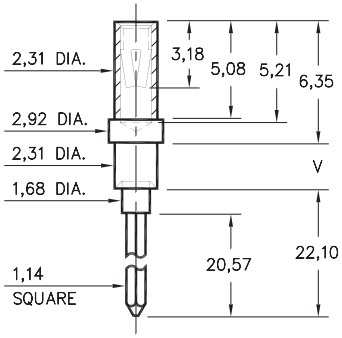

Basic Part Number	Board Thickness	Length V
0383-1	1,57	2,39
0383-2	2,39	3,18
0383-3	3,18	3,96

0383-X-17-XX-34-XX-02-0
Swage mount in 2,39 hole

0382

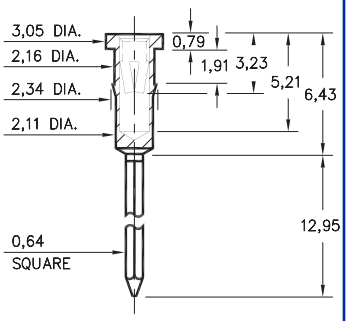

0382-3-17-XX-34-XX-02-0
Press-fit in 2,26 mounting hole

SPECIFICATIONS

SHELL MATERIAL:
Brass Alloy 360, 1/2 Hard

CONTACT MATERIAL:
Beryllium Copper Alloy 172, HT

DIMENSION IN INCHES
TOLERANCES ON:
LENGTHS: ±0,13
DIAMETERS: ±0,05
ANGLES: ± 2°

ORDER CODE: XXXX - X - 17 - XX - 34 - XX - 02 - 0

BASIC PART #

SPECIFY SHELL FINISH:
01 5,08µm TIN/LEAD OVER NICKEL
80 5,08µm TIN OVER NICKEL ◇
15 0,25µm GOLD OVER NICKEL ◇

SPECIFY CONTACT FINISH:
01 5,08µm TIN/LEAD OVER NICKEL
80 5,08µm TIN OVER NICKEL ◇
27 0,76µm GOLD OVER NICKEL ◇

RoHS 2002/95/EC

CONTACT
#34 CONTACT (DATA ON PAGE 222)

THE BASIC PIN

Mill-Max printed circuit pins are machined individual pins used for various plug-in applications and are functionally the dynamic building blocks within an interconnect system. Turret, slotted, wrapost and pin types are available. They are commonly fastened to printed circuit boards by being press-fit, swaged (riveted) or soldered.

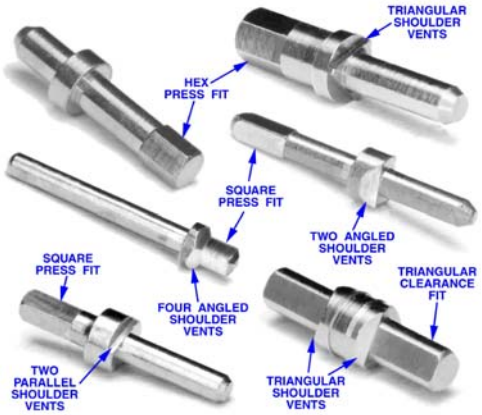

PCB pins serve not only as a conductive path for an electrical circuit, but provide strength to an assembly module as a mechanical interface. Mill-Max Mfg. Corp. has developed thousands of state-of-the-art “basic pin” designs, featuring pin barrel geometries for our customers who require outside-the-box solutions to their interconnect needs.

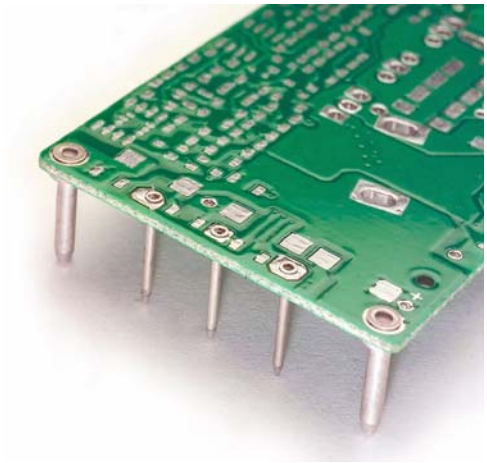

In addition to the products found on the following pages Mill-Max offers the following stock materials and diameters available for manufacture:

BRASS Alloy 360, 1/2 hard: 1,57/1,83/1,98/2,36/3,18/3,96/ 4,75/6,35 diameters
BRASS Alloy 360, 1/4 hard: 1,83/1,98 diameters
BRASS TUBING: 1,83 O.D. x 0,51 I.D. / 1,83 O.D. x 0,64 I.D.
PHOSPHOR BRONZE Alloy 544: 1,57/1,83/1,98 diameters
TELLURIUM COPPER Alloy 145: 2,01/2,36/3,18/3,96 diameters

Mill-Max will gladly quote application specific products. Please complete the specification sheet on page 213 or send us your own drawings. We assure you a fast response.

PRINTED CIRCUIT PINS
Nail Head Type

4184

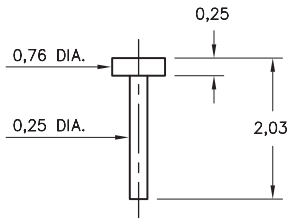

4184-0-00-XX-00-00-33-0
Solder mount in 0,36 mounting hole

9050

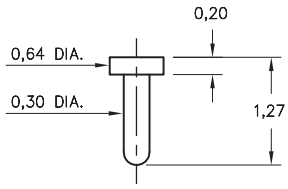

9050-0-00-XX-00-00-33-0
Solder mount in 0,41 mounting hole

4353

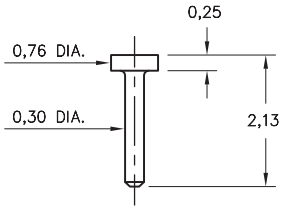

4353-0-00-XX-00-00-33-0
Solder mount in 0,41 mounting hole

9083

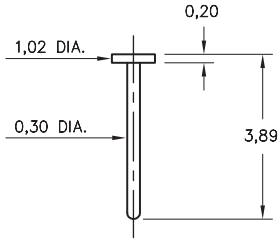

9083-0-00-XX-00-00-38-0
Solder mount in 0,41 mounting hole

4825

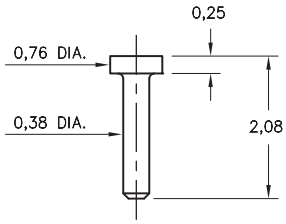

4825-0-00-XX-00-00-33-0
Solder mount in 0,48 mounting hole

4689

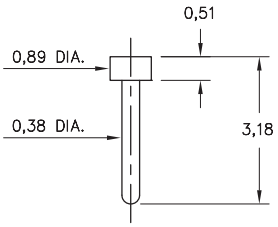

4689-0-00-XX-00-00-33-0
Solder mount in 0,48 mounting hole

4361

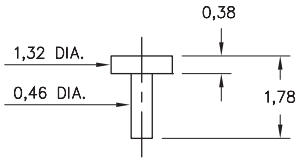

4361-0-00-XX-00-00-33-0
Solder mount in 0,56 mounting hole

4288

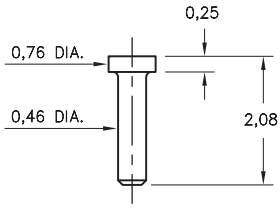

4288-0-00-XX-00-00-33-0
Solder mount in 0,56 mounting hole

4068

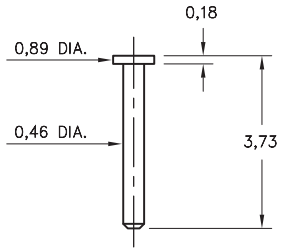

4068-0-00-XX-00-00-33-0
Solder mount in 0,56 mounting hole

9113

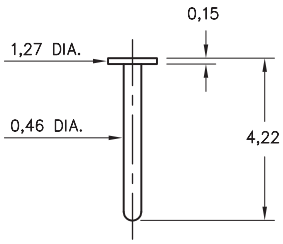

9113-0-00-XX-00-00-38-0
Solder mount in 0,56 mounting hole

9137

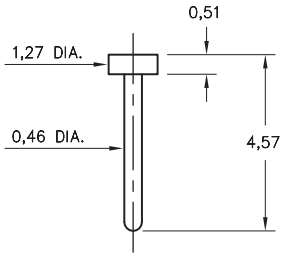

9137-0-00-XX-00-00-38-0
Solder mount in 0,56 mounting hole

5137

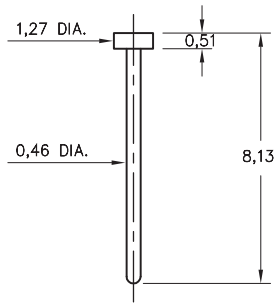

5137-0-00-XX-00-00-38-0
Solder mount in 0,56 mounting hole

SPECIFICATIONS

PIN MATERIAL:
Brass Alloy 360, 1/2 Hard
(Except where noted)

DIMENSION IN INCHES
TOLERANCES ON:
LENGTHS: ±0,13
DIAMETERS: ±0,05
ANGLES: ± 2°

ORDER CODE: XXXX - X - 00 - XX - 00 - 00 - 3X - 0

BASIC PART #

SPECIFY PIN FINISH:
01 5,08µm TIN/LEAD OVER NICKEL
80 5,08µm TIN OVER NICKEL ◇
15 0,25µm GOLD OVER NICKEL ◇
21 0,51µm GOLD OVER NICKEL ◇
34 1,27µm GOLD OVER NICKEL ◇

RoHS 2002/95/EC

PRINTED CIRCUIT PINS
Nail Head Type

4209

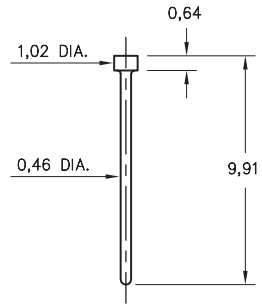

4209-0-00-XX-00-00-33-0
Solder mount in 0,56 mounting hole

5063

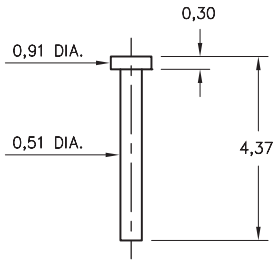

5063-0-00-XX-00-00-33-0
Solder mount in 0,61 mounting hole

4965

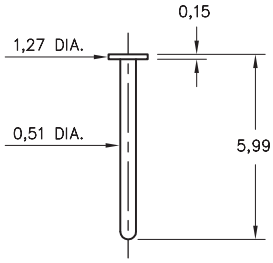

4965-0-00-XX-00-00-33-0
Solder mount in 0,61 mounting hole

6547

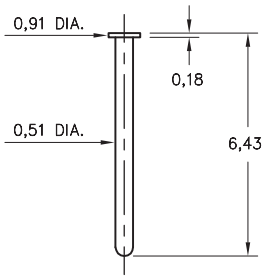

6547-0-00-XX-00-00-33-0
Solder mount in 0,61 mounting hole

4071

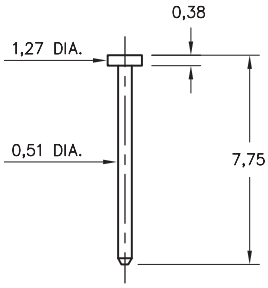

4071-0-00-XX-00-00-33-0
Solder mount in 0,61 mounting hole

8808

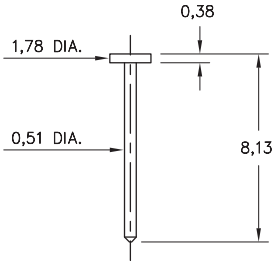

8808-0-00-XX-00-00-33-0
Solder mount in 0,61 mounting hole

4964

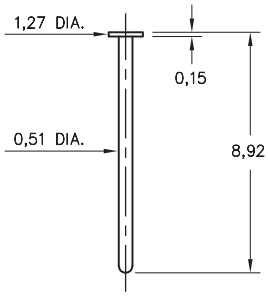

4964-0-00-XX-00-00-33-0
Solder mount in 0,61 mounting hole

9185

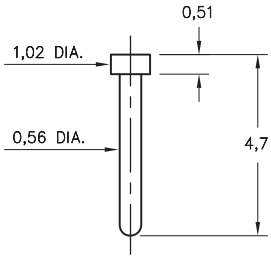

9185-0-00-XX-00-00-33-0
Solder mount in 0,67 mounting hole

8257

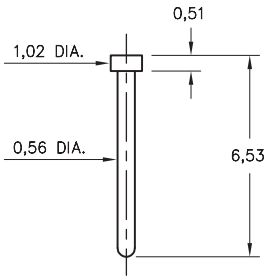

8257-0-00-XX-00-00-33-0
Solder mount in 0,66 mounting hole

5035

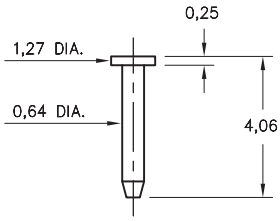

5035-0-00-XX-00-00-33-0
Solder mount in 0,74 mounting hole

5240

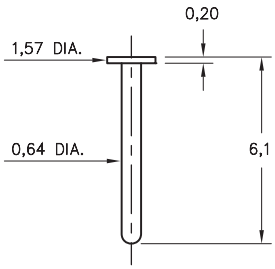

5240-0-00-XX-00-00-33-0
Solder mount in 0,74 mounting hole

2650

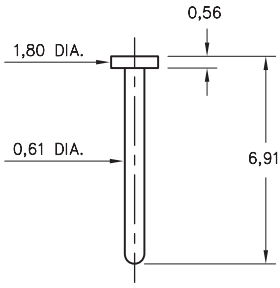

2650-0-00-XX-00-00-33-0
Solder mount in 0,74 mounting hole

SPECIFICATIONS

PIN MATERIAL:
Brass Alloy 360, 1/2 Hard
(Except where noted)

DIMENSION IN INCHES
TOLERANCES ON:
LENGTHS: ±0,13
DIAMETERS: ±0,05
ANGLES: ± 2°

ORDER CODE: XXXX - X - 00 - XX - 00 - 00 - 33 - 0

BASIC PART #

SPECIFY PIN FINISH:
01 5,08µm TIN/LEAD OVER NICKEL
80 5,08µm TIN OVER NICKEL ◇
15 0,25µm GOLD OVER NICKEL ◇
21 0,51µm GOLD OVER NICKEL ◇
34 1,27µm GOLD OVER NICKEL ◇

RoHS 2002/95/EC

5062

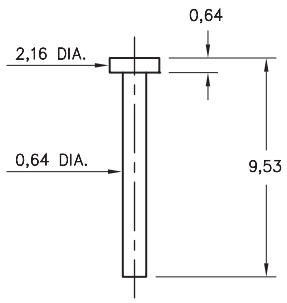

5062-0-00-XX-00-00-33-0
Solder mount in 0,74 mounting hole

8451

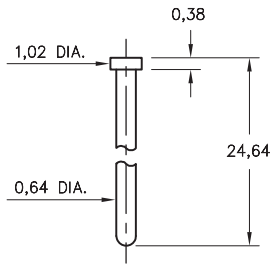

8451-0-00-XX-00-00-33-0
Solder mount in 0,74 mounting hole

6477

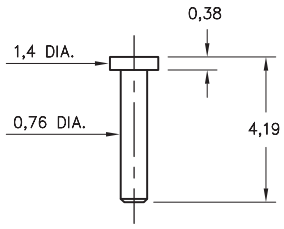

6477-0-00-XX-00-00-38-0
Solder mount in 0,86 mounting hole

4477

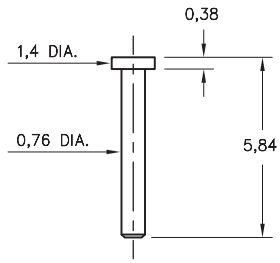

4477-0-00-XX-00-00-33-0
Solder mount in 0,86 mounting hole

4268

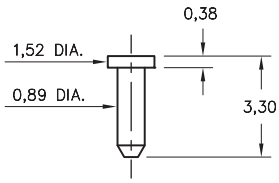

4268-0-00-XX-00-00-33-0
Solder mount in 0,99 mounting hole

9086

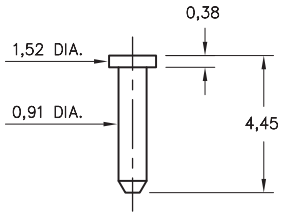

9086-0-00-XX-00-00-33-0
Solder mount in 1,02 mounting hole

8330

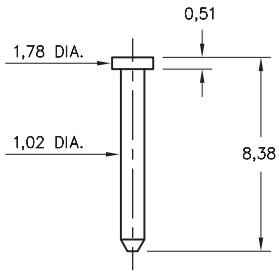

8330-0-00-XX-00-00-38-0
Solder mount in 1,12 mounting hole

9228

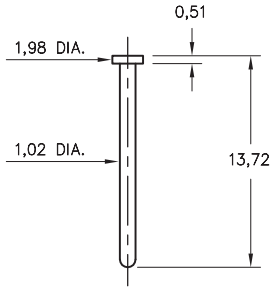

9228-0-00-XX-00-00-38-0
Solder mount in 1,12 mounting hole

6095

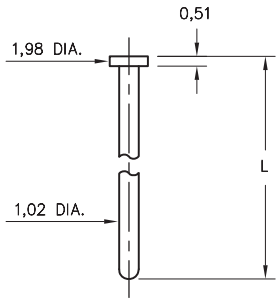

Basic Part Number	Pin Length L
6095-0	14,73
6095-1	12,07

6095-X-00-XX-00-00-38-0
Solder mount in 1,12 mounting hole

6092

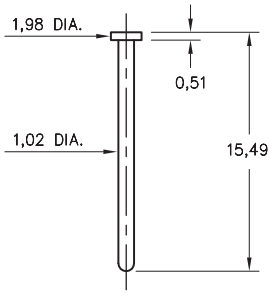

6092-0-00-XX-00-00-33-0
Solder mount in 1,12 mounting hole

SPECIFICATIONS

PIN MATERIAL:
Brass Alloy 360, 1/2 Hard
(Except where noted)

DIMENSION IN INCHES
TOLERANCES ON:
LENGTHS: ±0,13
DIAMETERS: ±0,05
ANGLES: ± 2°

ORDER CODE: XXXX - X - 00 - XX - 00 - 00 - 3X - 0

BASIC PART #

SPECIFY PIN FINISH:
01 5,08µm TIN/LEAD OVER NICKEL
80 5,08µm TIN OVER NICKEL ◇
15 0,25µm GOLD OVER NICKEL ◇
21 0,51µm GOLD OVER NICKEL ◇
34 1,27µm GOLD OVER NICKEL ◇

RoHS 2002/95/EC

1179

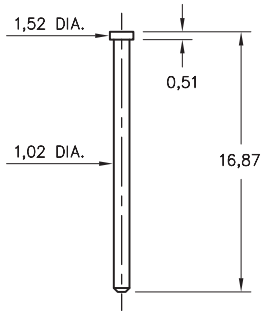

1179-0-00-XX-00-00-33-0
Solder mount in 1,12 mounting hole

9872

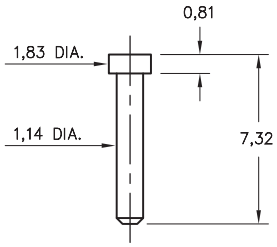

9872-0-00-XX-00-00-33-0
Solder mount in 1,24 mounting hole

2381

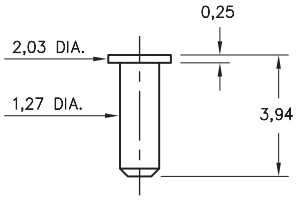

2381-0-00-XX-00-00-33-0
Solder mount in 1,37 mounting hole

9265

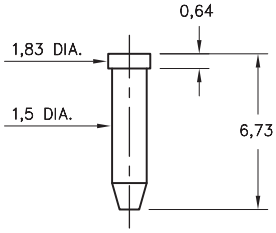

9265-0-00-XX-00-00-38-0
Solder mount in 1,6 mounting hole

6142

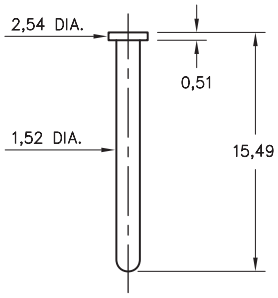

6142-0-00-XX-00-00-33-0
Solder mount in 1,63 mounting hole

9022

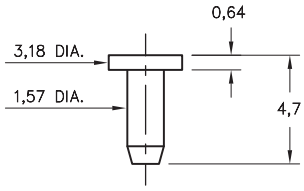

9022-0-00-XX-00-00-33-0
Solder mount in 1,68 mounting hole

8086

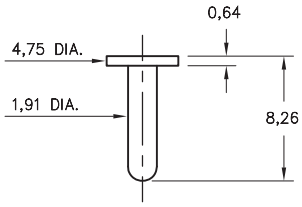

8086-0-00-XX-00-00-33-0
Solder mount in 2,01 mounting hole

SPECIFICATIONS

PIN MATERIAL:
Brass Alloy 360, 1/2 Hard
(Except where noted)

DIMENSION IN INCHES
TOLERANCES ON:
LENGTHS: ±0,13
DIAMETERS: ±0,05
ANGLES: ± 2°

ORDER CODE: XXXX - X - 00 - XX - 00 - 00 - 3X - 0

BASIC PART #

SPECIFY PIN FINISH:
01 5,08µm TIN/LEAD OVER NICKEL
80 5,08µm TIN OVER NICKEL ◇
15 0,25µm GOLD OVER NICKEL ◇
21 0,51µm GOLD OVER NICKEL ◇
34 1,27µm GOLD OVER NICKEL ◇

RoHS 2002/95/EC

4006

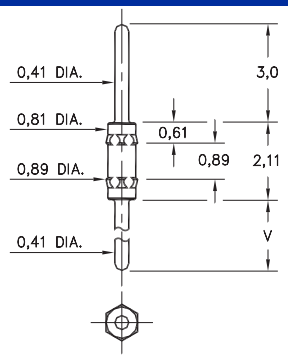

Basic Part Number	Length V
4006-0	3,0
4006-1	4,78
4006-2	7,32

4006-X-00-XX-00-00-03-0
Hex Press-fit in 0,86 mounting hole

3121

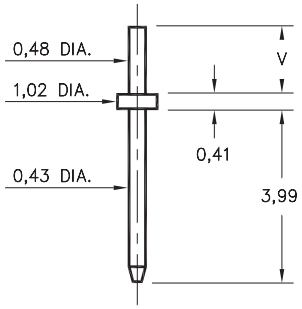

Basic Part Number	Substrate Thickness	Length V
3121-1	0,64	1,55
3121-2	1,02	1,91

3121-X-00-XX-00-00-08-0
Solder mount in 0,58 mounting hole
Material is annealed.

3128

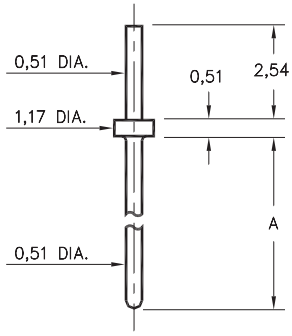

Basic Part Number	Length A
3128-1	6,35
3128-2	10,8
3128-3	13,34
3128-4	14,22
3128-5	23,62

3128-X-00-XX-00-00-08-0
Solder mount in 0,61 min. mounting hole

3006

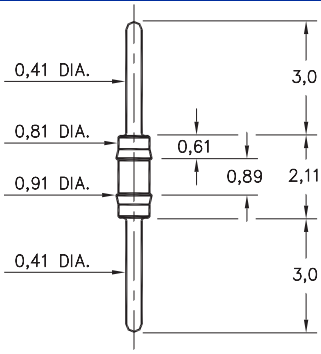

3006-0-00-XX-00-00-03-0
Press-fit in 0,86 mounting hole

8885

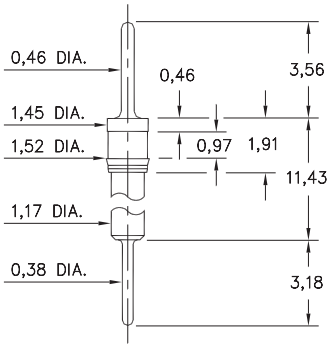

8885-0-00-XX-00-00-03-0
Press-fit in 1,45 mounting hole

6218

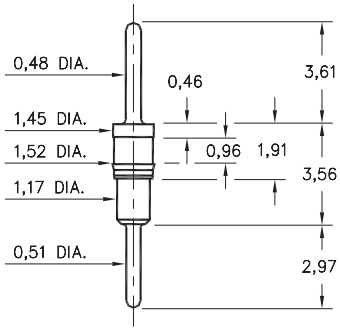

6218-0-00-XX-00-00-03-0
Press-fit in 1,45 mounting hole

5012

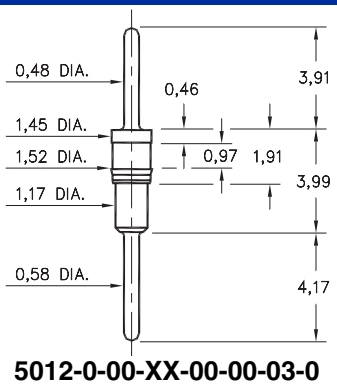

5012-0-00-XX-00-00-03-0
Press-fit in 1,45 mounting hole

0508

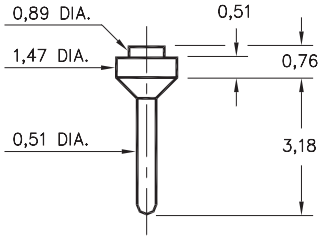

0508-0-00-XX-00-00-03-0
Surface Mount

9081

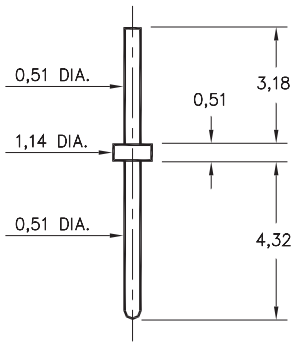

9081-0-00-XX-00-00-08-0
Solder mount in 0,61 mounting hole

SPECIFICATIONS

PIN MATERIAL:
Brass Alloy 360, 1/2 Hard
(Except where noted)

DIMENSION IN INCHES
TOLERANCES ON:
LENGTHS: ±0,13
DIAMETERS: ±0,05
ANGLES: ± 2°

ORDER CODE: XXXX - X - 00 - XX - 00 - 00 - 0X - 0

BASIC PART #

SPECIFY PIN FINISH:
01 5,08µm TIN/LEAD OVER NICKEL
80 5,08µm TIN OVER NICKEL ◇
15 0,25µm GOLD OVER NICKEL ◇
21 0,51µm GOLD OVER NICKEL ◇
34 1,27µm GOLD OVER NICKEL ◇

RoHS 2002/95/EC

8685/9036

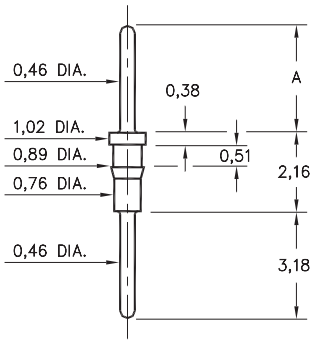

Basic Part Number	Length A
8685-0	3,18
9036-0	4,45

XXXX-0-00-XX-00-00-03-0
Press-fit in 0,84 mounting hole.
Pin material is Ph. Br. 544 (B2)

9051

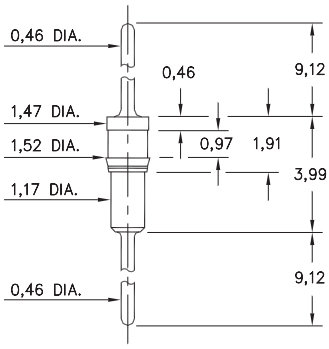

9051-0-00-XX-00-00-03-0
Press-fit in 1,45 mounting hole

8969

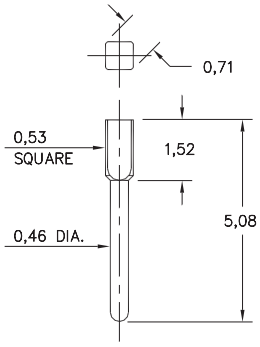

8969-0-05-XX-00-00-03-0
Square press-fit in 0,58 plated thru hole (use .7 mm drill prior to plating)

8979

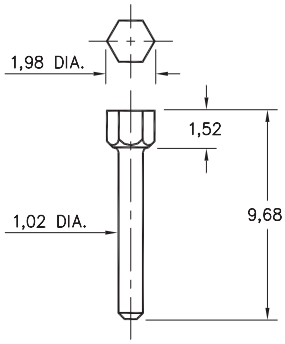

8979-0-00-XX-00-00-03-0
Hex press-fit in 1,88 plated thru hole

9159

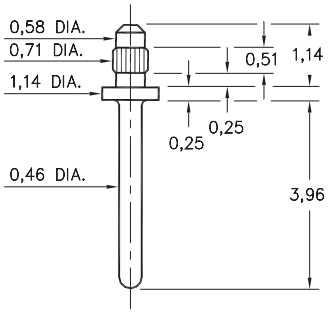

9159-0-00-XX-00-00-03-0
Press-fit in 0,66 mounting hole

3155/5155

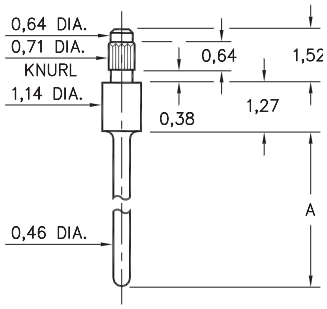

Basic Part Number	Length A
3155-0	4,57
5155-0	3,30

X155-0-00-XX-00-00-03-0
Press-fit in 0,66 mounting hole
Pin material is Ph. Br. 544 (B2)

4194

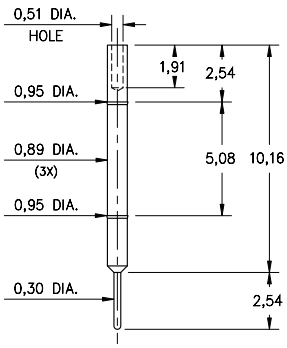

4194-0-00-XX-00-00-08-0
Wire termination and Press-fit in 0,91 hole

5556

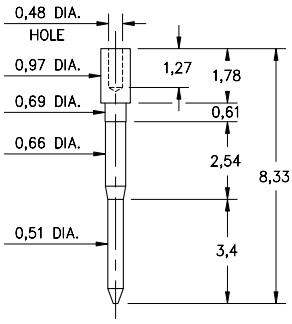

5556-0-00-XX-00-00-38-0
Wire termination

3790

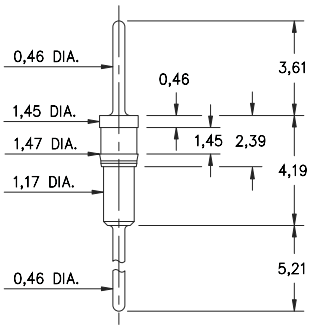

3790-0-00-XX-00-00-03-0
Press-fit in 1,45 mounting hole

3796

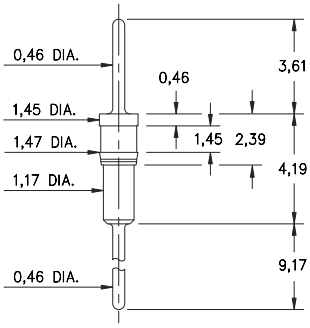

3796-0-00-XX-00-00-03-0
Press-fit in 1,45 mounting hole

SPECIFICATIONS

PIN MATERIAL:
Brass Alloy 360, 1/2 Hard
(Except where noted)

DIMENSION IN INCHES
TOLERANCES ON:
LENGTHS: ±0,13
DIAMETERS: ±0,05
ANGLES: ± 2°

ORDER CODE: XXXX - X - 0X - XX - 00 - 00 - 0X - 0

BASIC PART #

SPECIFY PIN FINISH:
01 5,08µm TIN/LEAD OVER NICKEL
80 5,08µm TIN OVER NICKEL ◇
15 0,25µm GOLD OVER NICKEL ◇
21 0,51µm GOLD OVER NICKEL ◇
34 1,27µm GOLD OVER NICKEL ◇

RoHS 2002/95/EC

3116

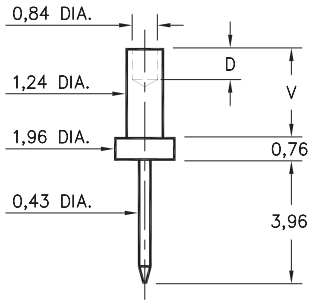

Basic Part Number	Board Thick-ness	Length V	Length D
3116-1	0,79	1,30	0,89
3116-2	1,57	2,08	1,57
3116-3	2,39	2,87	1,57
3116-4	3,18	3,68	1,57

3116-X-00-XX-00-00-08-0
Swage mount in 1,32 hole

5435

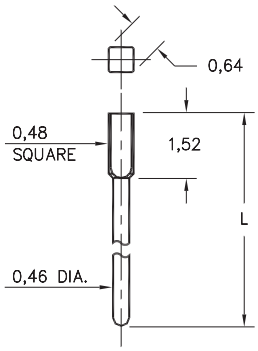

Basic Part Number	Length L
5435-0	7,70
5435-1	5,08
5435-2	10,49

5435-X-05-XX-00-00-03-0
Square press-fit in 0,56
plated thru hole

3135

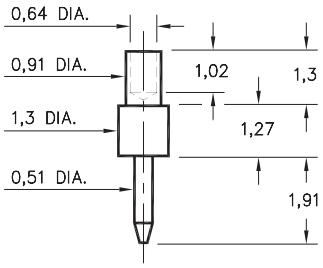

3135-1-00-XX-00-00-08-0
Swage mount in 1,02 hole.
For 0,79 thick board.

3210

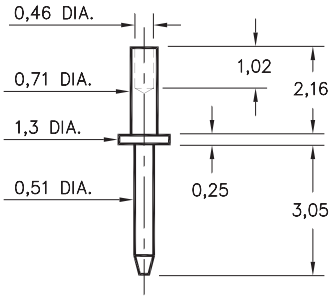

3210-2-00-XX-00-00-08-0
Swage mount in 0,79 hole.
For 1,57 thick board.

3129

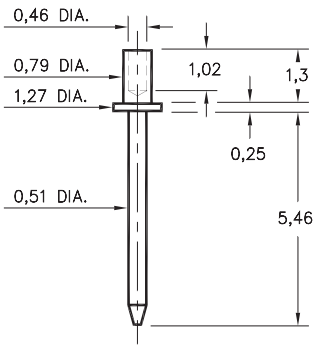

3129-1-00-XX-00-00-08-0
Swage mount in 0,89 hole.
For 0,79 thick board.

3147

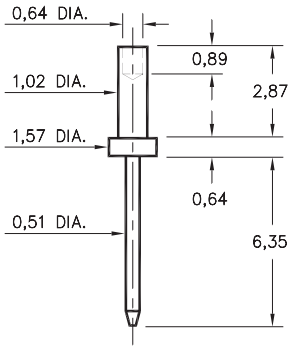

3147-3-00-XX-00-00-08-0
Swage mount in 1,09 hole.
For 2,39 thick board.

4366

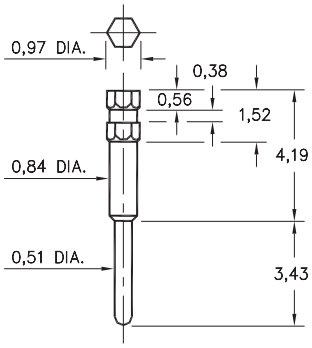

4366-0-00-XX-00-00-03-0
Hex press-fit in 0,86
plated thru hole

1267

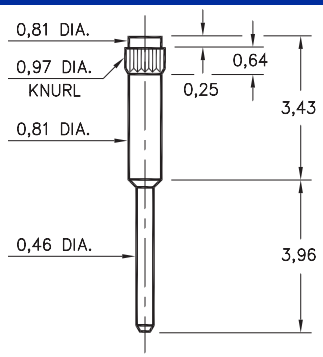

1267-0-00-XX-00-00-03-0
Press-fit in 0,89 mounting hole

7827

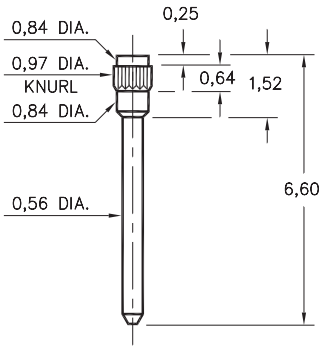

7827-0-00-XX-00-00-03-0
Press-fit in 0,89 mounting hole

1130

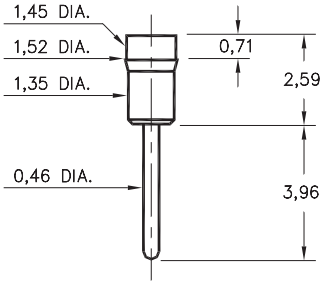

1130-0-00-XX-00-00-03-0
Press-fit in 1,45 mounting hole
Pin material is Ph Br. 544 (B2)

SPECIFICATIONS

PIN MATERIAL:
Brass Alloy 360, 1/2 Hard
(Except Swage pins which
are annealed)

DIMENSION IN INCHES
TOLERANCES ON:
LENGTHS: ±0,13
DIAMETERS: ±0,05
ANGLES: ± 2°

ORDER CODE: XXXX - X - 0X - XX - 00 - 00 - 0X - 0

BASIC PART #

SPECIFY PIN FINISH:
01 5,08µm TIN/LEAD OVER NICKEL
80 5,08µm TIN OVER NICKEL ◇
15 0,25µm GOLD OVER NICKEL ◇
21 0,51µm GOLD OVER NICKEL ◇
34 1,27µm GOLD OVER NICKEL ◇

RoHS 2002/95/EC

1067

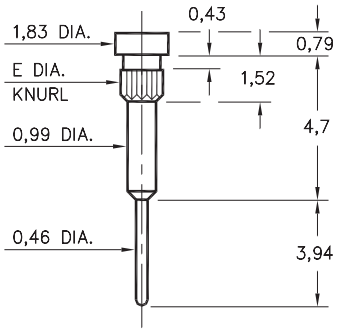

Basic Part Number	Knurl Dia. E	Mounting Hole
1067-1	1,47	1,40
1067-2	1,14	1,07

1067-X-00-XX-00-00-03-0
Press-fit in 1,07/1,40 mounting hole

3158

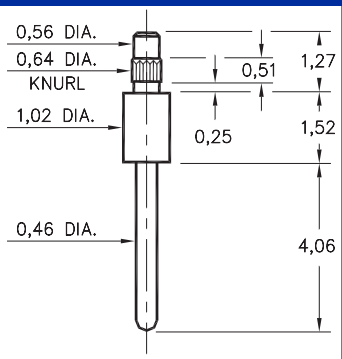

3158-0-00-XX-00-00-03-0
Press-fit in 0,58 mounting hole

9000

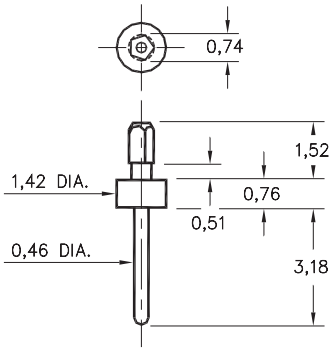

9000-0-00-XX-00-00-03-0
Pentagonal press-fit in 0,64
plated thru hole

3157

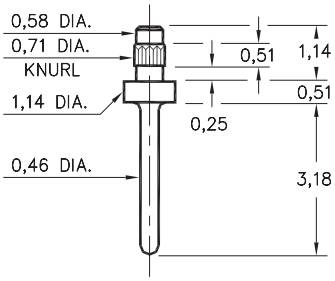

3157-0-00-XX-00-00-03-0
Press-fit in 0,66 mounting hole

0915

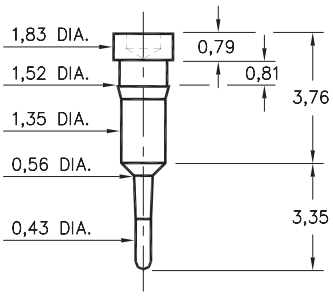

0915-0-00-XX-00-00-03-0
Press-fit in 1,45 mounting hole

3154

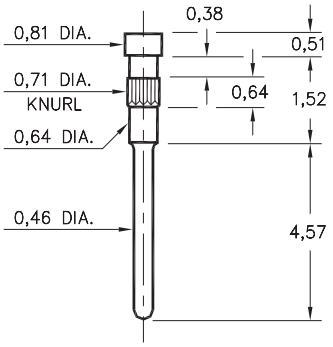

3154-0-00-XX-00-00-03-0
Press-fit in 0,66 mounting hole
Pin material is Ph Br 544 (B2)

0542

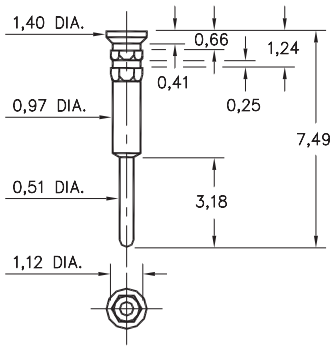

0542-0-00-XX-00-00-03-0
Hex press-fit in 0,99
plated thru hole

0522

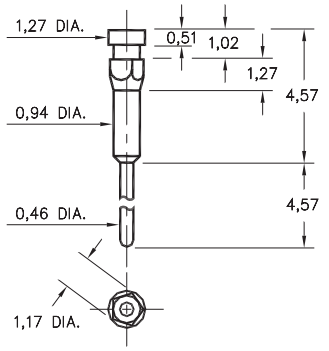

0522-0-00-XX-00-00-03-0
Pentagonal press-fit in 1,07
plated thru hole

0952

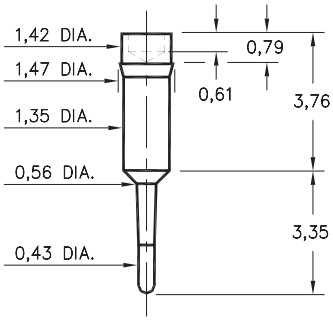

0952-0-00-XX-00-00-03-0
Press-fit in 1,42 mounting hole

0257

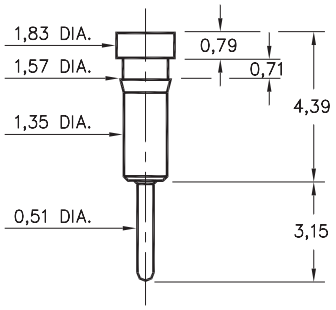

0257-0-00-XX-00-00-03-0
Press-fit in 1,50 mounting hole

SPECIFICATIONS

PIN MATERIAL:
Brass Alloy 360, 1/2 Hard
(Except where noted)

DIMENSION IN INCHES
TOLERANCES ON:
LENGTHS: ±0,13
DIAMETERS: ±0,05
ANGLES: ± 2°

ORDER CODE: XXXX - X - 00 - XX - 00 - 00 - 03 - 0

BASIC PART #

SPECIFY PIN FINISH:
01 5,08µm TIN/LEAD OVER NICKEL
80 5,08µm TIN OVER NICKEL ◇
15 0,25µm GOLD OVER NICKEL ◇
21 0,51µm GOLD OVER NICKEL ◇
34 1,27µm GOLD OVER NICKEL ◇

RoHS 2002/95/EC

0504/0505

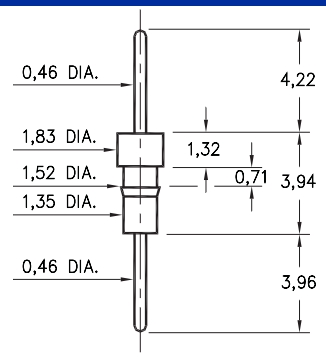

Basic Part Number	Pin Material
0504-0	Ph Br. 544
0505-0	Brass 360

050X-0-00-XX-00-00-03-0
Press-fit in 1,45 mounting hole

5510/5511

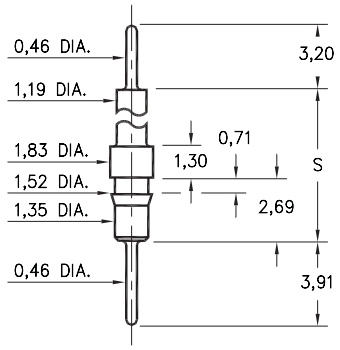

Basic Part Number	Standoff Height S
5510-0	8,41
5511-0	15,39

551X-0-00-XX-00-00-03-0
Press-fit in 1,45 mounting hole

4259

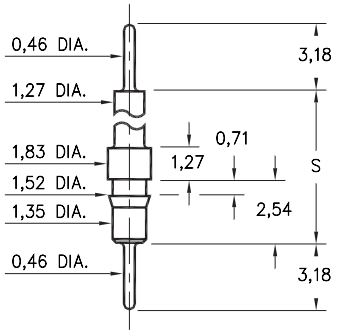

Basic Part Number	Standoff Height S
4259-1	5,33
4259-2	8,51
4259-3	14,86
4259-4	21,21

4259-X-00-XX-00-00-03-0
Press-fit in 1,45 mounting hole

3516

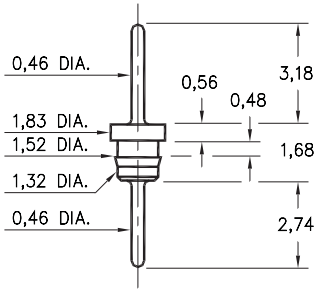

3516-0-00-XX-00-00-03-0
Press-fit in 1,45 mounting hole

8859

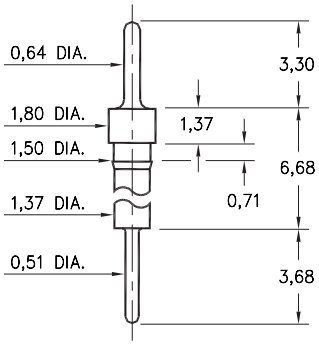

8859-0-00-XX-00-00-03-0
Press-fit in 1,42 mounting hole

6585

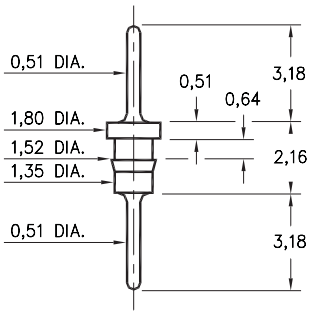

6585-0-00-XX-00-00-03-0
Press-fit in 1,45 mounting hole
Pin material is Ph Br 544 (B2)

3404

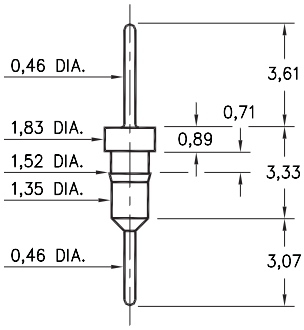

3404-0-00-XX-00-00-03-0
Press-fit in 1,45 mounting hole

3169

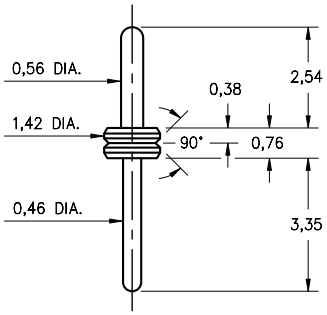

3169-0-00-15-00-00-03-0
V-Groove Header Pin
Also available on Kapton Tape

SPECIFICATIONS

PIN MATERIAL:
Brass Alloy 360, 1/2 Hard
(Except where noted)

DIMENSION IN INCHES
TOLERANCES ON:
LENGTHS: ±0,13
DIAMETERS: ±0,05
ANGLES: ± 2°

ORDER CODE: XXXX - X - 00 - XX - 00 - 00 - 03 - 0

BASIC PART #

SPECIFY PIN FINISH:
01 5,08µm TIN/LEAD OVER NICKEL
80 5,08µm TIN OVER NICKEL ◇
15 0,25µm GOLD OVER NICKEL ◇
21 0,51µm GOLD OVER NICKEL ◇
34 1,27µm GOLD OVER NICKEL ◇

RoHS 2002/95/EC

1752/6458

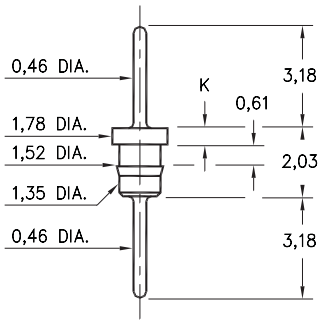

Basic Part Number	Length K
1752-0	0,51
6458-0	0,89

XXXX-0-00-XX-00-00-03-0
Press-fit in 1,45 mounting hole

3413/8404

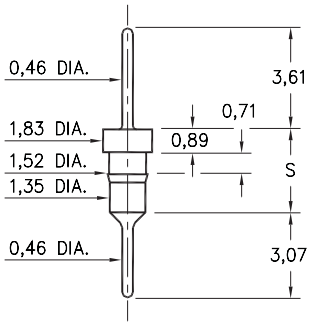

Basic Part Number	Length S
3413-0	3,0
8404-0	3,33

X4XX-0-00-XX-00-00-03-0
Press-fit in 1,45 mounting hole

9075

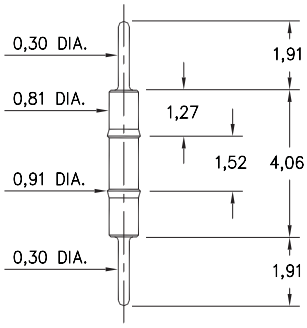

9075-0-00-XX-00-00-03-0
Press-fit in 0,86 mounting hole

9218

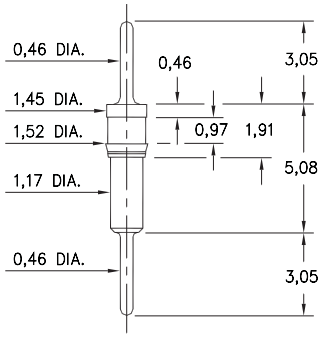

9218-0-00-XX-00-00-03-0
Press-fit in 1,45 mounting hole

2617

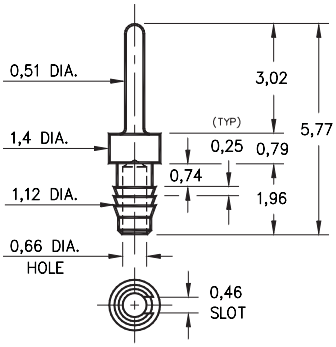

2617-0-01-XX-00-00-03-0
Compliant press-fit in 1,02 ±0,08 hole. For 1,52 → 2,54 thick board

8995

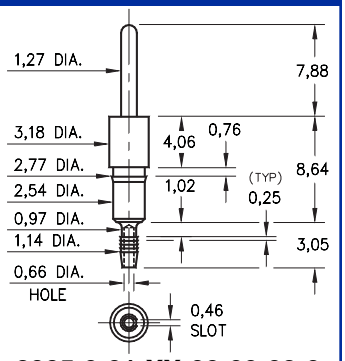

8995-0-01-XX-00-00-03-0
Compliant press-fit in 1,02 ±0,08 hole. For 1,52 → 2,54 thick board

1933

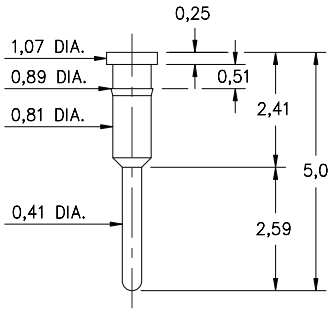

1933-0-00-XX-00-00-03-0
Press-fit in 0,86 mounting hole

1935

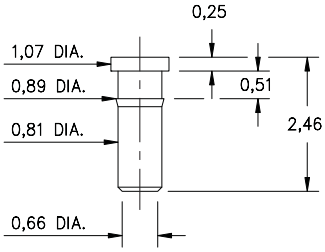

1935-0-00-XX-00-00-03-0
Press-fit in 0,86 mounting hole

SPECIFICATIONS

PIN MATERIAL:
Brass Alloy 360, 1/2 Hard
(Except where noted)

DIMENSION IN INCHES
TOLERANCES ON:
LENGTHS: ±0,13
DIAMETERS: ±0,05
ANGLES: ± 2°

ORDER CODE: XXXX - X - XX - XX - 00 - 00 - 0X - 0

BASIC PART #

SPECIFY PIN FINISH:
01 5,08µm TIN/LEAD OVER NICKEL
80 5,08µm TIN OVER NICKEL ◇
15 0,25µm GOLD OVER NICKEL ◇
21 0,51µm GOLD OVER NICKEL ◇
34 1,27µm GOLD OVER NICKEL ◇

RoHS 2002/95/EC

3406

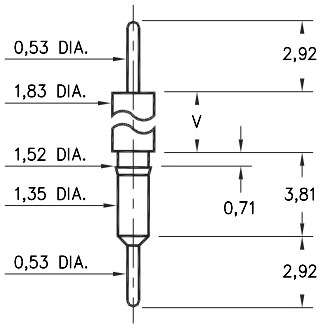

Basic Part Number	Shoulder Height V
3406-0	8,89

340X-0-00-XX-00-00-03-0
Press-fit in 1,45 mounting hole

0315

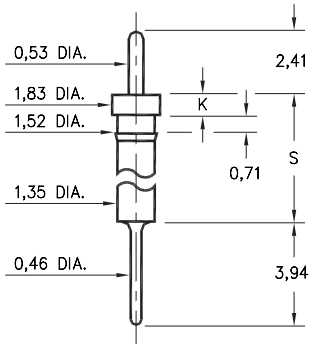

Basic Part Number	Head Height K	Stand-off Height S
0315-0	0,76	4,83
0315-1	1,02	10,92

0315-X-00-XX-00-00-03-0
Press-fit in 1,45 mounting hole
Pin material is Ph Br 544 (B2)

5503/5509

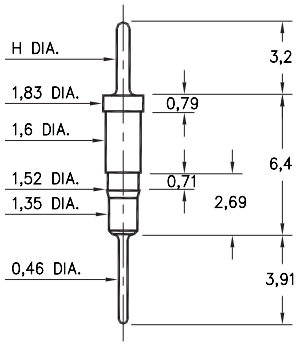

Basic Part Number	Pin Diameter H
5503-0	0,64
5509-0	0,46

550X-0-00-XX-00-00-03-0
Press-fit in 1,45 mounting hole

5504/5505

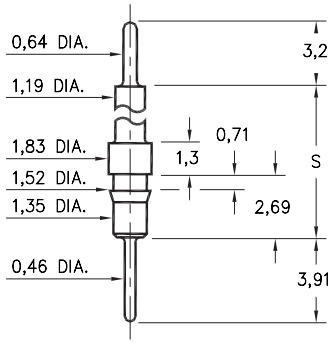

Basic Part Number	Standoff Height S
5504-0	8,41
5505-0	15,39

550X-0-00-XX-00-00-03-0
Press-fit in 1,45 mounting hole

3409

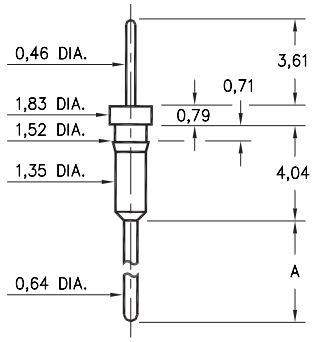

Basic Part Number	Pin Length A
3409-1	5,33
3409-2	10,67

3409-X-00-XX-00-00-03-0
Press-fit in 1,45 mounting hole

5011

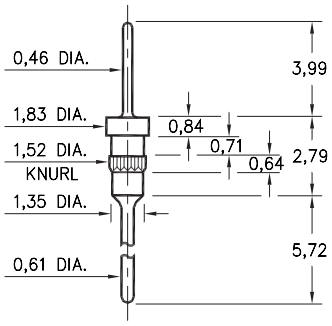

5011-0-00-XX-00-00-03-0
Press-fit in 1,45 mounting hole

5113

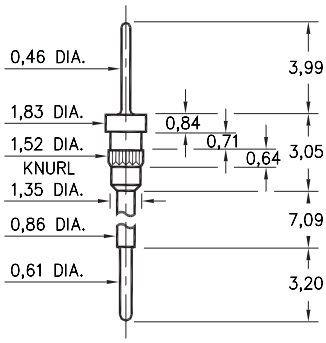

5113-0-00-XX-00-00-03-0
Press-fit in 1,45 mounting hole

SPECIFICATIONS

PIN MATERIAL:
Brass Alloy 360, 1/2 Hard
(Except where noted)

DIMENSION IN INCHES
TOLERANCES ON:
LENGTHS: ±0,13
DIAMETERS: ±0,05
ANGLES: ± 2°

ORDER CODE: XXXX - X - 00 - XX - 00 - 00 - 03 - 0

BASIC PART #

SPECIFY PIN FINISH:
01 5,08µm TIN/LEAD OVER NICKEL
80 5,08µm TIN OVER NICKEL ◇
15 0,25µm GOLD OVER NICKEL ◇
21 0,51µm GOLD OVER NICKEL ◇
34 1,27µm GOLD OVER NICKEL ◇

RoHS 2002/95/EC

3400⇨3402/3405/3410

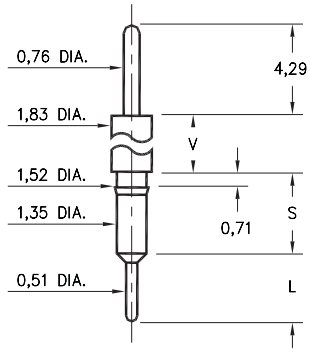

Basic Part Number	Shoulder Height V	Length S	Length L
3402-0	1,32	3,51	2,92
3401-0	2,54	3,45	2,92
3405-0	4,29	3,71	2,92
3400-0	12,21	3,68	2,92
3410-0	23,72	3,45	3,15

34XX-0-00-XX-00-00-03-0
Press-fit in 1,45 mounting hole

3411

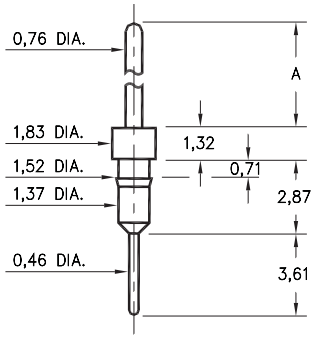

Basic Part Number	Pin Length A
3411-0	10,59
3411-1	5,51

3411-X-00-XX-00-00-03-0
Press-fit in 1,45 mounting hole

0600

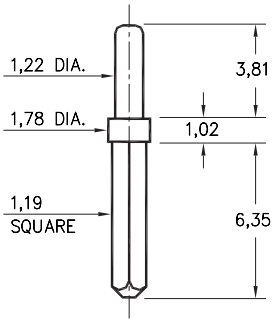

0600-0-05-XX-00-00-01-0
Solder mount in 1,32 mounting hole

0290

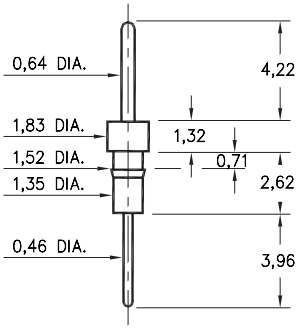

0290-0-00-XX-00-00-03-0
Press-fit in 1,45 mounting hole

7007

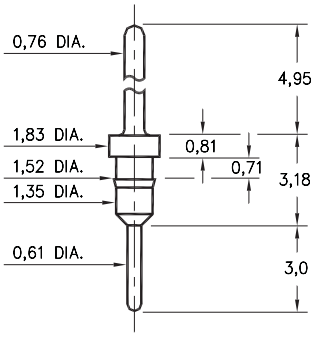

7007-0-00-XX-00-00-03-0
Press-fit in 1,45 mounting hole

5016

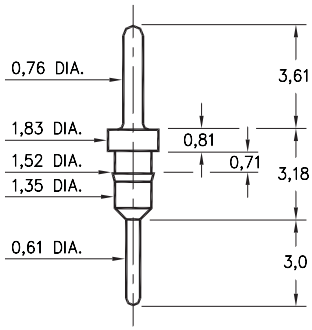

5016-0-00-XX-00-00-03-0
Press-fit in 1,45 mounting hole

5005

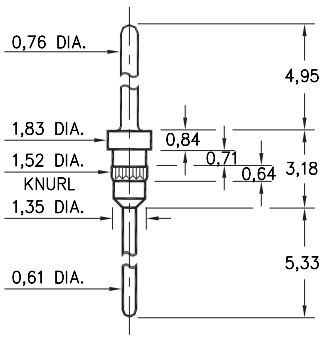

5005-0-00-XX-00-00-03-0
Press-fit in 1,45 mounting hole

5107

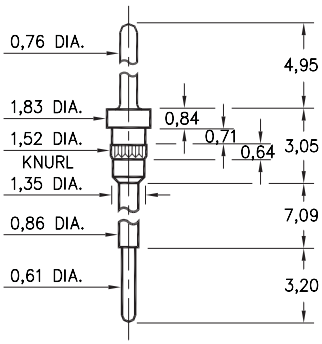

5107-0-00-XX-00-00-03-0
Press-fit in 1,45 mounting hole

8919

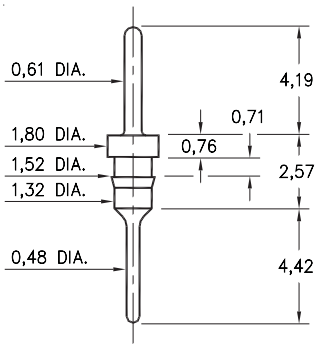

8919-0-00-XX-00-00-03-0
Press-fit in 1,45 mounting hole

3077

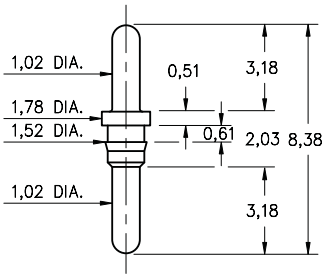

3077-0-00-XX-00-00-03-0
Press-fit in 1,45 mounting hole

SPECIFICATIONS

PIN MATERIAL:
Brass Alloy 360, 1/2 Hard
(Except where noted)

DIMENSION IN INCHES
TOLERANCES ON:
LENGTHS: ±0,13
DIAMETERS: ±0,05
ANGLES: ± 2°

ORDER CODE: XXXX - X - 0X - XX - 00 - 00 - 0X - 0

BASIC PART #

SPECIFY PIN FINISH:
01 5,08µm TIN/LEAD OVER NICKEL
80 5,08µm TIN OVER NICKEL ◇
15 0,25µm GOLD OVER NICKEL ◇
21 0,51µm GOLD OVER NICKEL ◇
34 1,27µm GOLD OVER NICKEL ◇

RoHS 2002/95/EC

3408

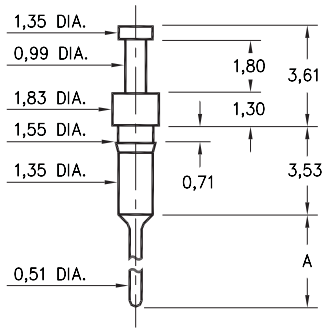

Basic Part Number	Pin Length A
3408-1	3,07
3408-2	4,60

3408-X-00-XX-00-00-03-0
Press-fit in 1,45 mounting hole

0270/0282

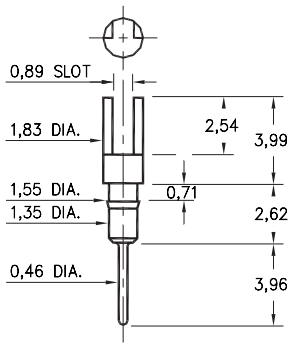

Basic Part Number	Pin Material
0270-0	Ph Br 544 (B2)
0282-0	Brass 360

02XX-0-01-XX-00-00-03-0
Press-fit in 1,45 mounting hole

0700

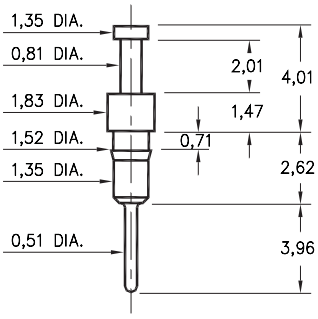

0700-0-00-XX-00-00-03-0
Press-fit in 1,45 mounting hole

8006

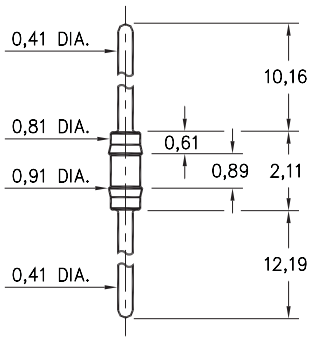

8006-0-00-XX-00-00-03-0
Press-fit in 0,86 mounting hole

0265

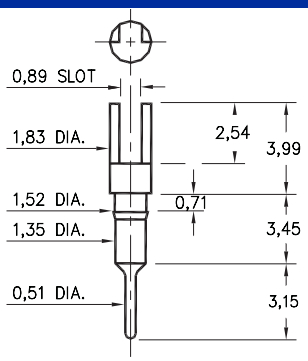

0265-0-01-XX-00-00-03-0
Press-fit in 1,45 mounting hole

0275

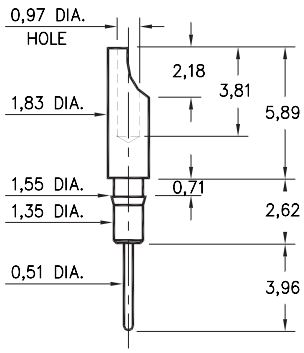

0275-0-01-XX-00-00-03-0
Press-fit in 1,45 mounting hole
Pin material is Ph. Br. 544 (B2)

0272

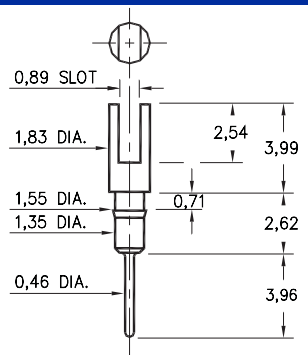

0272-0-01-XX-00-00-03-0
Press-fit in 1,45 mounting hole

8000

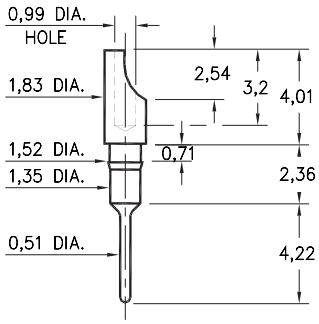

8000-0-01-XX-00-00-03-0
Press-fit in 1,45 mounting hole

3603

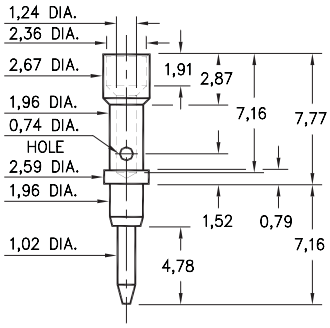

3603-0-07-XX-00-00-08-0
Annealed
#20 Crimp barrel

9976

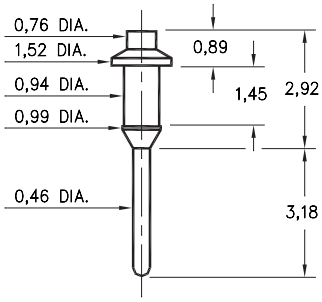

9976-0-00-XX-00-00-03-0
Press-fit in 0,97 mounting hole

SPECIFICATIONS

PIN MATERIAL:
Brass Alloy 360, 1/2 Hard
(Except where noted)

DIMENSION IN INCHES
TOLERANCES ON:
LENGTHS: ±0,13
DIAMETERS: ±0,05
ANGLES: ± 2°

ORDER CODE: XXXX - X - 0X - XX - 00 - 00 - 0X - 0

BASIC PART #

SPECIFY PIN FINISH:
01 5,08µm TIN/LEAD OVER NICKEL
80 5,08µm TIN OVER NICKEL ◇
15 0,25µm GOLD OVER NICKEL ◇
21 0,51µm GOLD OVER NICKEL ◇
34 1,27µm GOLD OVER NICKEL ◇

RoHS 2002/95/EC

3117

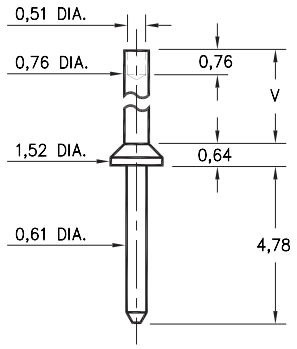

Basic Part Number	Board Thickness	Length V
3117-1	0,79	1,19
3117-2	1,57	1,98
3117-3	2,39	2,79
3117-4	3,18	3,58

3117-X-00-XX-00-00-08-0
Swage mount in 0,89 hole

3114/3115

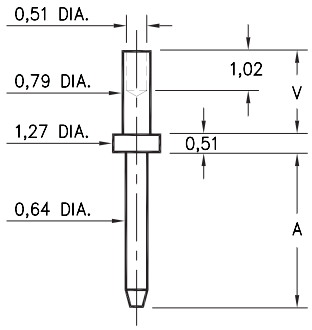

Basic Part Number	Board Thick-ness	Length A	Length V
3114-1	0,79	3,81	1,30
3114-2	1,57	3,81	2,08
3115-1	0,79	7,62	1,30
3115-2	1,57	7,62	2,08

311X-X-00-XX-00-00-08-0
Swage mount in 0,89 mounting hole

3112

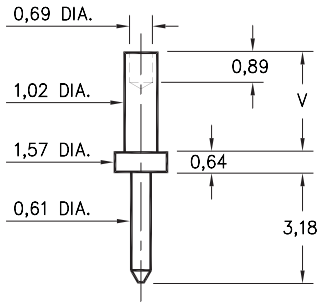

Basic Part Number	Board Thickness	Length V
3112-1	0,79	1,30
3112-2	1,57	2,08
3112-3	2,39	2,87

3112-X-00-XX-00-00-08-0
Swage mount in 1,09 hole

3118/3119

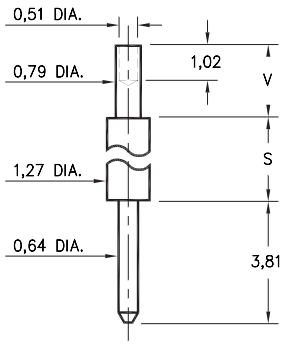

Basic Part Number	Board Thick-ness	Length S	Length V
3118-1	0,79	4,32	1,30
3118-2	1,57	4,32	2,08
3119-1	0,79	10,67	1,30
3119-2	1,57	10,67	2,08

311X-X-00-XX-00-00-08-0
Swage mount in 0,89 hole

3139

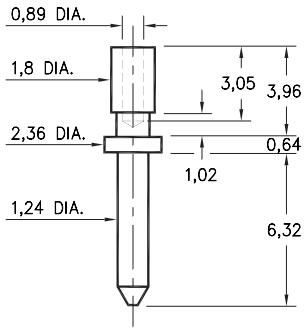

3139-0-00-XX-00-00-08-0
Wire Termination

3602

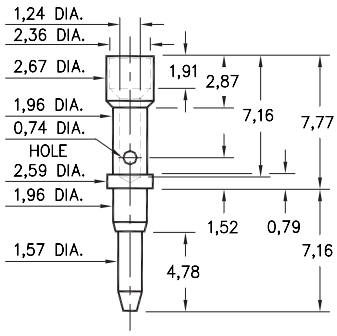

3602-0-07-XX-00-00-08-0
Annealed
#20 Crimp barrel

3131

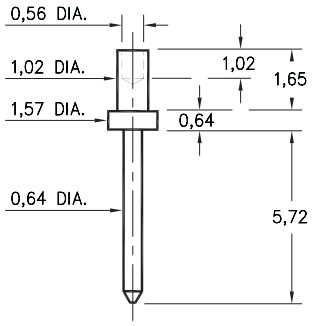

3131-1-00-XX-00-00-08-0
Swage mount in 1,09 hole

0912

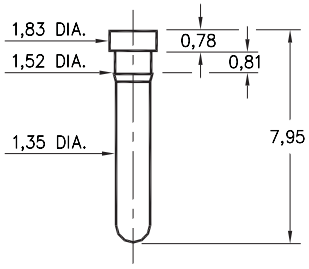

0912-0-00-XX-00-00-03-0
Press-fit in 1,45 mounting hole

SPECIFICATIONS

PIN MATERIAL:
Brass Alloy 360, 1/2 Hard
(Except Swage pins which are annealed)

DIMENSION IN INCHES
TOLERANCES ON:
LENGTHS: ±0,13
DIAMETERS: ±0,05
ANGLES: ± 2°

ORDER CODE: XXXX - X - 0X - XX - 00 - 00 - 0X - 0

BASIC PART #

SPECIFY PIN FINISH:
01 5,08µm TIN/LEAD OVER NICKEL
80 5,08µm TIN OVER NICKEL ◇
15 0,25µm GOLD OVER NICKEL ◇
21 0,51µm GOLD OVER NICKEL ◇
34 1,27µm GOLD OVER NICKEL ◇

RoHS 2002/95/EC

5102

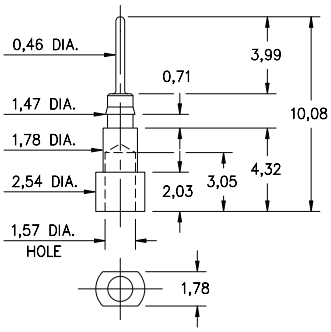

5102-0-00-XX-00-00-33-0
Press-fit in 1,45 mounting hole

1502

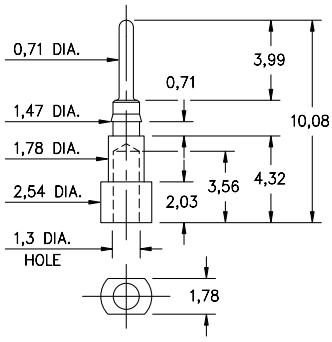

1502-0-00-XX-00-00-03-0
Press-fit in 1,45 mounting hole

2956-0

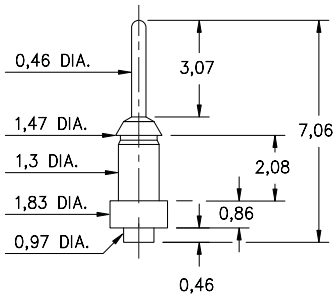

2956-0-00-XX-00-00-03-0
Surface mount

2956-1

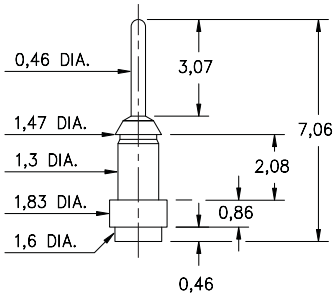

2956-1-00-XX-00-00-03-0
Surface mount

8940

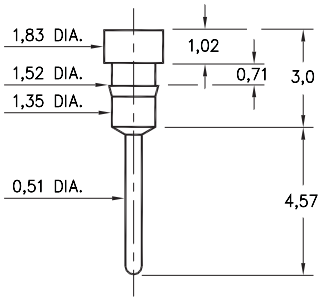

8940-0-00-XX-00-00-03-0
Press-fit in 1,45 mounting hole

8876

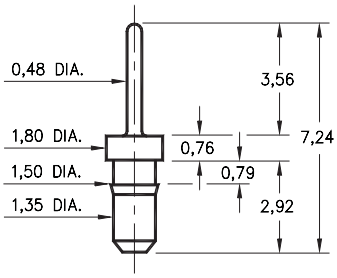

8876-0-00-XX-00-00-03-0
Press-fit in 1,45 mounting hole

0259/0286/1941

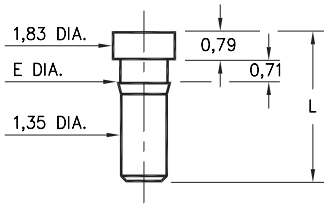

Basic Part Number	Length L	Barb Dia. E	Mounting Hole
0259-0	4,39	1,57	1,5
0286-0	2,92	1,52	1,45
1941-0	4,29	1,47	1,45

02XX-0-00-XX-00-00-03-0
Press-fit in 1,45/1,5 mounting hole

1938

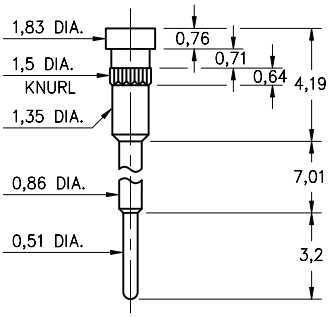

1938-0-00-XX-00-00-03-0
Press-fit in 1,45 mounting hole

1940

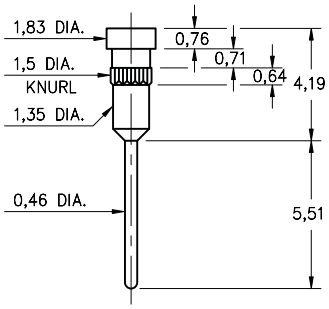

1940-0-00-XX-00-00-03-0
Press-fit in 1,45 mounting hole

1942

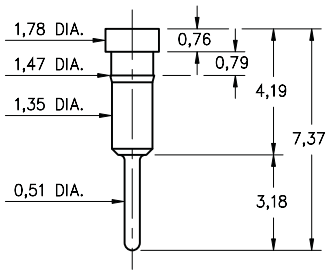

1942-0-00-XX-00-00-03-0
Press-fit in 1,45 mounting hole

3024

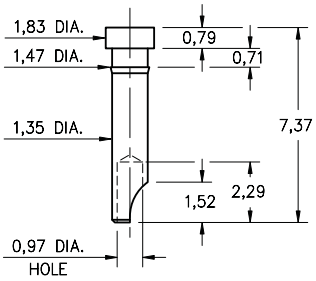

3024-0-01-XX-00-00-03-0
Press-fit in 1,45 mounting hole

SPECIFICATIONS

PIN MATERIAL:
Brass Alloy 360, 1/2 Hard
(Except Swage pins which are annealed)

DIMENSION IN INCHES
TOLERANCES ON:
LENGTHS: ±0,13
DIAMETERS: ±0,05
ANGLES: ± 2°

ORDER CODE: XXXX - X - XX - XX - 00 - 00 - 0X - 0

BASIC PART #

SPECIFY PIN FINISH:
01 5,08µm TIN/LEAD OVER NICKEL
80 5,08µm TIN OVER NICKEL ◇
15 0,25µm GOLD OVER NICKEL ◇
21 0,51µm GOLD OVER NICKEL ◇
34 1,27µm GOLD OVER NICKEL ◇

RoHS 2002/95/EC

3130/3134/3151

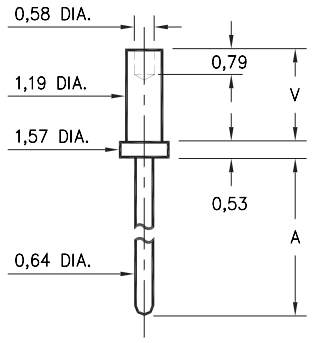

Basic Part Number	Board Thick-ness	Length A	Length V
3134-1	0,79	2,01	1,30
3134-2	1,57	2,01	2,08
3134-3	2,39	2,01	2,87
3134-4	3,18	2,01	3,68
3130-1	0,79	4,55	1,30
3130-2	1,57	4,55	2,08
3130-3	2,39	4,55	2,87
3130-4	3,18	4,55	3,68
3151-1	0,79	12,17	1,30
3151-2	1,57	12,17	2,08
3151-3	2,39	12,17	2,87
3151-4	3,18	12,17	3,68

31XX-X-00-XX-00-00-08-0
Swage mount in 1,32 hole

3113

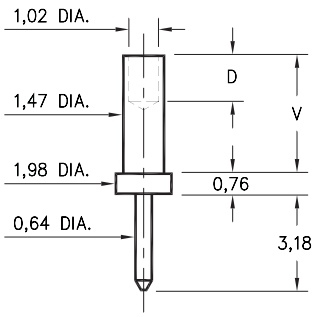

Basic Part Number	Board Thick-ness	Length V	Depth D
3113-1	0,79	1,57	1,02
3113-2	1,57	2,39	1,57
3113-3	2,39	3,18	1,57
3113-4	3,18	3,96	1,57

3113-X-00-XX-00-00-08-0
Swage mount in 1,57 hole

3360

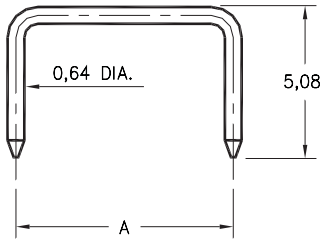

Basic Part Number	Pin Centers A
3360-1	5,08
3360-2	6,35
3360-3	7,62
3360-4	10,16
3360-5	12,7

3360-X-14-XX-00-00-08-0
Shorting Jumper

3301⇒ 3304

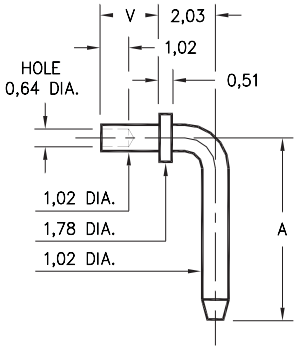

Basic Part Number	Pin Centers A
3301-X	6,53
3302-X	9,07
3303-X	9,53
3304-X	14,27

- X -	Board Thickness	Length V
1	0,79	1,30
2	1,57	2,08
3	2,39	2,87

330X-X-14-XX-00-00-08-0
Specify board thickness
Swage mount in 1,09 hole

3620

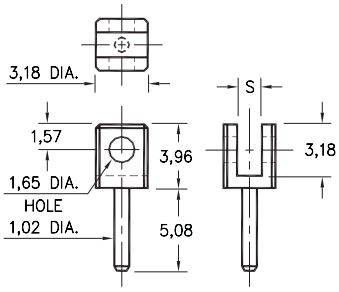

Basic Part Number	Board Thickness	Slot S
3620-1	0,79	1,19
3620-2	1,57	1,91

3620-X-32-XX-00-00-08-0
Board edge rivet mount

0940

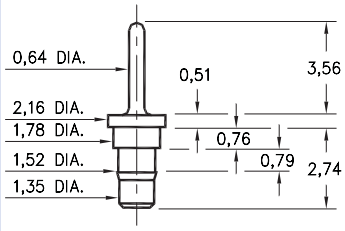

0940-0-00-XX-00-00-03-0
Press-fit in 1,45 mounting hole

3621

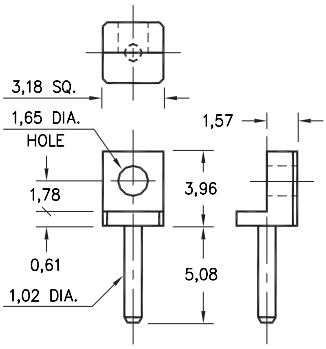

3621-0-32-XX-00-00-08-0
Board edge rivet mount

SPECIFICATIONS

PIN MATERIAL:
Brass Alloy 360, 1/2 Hard
(Except Swage pins which are annealed)

DIMENSION IN INCHES
TOLERANCES ON:
LENGTHS: ±0,13
DIAMETERS: ±0,05
ANGLES: ± 2°

ORDER CODE: XXXX - X - XX - XX - 00 - 00 - 0X - 0

BASIC PART #

SPECIFY PIN FINISH:
01 5,08µm TIN/LEAD OVER NICKEL
80 5,08µm TIN OVER NICKEL ◇
15 0,25µm GOLD OVER NICKEL ◇
21 0,51µm GOLD OVER NICKEL ◇
34 1,27µm GOLD OVER NICKEL ◇

RoHS 2002/95/EC

3110/3111

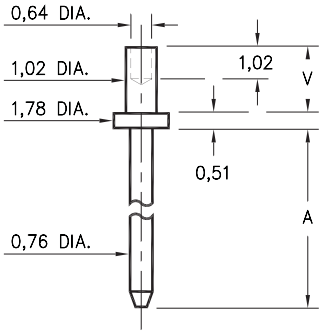

Basic Part Number	Board Thick-ness	Length A	Length V
3110-1	0,79	3,81	1,30
3110-2	1,57	3,81	2,08
3110-3	2,39	3,81	2,87
3111-1	0,79	7,62	1,30
3111-2	1,57	7,62	2,08
3111-3	2,39	7,62	2,87

311X-X-00-XX-00-00-08-0
Swage mount in 1,09 hole

3150

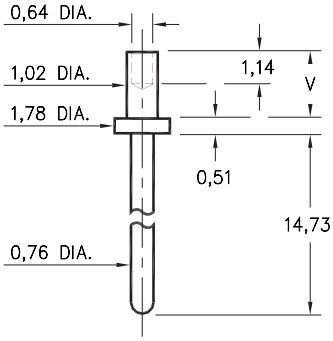

Basic Part Number	Board Thickness	Length V
3150-1	0,79	1,30
3150-2	1,57	2,08

3150-X-00-XX-00-00-08-0
Swage mount in 1,09 mounting hole

3136/3137

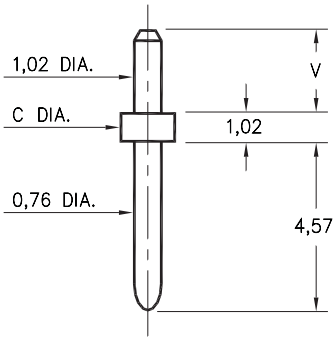

Basic Part Number	Flange Dia. C	Board Thick-ness	Length V
3136-1	1,98	1,57	2,08
3136-2		2,39	2,79
3136-3		3,18	3,68
3137-1	1,57	1,57	2,08
3137-2		2,39	2,79
3137-3		3,18	3,68
3137-4		3,96	4,70

313X-X-00-XX-00-00-08-0
Solder mount in 1,09 mounting hole

3148

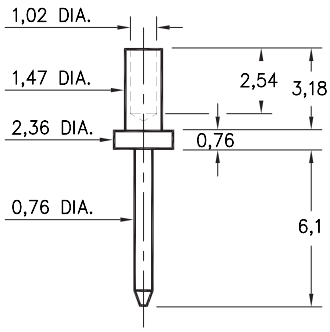

3148-3-00-XX-00-00-08-0
Swage mount in 1,57 hole
for 2,39 thick board

8815

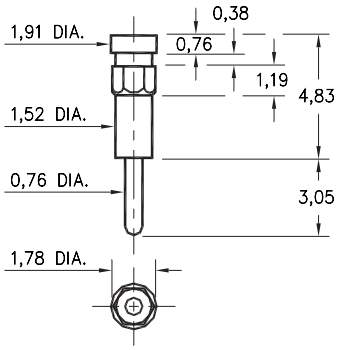

8815-0-00-XX-00-00-03-0
Hex press-fit in 1,68
plated thru hole

6821

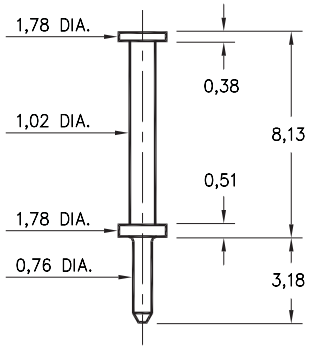

6821-0-00-XX-00-00-08-0
Wire Termination

3132

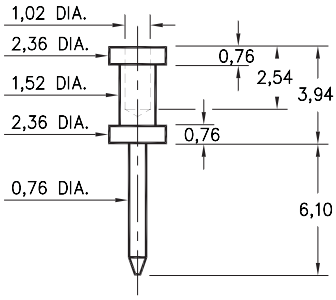

3132-0-00-XX-00-00-08-0
Wire Termination
Material is annealed

5601

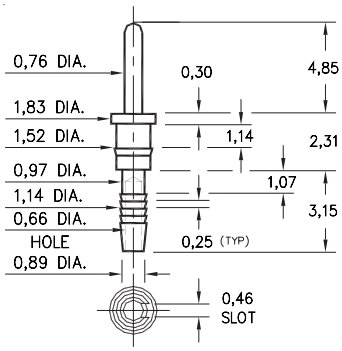

5601-0-01-XX-00-00-03-0
Compliant press-fit in 1,02±0,08 plated hole. For 1,52→2,54 thick board.

5602

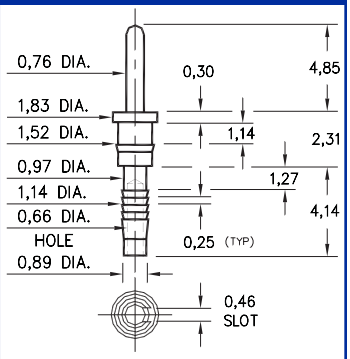

5602-0-01-XX-00-00-03-0
Compliant press-fit in 1,02±0,08 plated hole. For 2,29→3,30 thick board.

SPECIFICATIONS

PIN MATERIAL:
Brass Alloy 360, 1/2 Hard
(Except Swage pins which are annealed)

DIMENSION IN INCHES
TOLERANCES ON:
LENGTHS: ±0,13
DIAMETERS: ±0,05
ANGLES: ± 2°

ORDER CODE: XXXX - X - 0X - XX - 00 - 00 - 0X - 0

BASIC PART #

SPECIFY PIN FINISH:
01 5,08µm TIN/LEAD OVER NICKEL
80 5,08µm TIN OVER NICKEL ◇
15 0,25µm GOLD OVER NICKEL ◇
21 0,51µm GOLD OVER NICKEL ◇
34 1,27µm GOLD OVER NICKEL ◇

RoHS 2002/95/EC

3120

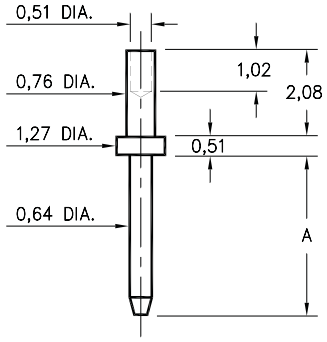

Basic Part Number	Length A
3120-1	5,21
3120-2	6,35

3120-X-00-XX-00-00-08-0
Swage mount in 0,86 mounting hole

3122 ⇒ 3153

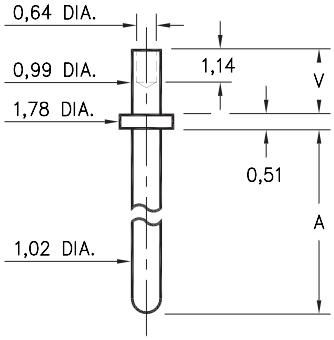

Basic Part Number	Pin Length A
3153-X	4,57
3141-X	5,84
3122-X	7,11
3149-X	9,65
3123-X	14,73
3140-X	19,81
3124-X	22,35

- X -	Board Thickness	Length V
1	0,79	1,3
2	1,57	2,08

31XX-X-00-XX-00-00-08-0
Swage mount in 1.09 hole

3101 ⇒ 3106

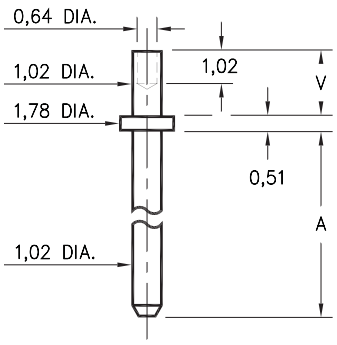

Basic Part Number	Pin Length A
3101-X	3,81
3102-X	4,78
3103-X	7,62
3104-X	12,7
3105-X	19,05
3106-X	25,40

- X -	Board Thickness	Length V
1	0,79	1,30
2	1,57	2,08
3	2,39	2,87

310X-X-00-XX-00-00-08-0
Swage mount in 1,09 hole

3221 ⇒ 3223

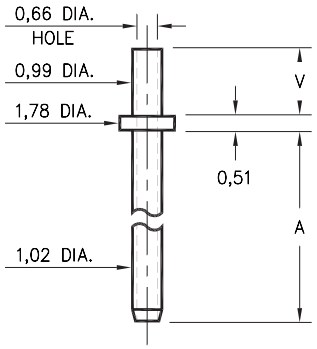

Basic Part Number	Pin Length A
3221-X	2,54
3222-X	3,81
3223-X	7,62

- X -	Board Thickness	Length V
1	0,79	1,30
2	1,57	2,08
3	2,39	2,87

322X-X-00-XX-00-00-08-0
Swage mount in 1,09 hole

3125/3126

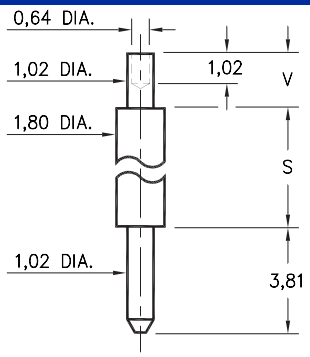

Basic Part Number	Pin Length S
3125-X	4,32
3126-X	10,67

- X -	Board Thickness	Length V
1	0,79	1,30
2	1,57	2,08
3	2,39	2,87

312X-X-00-XX-00-00-08-0
Swage mount in 1,09 hole

0995

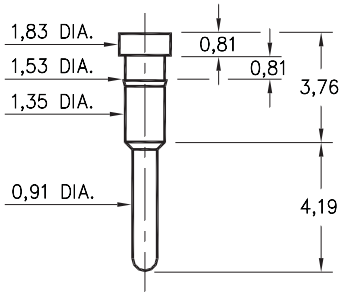

0995-0-00-XX-00-00-03-0
Press-fit in 1,45 mounting hole

4526

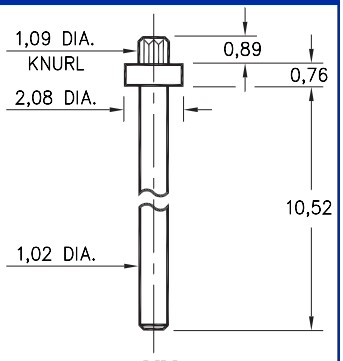

4526-0-00-XX-00-00-03-0
Press-fit in 1,02 mounting hole

SPECIFICATIONS

PIN MATERIAL:
Brass Alloy 360, 1/2 Hard
(Except Swage pins which are annealed)

DIMENSION IN INCHES
TOLERANCES ON:
LENGTHS: ±0,13
DIAMETERS: ±0,05
ANGLES: ± 2°

ORDER CODE: XXXX - X - 00 - XX - 00 - 00 - 0X - 0

BASIC PART #

SPECIFY PIN FINISH:
01 5,08µm TIN/LEAD OVER NICKEL
80 5,08µm TIN OVER NICKEL ◇
15 0,25µm GOLD OVER NICKEL ◇
21 0,51µm GOLD OVER NICKEL ◇
34 1,27µm GOLD OVER NICKEL ◇

RoHS 2002/95/EC

8600/8954/8955

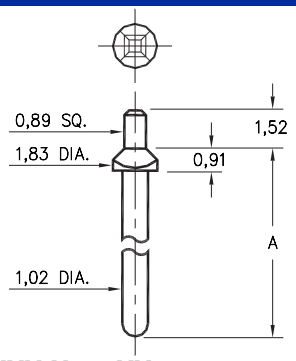

Basic Part Number	Pin Length A
8600-0	10,16
8600-1	21,59
8600-2	30,48
8954-0	3,45
8955-0	16,64

8XXX-X-05-XX-00-00-03-0
Square press-fit in 1,09 plated thru hole

3159

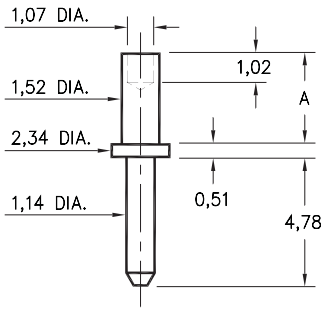

Basic Part Number	Board Thickness	Length V
3159-1	0,79	1,57
3159-2	1,57	2,39
3159-3	2,39	3,18
3159-4	3,18	3,96

3159-X-00-XX-00-00-08-0
Swage mount in 1,63 hole

8952

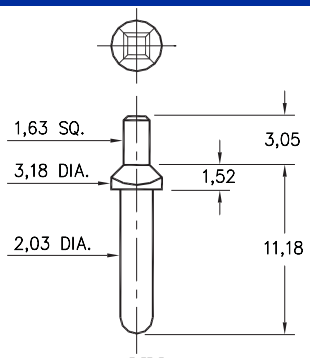

8952-0-05-XX-00-00-03-0
Square press-fit in 2,21 plated thru hole

8953

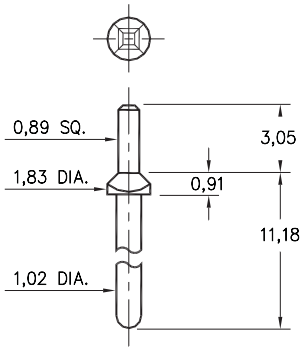

8953-0-05-XX-00-00-03-0
Square press-fit in 1,19 plated thru hole

3230

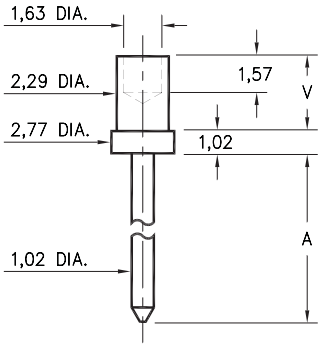

Basic Part Number	Board Thick-ness	Length A	Length V
3230-1	0,79	5,13	1,65
3230-2	1,57	5,79	2,41
3230-3	2,39	6,55	3,18
3230-4	3,18	7,32	3,94

3230-X-00-XX-00-00-08-0
Swage mount in 2,39 hole

3146

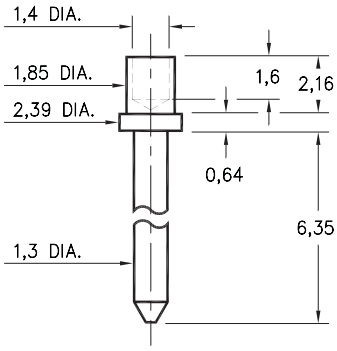

3146-2-00-XX-00-00-08-0
Swage mount in 1,93 hole.
For 1,57 thick board

3142

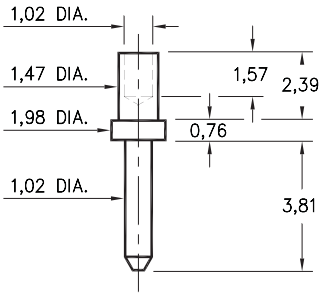

3142-2-00-XX-00-00-08-0
Swage mount in 1,57 hole.
For 1,57 thick board

3232

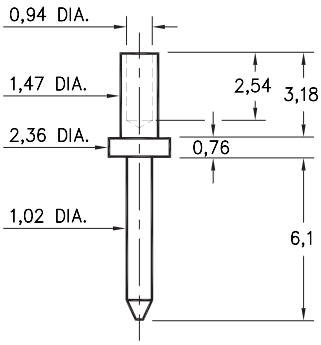

3232-3-00-XX-00-00-08-0
Swage mount in 1,57 hole.
For 2,39 thick board

3145

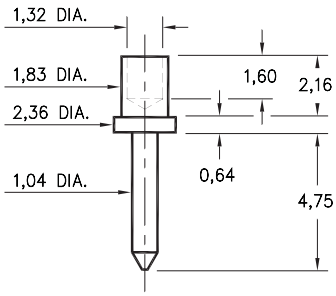

3145-2-00-XX-00-00-08-0
Swage mount in 1,93 hole.
For 1,57 thick board

SPECIFICATIONS

PIN MATERIAL:
Brass Alloy 360, 1/2 Hard
(Except Swage pins which are annealed)

DIMENSION IN INCHES
TOLERANCES ON:
LENGTHS: ±0,13
DIAMETERS: ±0,05
ANGLES: ± 2°

ORDER CODE: XXXX - X - 0X - XX - 00 - 00 - 0X - 0

BASIC PART #

SPECIFY PIN FINISH:
01 5,08µm TIN/LEAD OVER NICKEL
80 5,08µm TIN OVER NICKEL ◇
15 0,25µm GOLD OVER NICKEL ◇
21 0,51µm GOLD OVER NICKEL ◇
34 1,27µm GOLD OVER NICKEL ◇

RoHS 2002/95/EC

3231

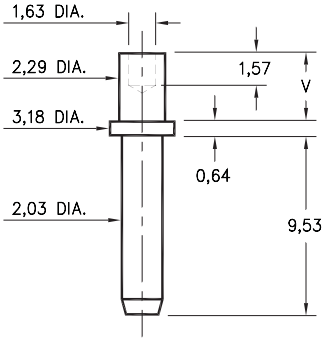

Basic Part Number	Board Thickness	Length V
3231-2	1,57	2,39
3231-3	2,39	3,18
3231-4	3,18	3,96

3231-X-00-XX-00-00-08-0
Swage mount in 2,39 hole.

3609

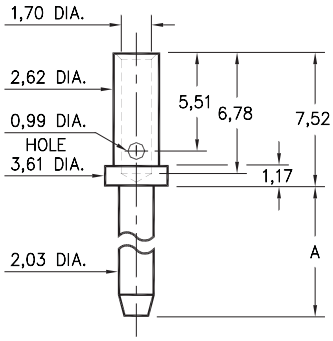

Basic Part Number	Pin Length A
3609-1	5,08
3609-2	9,53
3609-3	12,7

3609-X-07-XX-00-00-08-0
#16A Crimp barrel

3601

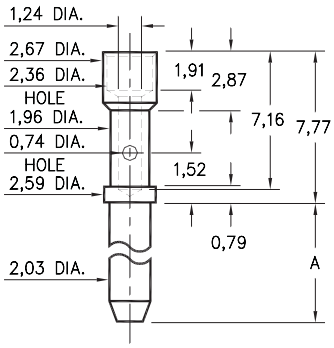

Basic Part Number	Pin Length A
3601-1	5,08
3601-2	9,53
3601-3	12,7

3601-X-07-XX-00-00-08-0
#20A Crimp barrel

3133/3138/3152

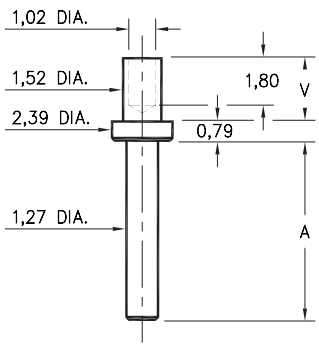

Basic Part Number	Pin Length A
3152-X	2,39
3133-X	5,56
3138-X	7,16

- X -	Board Thickness	Length V
1	0,79	1,60
2	1,57	2,39
3	2,39	3,18
4	3,18	3,96

31XX-X-00-XX-00-00-08-0
Specify board thickness
Swage mount in 1,63 hole

3144

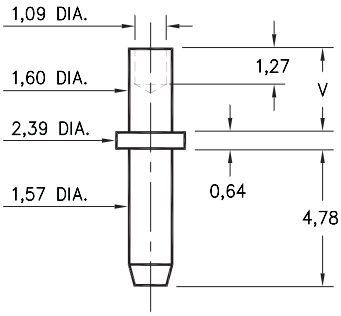

Basic Part Number	Board Thickness	Length V
3144-1	0,79	1,35
3144-2	1,57	2,13
3144-3	2,39	2,92

3144-X-00-XX-00-00-08-0
Swage mount in 1,70 hole.

3233

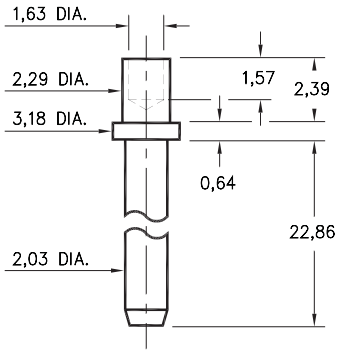

3233-2-00-XX-00-00-08-0
Swage mount in 2,39 hole.
For 1,57 thick board.

0520

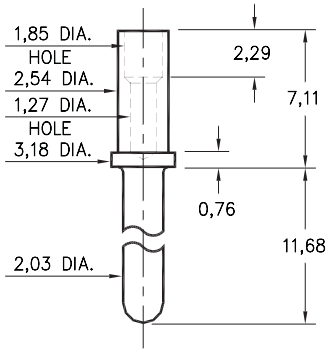

0520-0-00-XX-00-00-03-0
Annealed
#18 Gage crimp barrel

SPECIFICATIONS

PIN MATERIAL:
Brass Alloy 360, 1/2 Hard
(Except Swage pins which are annealed)

DIMENSION IN INCHES
TOLERANCES ON:
LENGTHS: ±0,13
DIAMETERS: ±0,05
ANGLES: ± 2°

ORDER CODE: XXXX - X - 0X - XX - 00 - 00 - 0X - 0

BASIC PART #

SPECIFY PIN FINISH:
01 5,08µm TIN/LEAD OVER NICKEL
80 5,08µm TIN OVER NICKEL ◇
15 0,25µm GOLD OVER NICKEL ◇
21 0,51µm GOLD OVER NICKEL ◇
34 1,27µm GOLD OVER NICKEL ◇

RoHS 2002/95/EC

5231

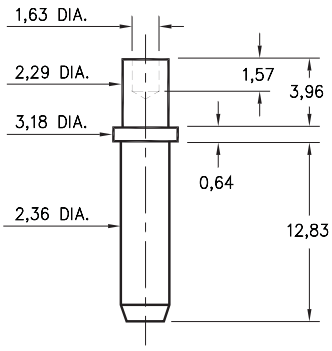

5231-0-00-XX-00-00-38-0
Swage mount in 2,39 hole.
For 3,18 thick board.

9092

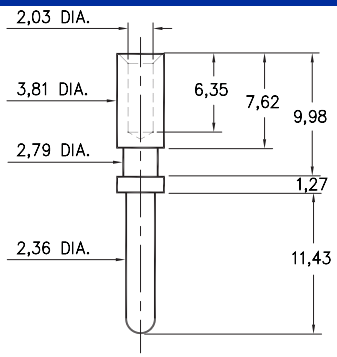

9092-0-00-XX-00-00-38-0
Wire Termination.

7310

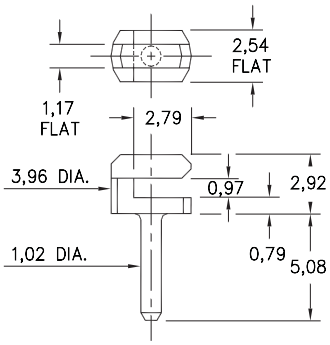

7310-0-01-XX-00-00-08-0
Board edge press-fit

SPECIFICATIONS

PIN MATERIAL:
Brass Alloy 360, 1/2 Hard
(Except Swage pins which are annealed)

DIMENSION IN INCHES
TOLERANCES ON:
LENGTHS: ±0,13
DIAMETERS: ±0,05
ANGLES: ± 2°

ORDER CODE: XXXX - X - 00 - XX - 00 - 00 - 38 - 0

BASIC PART #

SPECIFY PIN FINISH:
01 5,08µm TIN/LEAD OVER NICKEL
80 5,08µm TIN OVER NICKEL ◇
15 0,25µm GOLD OVER NICKEL ◇
21 0,51µm GOLD OVER NICKEL ◇
34 1,27µm GOLD OVER NICKEL ◇

RoHS 2002/95/EC

5275

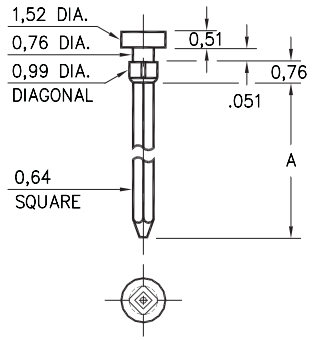

Basic Part Number	# of Wraps	Wrapost Length A
5275-1	1	9,40
5275-2	2	11,94
5275-3	3	15,49

5275-X-05-XX-00-00-01-0
Square press-fit in 0,89 plated thru hole

1010 ⇒ 1012/1020 ⇒ 1022

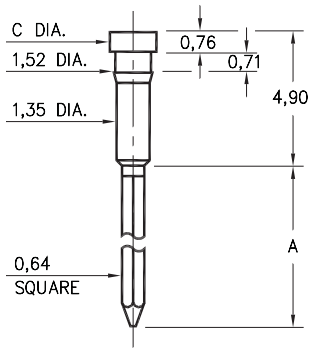

Basic Part Number	# of Wraps	Wrapost Length A	Head Dia. C
1012-1	1	6,60	
1011-2	2	9,14	1,83
1010-3	3	12,7	
1022-1	1	6,60	
1021-2	2	9,14	1,57
1020-3	3	12,7	

10XX-X-05-XX-00-00-01-0
Press-fit in 1,45 mounting hole

1215

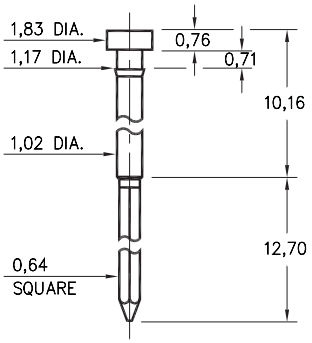

1215-3-05-XX-00-00-01-0
Press-fit in 1,09 mounting hole

1124

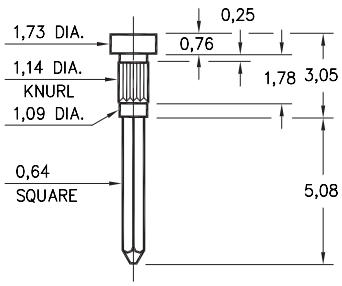

1124-0-05-XX-00-00-01-0
Press-fit in 1,09 mounting hole

1210

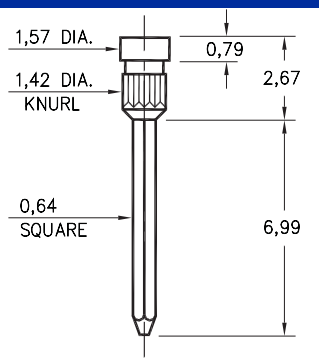

1210-0-05-XX-00-00-01-0
Press-fit in 1,35 mounting hole

1222

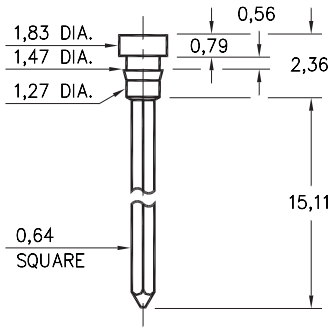

1222-0-05-XX-00-00-01-0
Press-fit in 1,40 mounting hole

1221

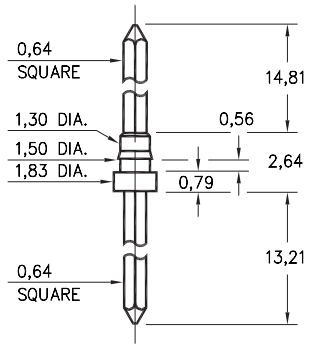

1221-0-05-XX-00-00-01-0
Press-fit in 1,42 mounting hole

1110

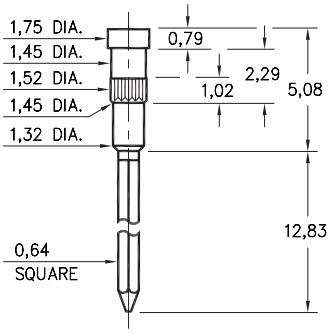

1110-3-05-XX-00-00-01-0
Press-fit in 1,45 mounting hole

1094

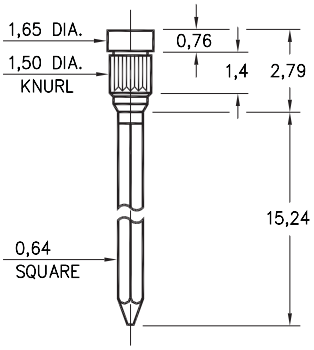

1094-0-05-XX-00-00-01-0
Press-fit in 1,42 mounting hole

SPECIFICATIONS

PIN MATERIAL:
Brass Alloy 360, 1/2 Hard

DIMENSION IN INCHES
TOLERANCES ON:
LENGTHS: ±0,13
DIAMETERS: ±0,05
ANGLES: ± 2°

ORDER CODE: XXXX - X - 05 - XX - 00 - 00 - 01 - 0

BASIC PART #

SPECIFY PIN FINISH:
01 5,08µm TIN/LEAD OVER NICKEL
80 5,08µm TIN OVER NICKEL ◇
15 0,25µm GOLD OVER NICKEL ◇
21 0,51µm GOLD OVER NICKEL ◇

RoHS 2002/95/EC

1030 ⇒ 1032

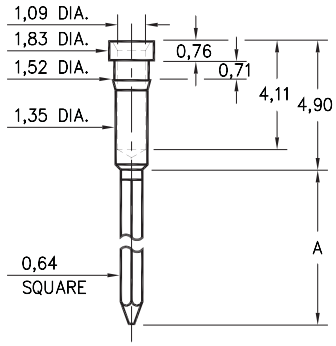

Basic Part Number	# of Wraps	Wrapost Length A
1032-1	1	6,60
1031-2	2	9,14
1030-3	3	12,7

103X-X-05-XX-00-00-01-0
Press-fit in 1,45 mounting hole

1216

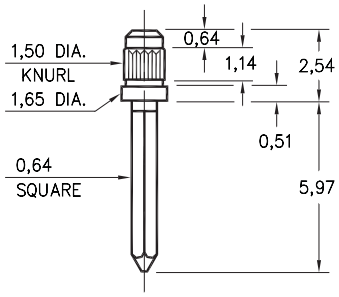

1216-0-05-XX-00-00-01-0
Press-fit in 1,42 mounting hole

1095

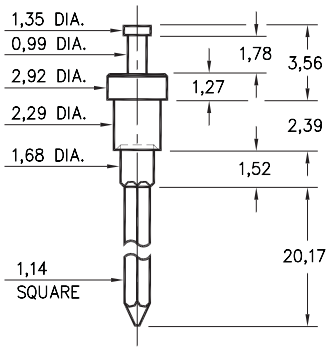

1095-0-05-XX-00-00-01-0
Swage mount in 2,39 hole
For 1,57 thick board

1214

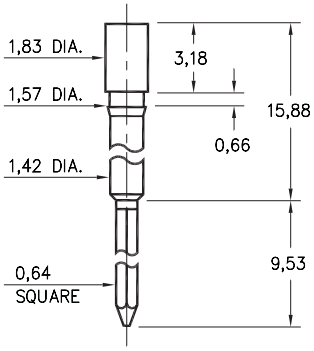

1214-0-05-XX-00-00-01-0
Press-fit in 1,50 mounting hole

1212

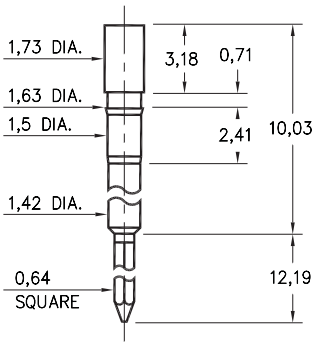

1212-0-05-XX-00-00-01-0
Press-fit in 1,55 mounting hole

1213

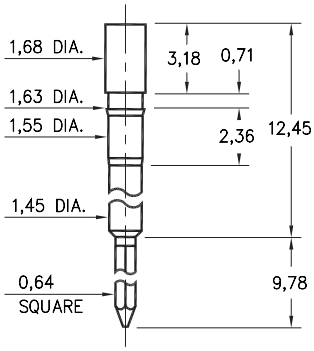

1213-0-05-XX-00-00-01-0
Press-fit in 1,55 mounting hole

0318

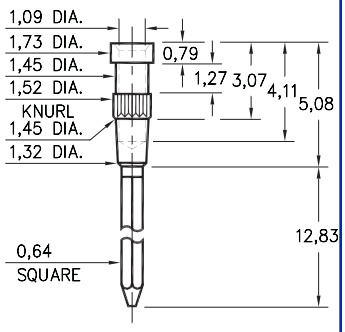

0318-3-05-XX-00-00-01-0
Press-fit in 1,45 mounting hole

1302

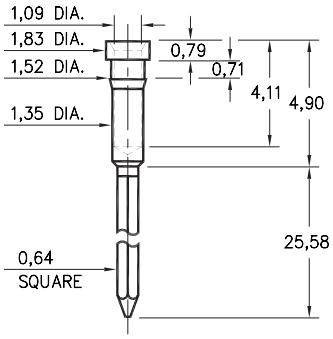

1302-0-05-XX-00-00-01-0
Press-fit in 1,45 mounting hole

1097

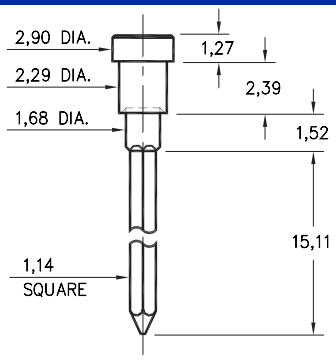

1097-0-05-XX-00-00-01-0
Swage mount in 2,39 hole
for 1,57 thick board

SPECIFICATIONS

PIN MATERIAL:
Brass Alloy 360, 1/2 Hard
Swage pins are annealed

DIMENSION IN INCHES
TOLERANCES ON:
LENGTHS: ±0,13
DIAMETERS: ±0,05
ANGLES: ± 2°

ORDER CODE: XXXX - X - 05 - XX - 00 - 00 - 01 - 0

BASIC PART #

SPECIFY PIN FINISH:
01 5,08µm TIN/LEAD OVER NICKEL
80 5,08µm TIN OVER NICKEL ◇
15 0,25µm GOLD OVER NICKEL ◇
21 0,51µm GOLD OVER NICKEL ◇

RoHS 2002/95/EC

8301

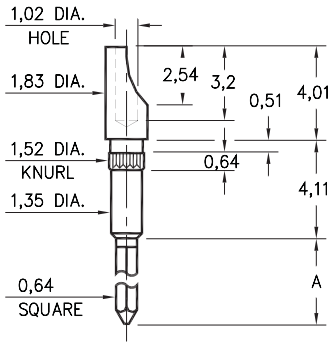

Basic Part Number	# of Wraps	Wrapost Length A
8301-2	2	9,40
8301-3	3	12,95

8301-X-24-XX-00-00-01-0
Press-fit in 1,45 mounting hole

1083

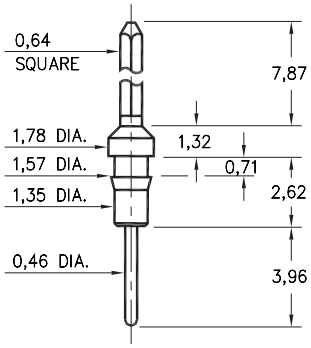

1083-0-05-XX-00-00-01-0
Press-fit in 1,50 mounting hole

5301

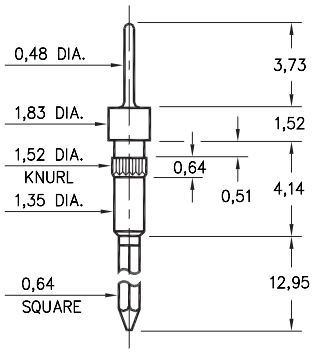

5301-0-05-XX-00-00-01-0
Press-fit in 1,45 mounting hole

1090

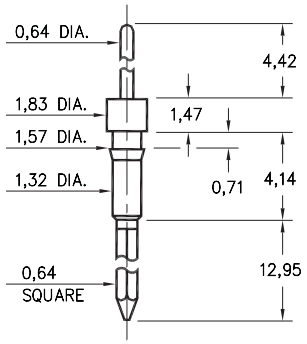

1090-0-05-XX-00-00-01-0
Press-fit in 1,50 mounting hole

8608

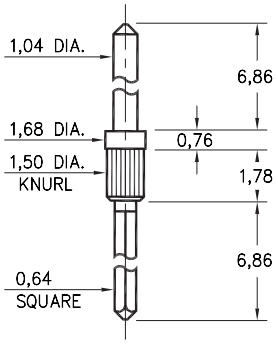

8608-0-05-XX-00-00-01-0
Press-fit in 1,42 mounting hole

SPECIFICATIONS

PIN MATERIAL:
Brass Alloy 360, 1/2 Hard

DIMENSION IN INCHES
TOLERANCES ON:
LENGTHS: ±0,13
DIAMETERS: ±0,05
ANGLES: ± 2°

ORDER CODE: XXXX - X - XX - XX - 00 - 00 - 01 - 0

BASIC PART #

SPECIFY PIN FINISH:
01 5,08µm TIN/LEAD OVER NICKEL
80 5,08µm TIN OVER NICKEL ◇
15 0,25µm GOLD OVER NICKEL ◇
21 0,51µm GOLD OVER NICKEL ◇

RoHS 2002/95/EC

1096

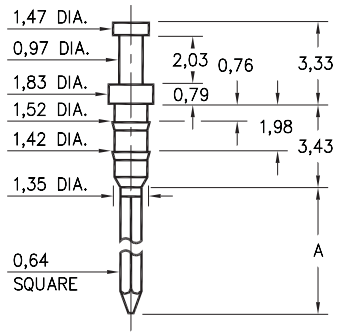

Basic Part Number	# of Wraps	Wrapost Length A
1096-2	2	9,68
1096-3	3	13,39

1096-X-05-XX-00-00-01-0
Press-fit in 1,45 mounting hole

1106

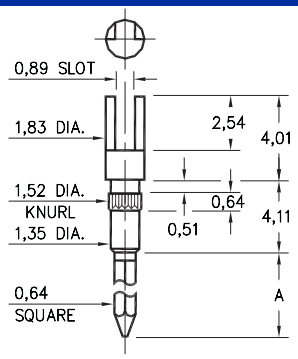

Basic Part Number	# of Wraps	Wrapost Length A
1106-2	2	9,40
1106-3	3	12,95

1106-X-23-XX-00-00-01-0
Press-fit in 1,45 mounting hole

1093

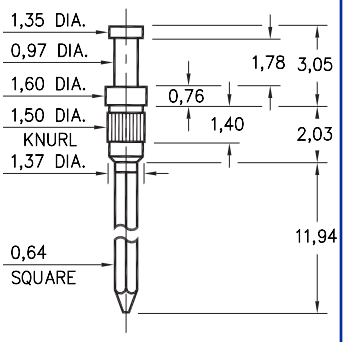

1093-0-05-XX-00-00-01-0
Press-fit in 1,42 mounting hole

0730

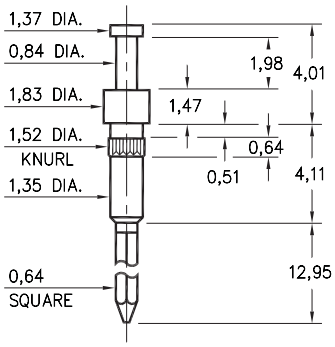

0730-3-05-XX-00-00-01-0
Press-fit in 1,45 mounting hole

1122

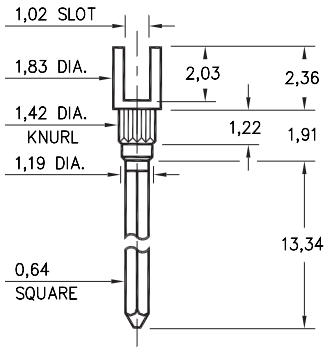

1122-0-22-XX-00-00-01-0
Press-fit in 1,35 mounting hole

1064

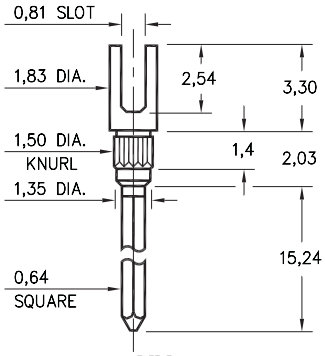

1064-0-23-XX-00-00-01-0
Press-fit in 1,42 mounting hole

1092

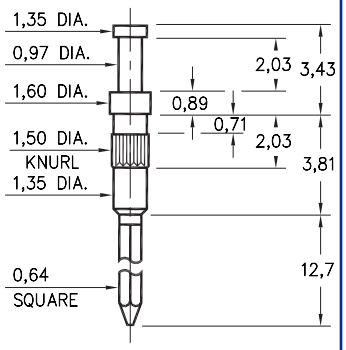

1092-0-05-XX-00-00-01-0
Press-fit in 1,42 mounting hole

1068

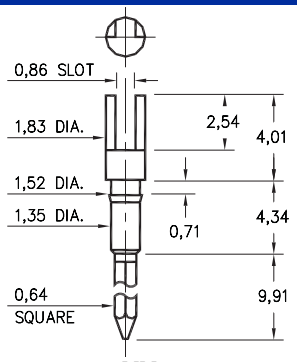

1068-0-23-XX-00-00-01-0
Press-fit in 1,45 mounting hole

1070 ⇒ 1072

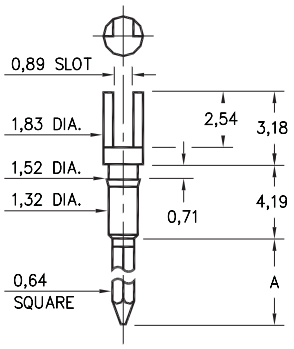

Basic Part Number	# of Wraps	Wrapost Length A
1072-1	1	6,60
1071-2	2	9,40
1070-3	3	12,95

107X-X-23-XX-00-00-01-0
Press-fit in 1,45 mounting hole

SPECIFICATIONS

PIN MATERIAL:
Brass Alloy 360, 1/2 Hard

DIMENSION IN INCHES
TOLERANCES ON:
LENGTHS: ±0,13
DIAMETERS: ±0,05
ANGLES: ± 2°

ORDER CODE: XXXX - X - XX - XX - 00 - 00 - 01 - 0

BASIC PART #

SPECIFY PIN FINISH:
01 5,08µm TIN/LEAD OVER NICKEL
80 5,08µm TIN OVER NICKEL ◇
15 0,25µm GOLD OVER NICKEL ◇
21 0,51µm GOLD OVER NICKEL ◇

RoHS 2002/95/EC

2111

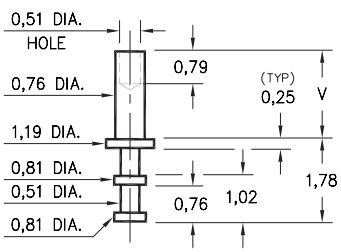

- X -	Board Thick-ness	Length V
1	0,79	1,35
2	1,57	2,13
3	2,39	2,92

2111-X-00-XX-00-00-07-0
Swage mount in 0,84 hole

2113

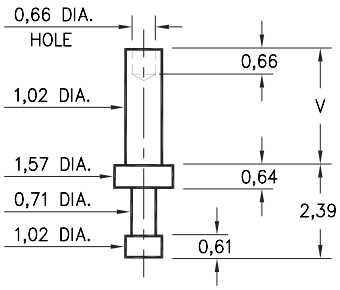

- X -	Board Thick-ness	Length V
1	0,79	1,35
2	1,57	2,13
3	2,39	2,92
4	3,18	3,73

2113-X-00-XX-00-00-07-0
Swage mount in 1,09 hole

2108

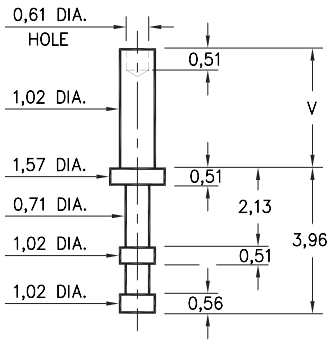

- X -	Board Thick-ness	Length V
1	0,78	1,35
2	1,57	2,13
3	2,39	2,92
4	3,18	3,73

2108-X-00-XX-00-00-07-0
Swage mount in 1,09 hole

2102

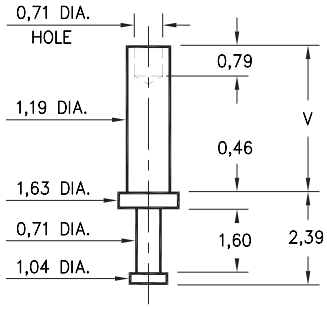

- X -	Board Thick-ness	Length V
5	0,41	0,89
1	0,79	1,37
2	1,57	2,13
3	2,39	2,92
4	3,18	3,73

2102-X-00-XX-00-00-07-0
Swage mount in 1,32 hole

2109

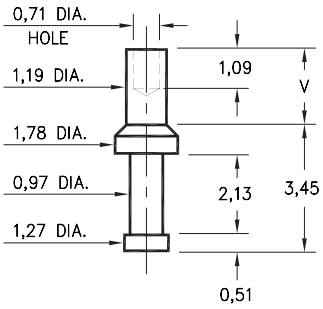

- X -	Board Thick-ness	Length V
1	0,79	1,32
2	1,57	2,16

2109-X-00-XX-00-00-07-0
Swage mount in 1,32 hole

2324

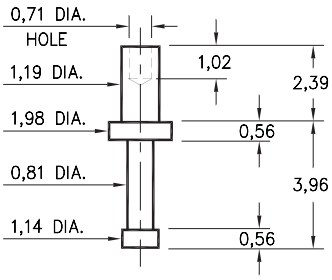

2324-2-00-XX-00-00-07-0
Swage mount in 1,32 hole
for 1,57 thick board

SPECIFICATIONS

PIN MATERIAL:
Brass Alloy 360, 1/2 Hard
Swage pins are annealed

DIMENSION IN INCHES
TOLERANCES ON:
LENGTHS: ±0,13
DIAMETERS: ±0,05
ANGLES: ± 2°

ORDER CODE: 2XXX - X - 00 - XX - 00 - 00 - 07 - 0

BASIC PART #

SPECIFY PIN FINISH:
01 5,08µm TIN/LEAD OVER NICKEL
80 5,08µm TIN OVER NICKEL ◇
44 7,62µm SILVER OVER COPPER ◇
50 7,62µm ELECTRO-SOLDER (60/40 SnPb)

RoHS 2002/95/EC

2312

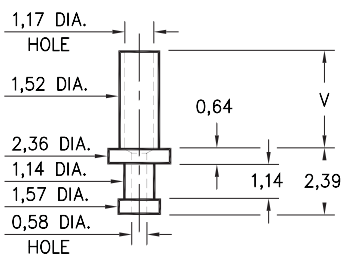

- X -	Board Thick-ness	Length V
1	0,79	1,35
2	1,57	2,39
3	2,39	2,92
4	3,18	3,73

2312-X-00-XX-00-00-07-0
Swage mount in 1,63 hole

2308

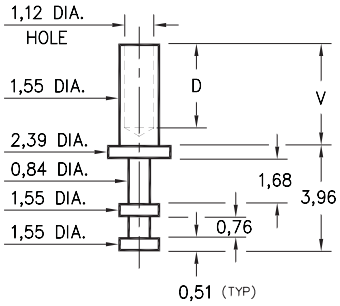

- X -	Board Thick-ness	Length V	Depth D
1	0,79	1,37	0,91
2	1,57	2,13	1,68
3	2,39	2,92	2,44
4	3,18	3,73	3,20

2308-X-00-XX-00-00-07-0
Swage in 1,63 mount hole

2707

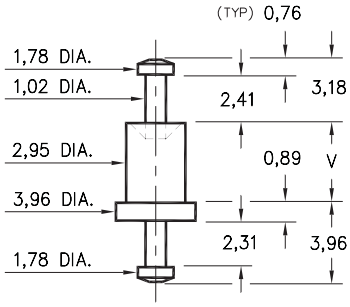

- X -	Board Thick-ness	Length V
1	0,79	1,57
2	1,57	2,39
3	2,39	3,18
4	3,18	3,96

2707-X-00-XX-00-00-07-0
Swage mount in 3,05 hole

2329

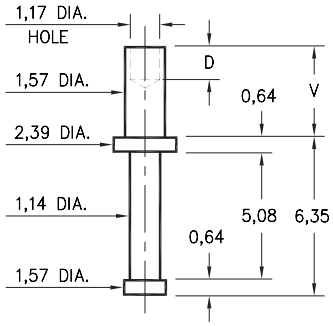

- X -	Board Thick-ness	Length V	Depth D
1	0,79	1,14	1,14
2	1,57	2,39	
3	2,39	3,18	1,57
4	3,18	3,96	

2329-X-00-XX-00-00-07-0
Swage mount in 1,70 hole

2510/2513

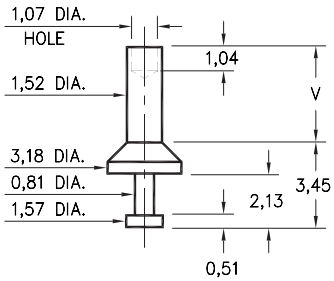

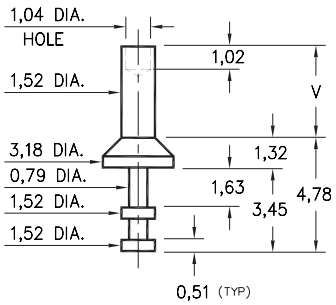

- X -	Board Thick-ness	Length V
1	0,79	1,57
2	1,57	2,39
3	2,39	3,18
4	3,18	3,96

2510-X-00-XX-00-00-07-0
Swage mount in 1,63 hole

2513-X-00-XX-00-00-07-0
Swage mount in 1,63 hole

SPECIFICATIONS

PIN MATERIAL:
Brass Alloy 360, 1/2 Hard
Swage pins are annealed

DIMENSION IN INCHES
TOLERANCES ON:
LENGTHS: ±0,13
DIAMETERS: ±0,05
ANGLES: ± 2°

ORDER CODE: 2XXX - X - 00 - XX - 00 - 00 - 07 - 0

BASIC PART #

SPECIFY PIN FINISH:
01 5,08µm TIN/LEAD OVER NICKEL
80 5,08µm TIN OVER NICKEL ◇
44 7,62µm SILVER OVER COPPER ◇
50 7,62µm ELECTRO-SOLDER (60/40 SnPb)

RoHS 2002/95/EC

2110

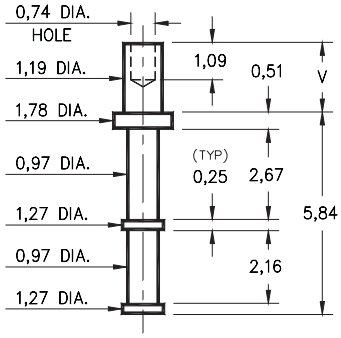

- X -	Board Thick-ness	Length V
1	0,79	1,24
2	1,57	2,08

2110-X-00-XX-00-00-07-0
Swage mount in 1,32 hole

2333

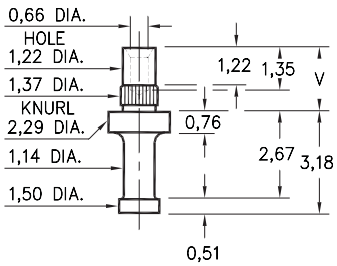

- X -	Board Thick-ness	Length V
1	1,98	2,62
2	1,57	2,21
3	1,19	1,83

2333-X-00-XX-00-00-07-0
Press-fit and swage in 1,32 mounting hole

2821

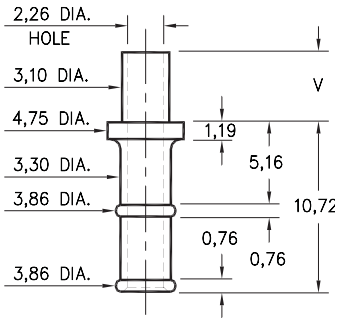

- X -	Board Thick-ness	Length V
2	1,57	2,77
3	2,39	3,58
4	3,18	4,37

2821-X-00-XX-00-00-07-0
Swage mount in 3,18 hole

2533

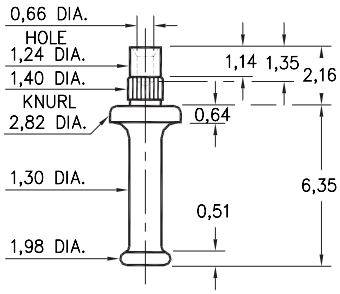

2533-0-00-XX-00-00-07-0
Press-fit & swage in 1,32 mounting hole. For 1,57 thick board

2101

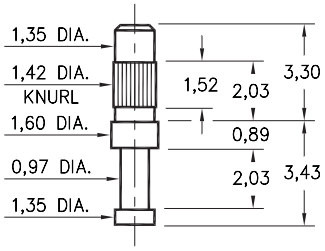

2101-3-00-XX-00-00-07-0
Press-fit in 1,35 mounting hole. For 1,57 to 2,39 thick board

2316/2317/2708

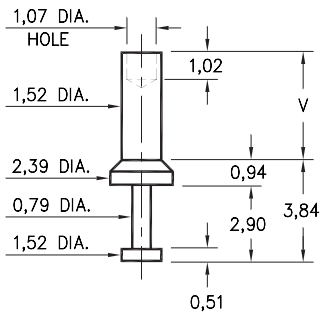

2316-X-00-XX-00-00-07-0
Swage mount in 1,63 hole

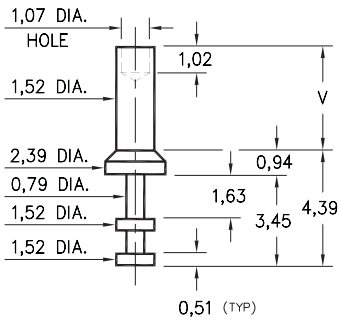

2317-X-00-XX-00-00-07-0
Swage mount in 1,63 hole

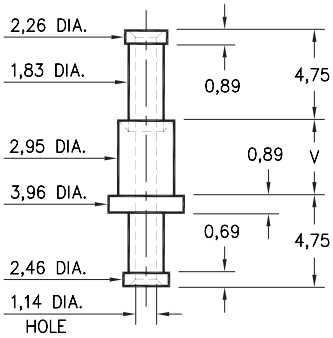

2708-X-00-XX-00-00-07-0
Swage mount in 3,05 hole

- X -	Board Thick-ness	Length V
1	0,79	1,57
2	1,57	2,39
3	2,39	3,18
4	3,18	3,96

SPECIFICATIONS

PIN MATERIAL:
Brass Alloy 360, 1/2 Hard
Swage pins are annealed

DIMENSION IN INCHES
TOLERANCES ON:
LENGTHS: ±0,13
DIAMETERS: ±0,05
ANGLES: ± 2°

ORDER CODE: 2XXX - X - 00 - XX - 00 - 00 - 07 - 0

BASIC PART #

SPECIFY PIN FINISH:
01 5,08µm TIN/LEAD OVER NICKEL
80 5,08µm TIN OVER NICKEL ◇
44 7,62µm SILVER OVER COPPER ◇
50 7,62µm ELECTRO-SOLDER (60/40 SnPb)

RoHS 2002/95/EC

2348/2301/2506

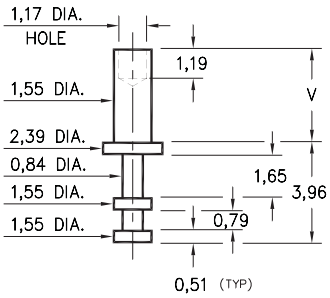

2348-X-00-XX-00-00-07-0
Swage mount in 1,63 hole

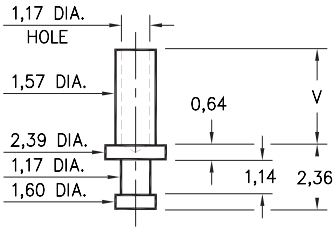

2301-X-00-XX-00-00-07-0
Swage mount in 1,70 hole

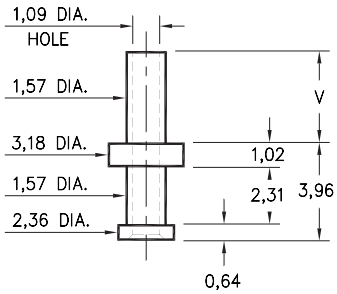

2506-X-00-XX-00-00-07-0
Swage mount in 1,70 hole

- X -	Board Thick-ness	Length V
1	0,79	1,35
2	1,57	2,13
3	2,39	2,92
4	3,18	3,73

2310

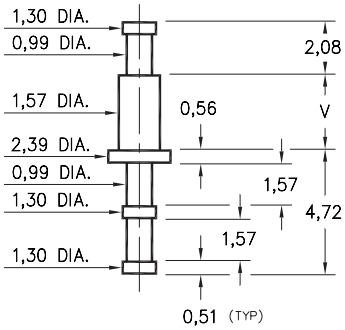

2310-X-00-XX-00-00-07-0
Swage mount in 1,70 hole

- X -	Board Thick-ness	Length V
1	0,79	1,35
2	1,57	2,08
3	2,39	2,87
4	3,18	3,68

2505

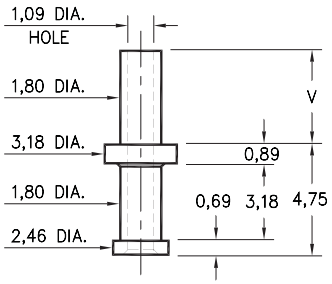

2505-X-00-XX-00-00-07-0
Swage mount in 1,93 hole

- X -	Board Thick-ness	Length V
1	0,79	1,57
2	1,57	2,36
3	2,39	3,18
4	3,18	3,96

2325/2355/2365

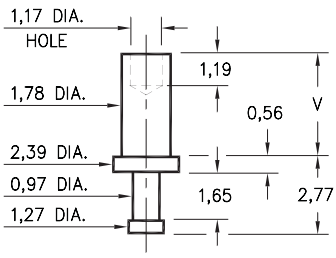

2325-X-00-XX-00-00-07-0
Swage mount in 1,85 hole

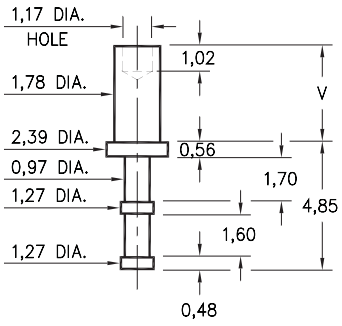

2355-X-00-XX-00-00-07-0
Swage mount in 1,85 hole

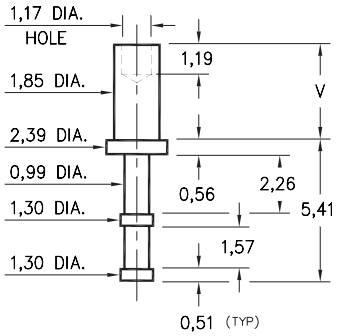

2365-X-00-XX-00-00-07-0
Swage mount in 1,93 hole

- X -	Board Thick-ness	Length V
1	0,79	1,35
2	1,57	2,13
3	2,39	2,92
4	3,18	3,73

SPECIFICATIONS

PIN MATERIAL:
Brass Alloy 360, 1/2 Hard
Swage pins are annealed

DIMENSION IN INCHES
TOLERANCES ON:
LENGTHS: ±0,13
DIAMETERS: ±0,05
ANGLES: ± 2°

ORDER CODE: 2XXX - X - 00 - XX - 00 - 00 - 07 - 0

BASIC PART #

SPECIFY PIN FINISH:
01 5,08µm TIN/LEAD OVER NICKEL
80 5,08µm TIN OVER NICKEL ◇
44 7,62µm SILVER OVER COPPER ◇
50 7,62µm ELECTRO-SOLDER (60/40 SnPb)

RoHS 2002/95/EC

2304/2305

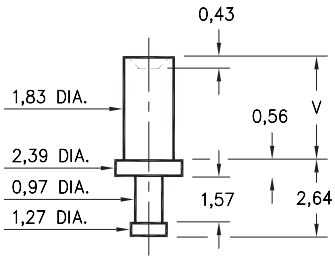

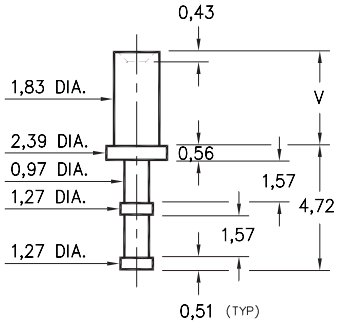

- X -	Board Thick-ness	Length V
1	0,79	1,30
2	1,57	2,08
3	2,39	2,87
4	3,18	3,68

2304-X-00-XX-00-00-07-0
Swage mount in 1,93 hole

2305-X-00-XX-00-00-07-0
Swage mount in 1,93 hole

2503

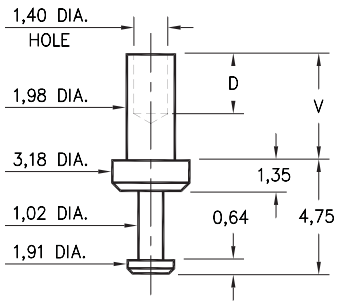

- X -	Board Thick-ness	Length V	Depth D
1	0,79	1,98	1,72
2	1,57	2,77	
3	2,39	3,58	2,49
4	3,18	4,37	

2503-X-00-XX-00-00-07-0
Swage mount in 2,08 hole

2704

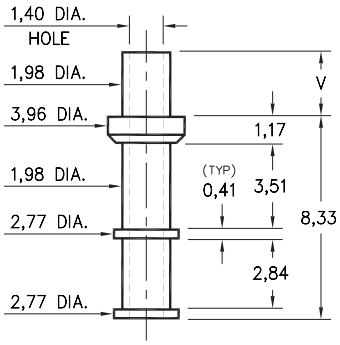

- X -	Board Thick-ness	Length V
1	0,79	1,91
2	1,57	2,67
3	2,39	3,43
4	3,18	4,19

2704-X-00-XX-00-00-07-0
Swage mount in 2,08 hole

2306/2307/2311

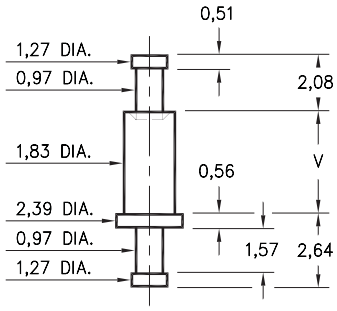

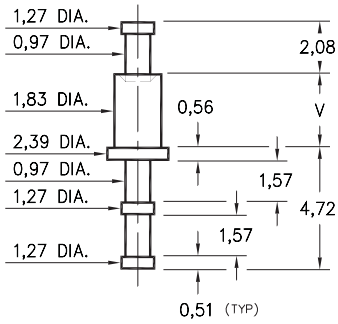

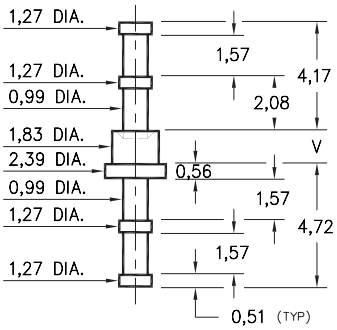

- X -	Board Thick-ness	Length V
1	0,79	1,30
2	1,57	2,08
3	2,39	2,87
4	3,18	3,68

2306-X-00-XX-00-00-07-0
Swage mount in 1,93 hole

2307-X-00-XX-00-00-07-0
Swage mount in 1,93 hole

2311-X-00-XX-00-00-07-0
Swage mount in 1,93 hole

SPECIFICATIONS

PIN MATERIAL:
Brass Alloy 360, 1/2 Hard
Swage pins are annealed

DIMENSION IN INCHES
TOLERANCES ON:
LENGTHS: ±0,13
DIAMETERS: ±0,05
ANGLES: ± 2°

ORDER CODE: 2XXX - X - 00 - XX - 00 - 00 - 07 - 0

BASIC PART #

SPECIFY PIN FINISH:
01 5,08µm TIN/LEAD OVER NICKEL
80 5,08µm TIN OVER NICKEL ◇
44 7,62µm SILVER OVER COPPER ◇
50 7,62µm ELECTRO-SOLDER (60/40 SnPb)

RoHS 2002/95/EC

2810

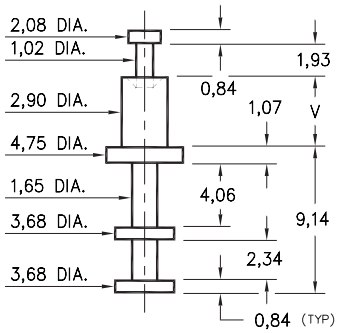

- X -	Board Thick-ness	Length V
2	1,57	2,67
3	2,39	3,43
4	3,18	4,19

2810-X-00-XX-00-00-07-0
Swage mount in 3,0 hole

2524

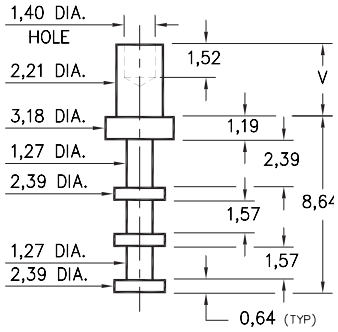

- X -	Board Thick-ness	Length V
1	0,79	1,91
2	1,57	2,67
3	2,39	3,43
4	3,18	4,19

2524-X-00-XX-00-00-07-0
Swage mount in 2,34 hole

2561/2508

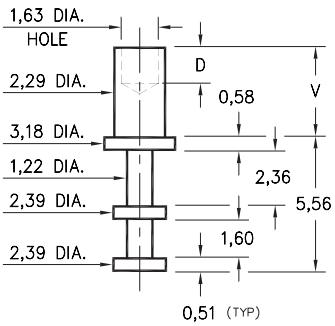

2561-X-00-XX-00-00-07-0
Swage mount in 2,39 hole

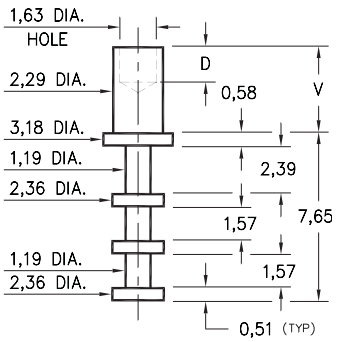

2508-X-00-XX-00-00-07-0
Swage mount in 2,39 hole

- X -	Board Thick-ness	Length V	Depth D
1	0,79	1,60	1,19
2	1,57	2,39	
3	2,39	3,18	1,57
4	3,18	3,96	

2551

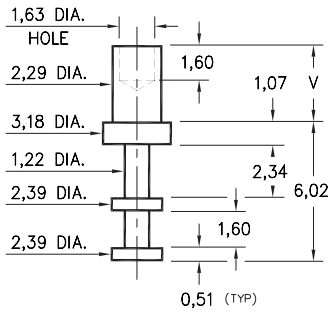

- X -	Board Thick-ness	Length V
1	0,79	1,91
2	1,57	2,67
3	2,39	3,43
4	3,18	4,19

2551-X-00-XX-00-00-07-0
Swage mount in 2,39 hole

2812

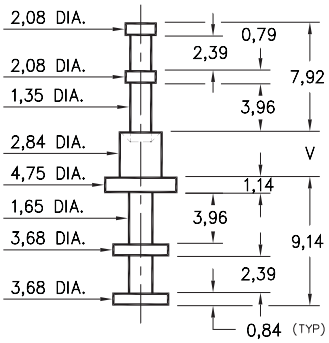

- X -	Board Thick-ness	Length V
1	1,57	2,67
2	2,39	3,43
3	3,18	4,19
4	4,78	5,84

2812-X-00-XX-00-00-07-0
Swage mount in 2,95 hole

SPECIFICATIONS

PIN MATERIAL:
Brass Alloy 360, 1/2 Hard
Swage pins are annealed

DIMENSION IN INCHES
TOLERANCES ON:
LENGTHS: ±0,13
DIAMETERS: ±0,05
ANGLES: ± 2°

ORDER CODE: 2XXX - X - 00 - XX - 00 - 00 - 07 - 0

BASIC PART #

SPECIFY PIN FINISH:
01 5,08µm TIN/LEAD OVER NICKEL
80 5,08µm TIN OVER NICKEL ◇
44 7,62µm SILVER OVER COPPER ◇
50 7,62µm ELECTRO-SOLDER (60/40 SnPb)

RoHS 2002/95/EC

2501

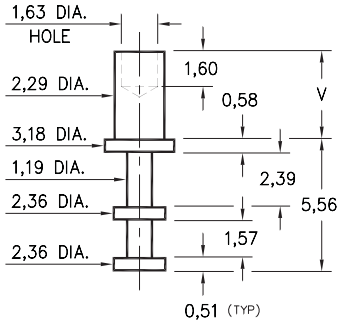

- X -	Board Thick-ness	Length V
1	0,79	1,98
2	1,57	2,77
3	2,39	3,56
4	3,18	4,34

2501-X-00-XX-00-00-07-0
Swage mount in 2,39 hole

2703

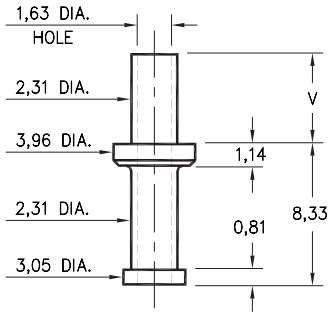

- X -	Board Thick-ness	Length V
1	0,79	1,96
2	1,57	2,72
3	2,39	3,48
4	3,18	4,24

2703-X-00-XX-00-00-07-0
Swage mount in 2,39 hole

2702

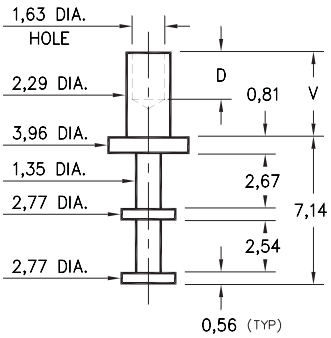

- X -	Board Thick-ness	Length V	Depth D
1	0,79	1,91	1,60
2	1,57	2,67	
3	2,39	3,43	2,36
4	3,18	4,19	

2702-X-00-XX-00-00-07-0
Swage mount in 2,39 hole

2710

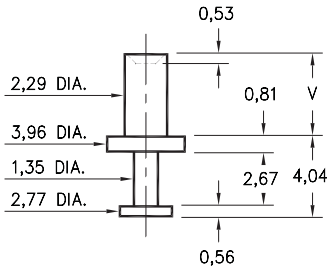

- X -	Board Thick-ness	Length V
1	0,79	1,57
2	1,57	2,39
3	2,39	3,18
4	3,18	3,96

2710-X-00-XX-00-00-07-0
Swage mount in 2,39 hole

2717/2713

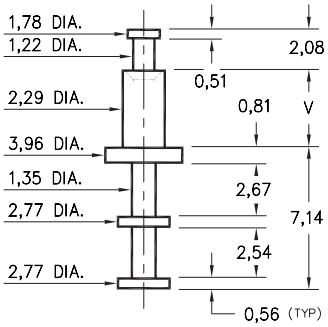

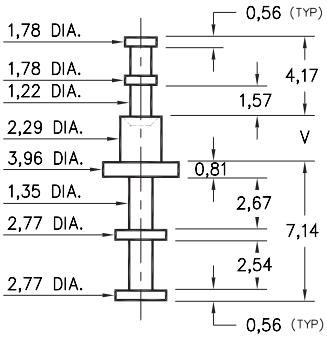

- X -	Board Thick-ness	Length V
1	0,79	1,57
2	1,57	2,39
3	2,39	3,18
4	3,18	3,96

2717-X-00-XX-00-00-07-0
Swage mount in 2,39 hole

2713-X-00-XX-00-00-07-0
Swage mount in 2,39 hole

SPECIFICATIONS

PIN MATERIAL:
Brass Alloy 360, 1/2 Hard
Swage pins are annealed

DIMENSION IN INCHES
TOLERANCES ON:
LENGTHS: ±0,13
DIAMETERS: ±0,05
ANGLES: ± 2°

ORDER CODE: 2XXX - X - 00 - XX - 00 - 00 - 07 - 0

BASIC PART #

SPECIFY PIN FINISH:
01 5,08µm TIN/LEAD OVER NICKEL
80 5,08µm TIN OVER NICKEL ◇
44 7,62µm SILVER OVER COPPER ◇
50 7,62µm ELECTRO-SOLDER (60/40 SnPb)

RoHS 2002/95/EC

2512

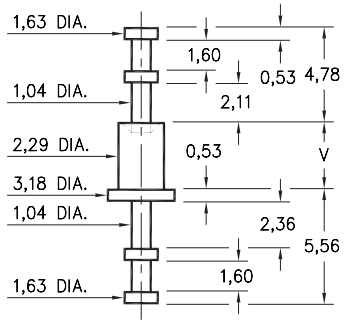

- X -	Board Thick-ness	Length V
1	0,79	1,57
2	1,57	2,39
3	2,39	3,18
4	3,18	3,96

2512-X-00-XX-00-00-07-0
Swage mount in 2,39 hole

2705

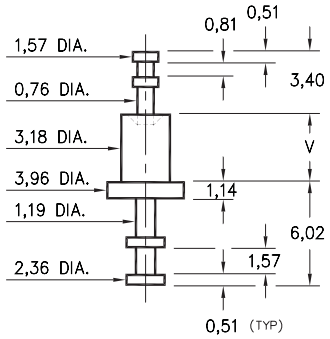

- X -	Board Thick-ness	Length V
1	0,79	1,91
2	1,57	2,67
3	2,39	3,43
4	3,18	4,19

2705-X-00-XX-00-00-07-0
Swage mount in 3,28 hole

2803

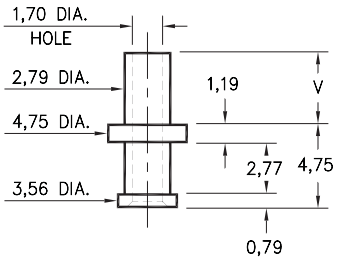

- X -	Board Thick-ness	Length V
1	0,79	1,98
2	1,57	2,77
3	2,39	3,56
4	3,18	4,34

2803-X-00-XX-00-00-07-0
Swage mount in 2,87 hole

2815

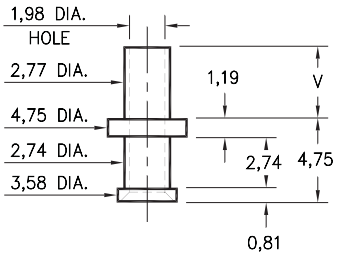

- X -	Board Thick-ness	Length V
1	0,79	1,91
2	1,57	2,67
3	2,39	3,43
4	3,18	4,19

2815-X-00-XX-00-00-07-0
Swage mount in 2,87 hole

2816

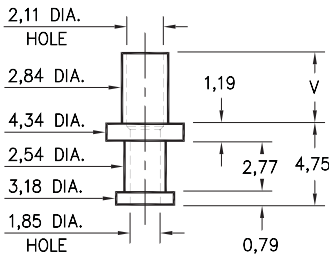

- X -	Board Thick-ness	Length V
1	0,79	1,98
2	1,57	2,77
3	2,39	3,58
4	3,18	4,37

2816-X-00-XX-00-00-07-0
Swage mount in 2,95 hole

2817

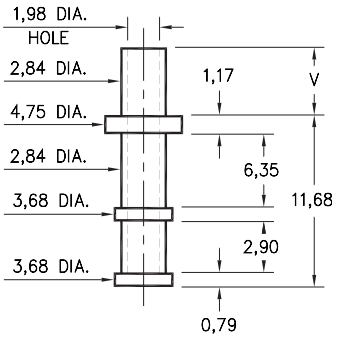

- X -	Board Thick-ness	Length V
1	0,79	1,91
2	1,57	2,67
3	2,39	3,43
4	3,18	4,19

2817-X-00-XX-00-00-07-0
Swage mount in 2,95 hole

SPECIFICATIONS

PIN MATERIAL:
Brass Alloy 360, 1/2 Hard
Swage pins are annealed

DIMENSION IN INCHES
TOLERANCES ON:
LENGTHS: ±0,13
DIAMETERS: ±0,05
ANGLES: ± 2°

ORDER CODE: 2XXX - X - 00 - XX - 00 - 00 - 07 - 0

BASIC PART #

SPECIFY PIN FINISH:
01 5,08µm TIN/LEAD OVER NICKEL
80 5,08µm TIN OVER NICKEL ◇
44 7,62µm SILVER OVER COPPER ◇
50 7,62µm ELECTRO-SOLDER (60/40 SnPb)

RoHS 2002/95/EC

2802/2804

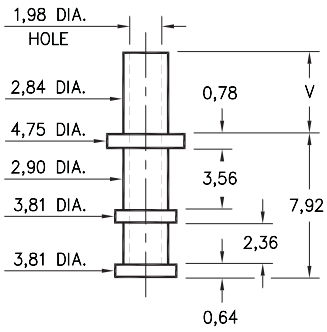

2802-X-00-XX-00-00-07-0
Swage mount in 3,0 hole

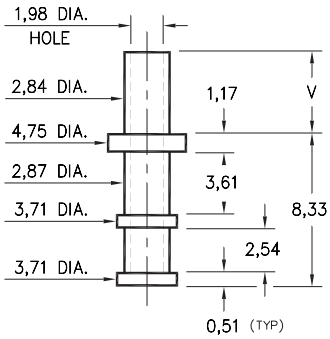

2804-X-00-XX-00-00-07-0
Swage mount in 3,0 hole

- X -	Board Thick-ness	Length V
1	0,79	1,98
2	1,57	2,77
3	2,39	3,56
4	3,18	4,34

2805

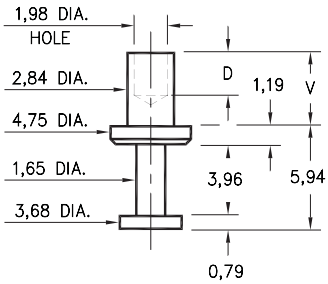

2805-X-00-XX-00-00-07-0
Swage mount in 2,95 hole

- X -	Board Thick-ness	Length V	Depth D
1	0,79	1,88	1,73
2	1,57	2,67	
3	2,39	3,43	2,49
4	3,18	4,19	

2801

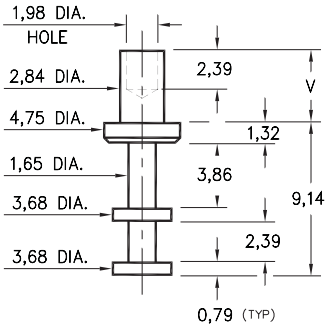

2801-X-00-XX-00-00-07-0
Swage mount in 2,95 hole

- X -	Board Thick-ness	Length V
1	0,79	1,98
2	1,57	2,77
3	2,39	3,58
4	3,18	4,37
5	4,76	5,94

2806

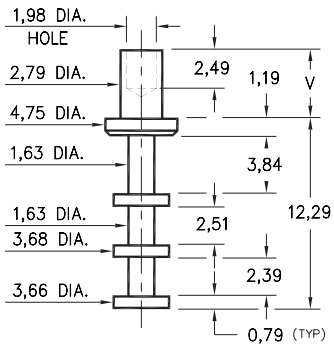

2806-X-00-XX-00-00-07-0
Swage mount in 2,95 hole

- X -	Board Thick-ness	Length V
1	0,79	1,98
2	1,57	2,77
3	2,39	3,58
4	3,18	4,37

2811

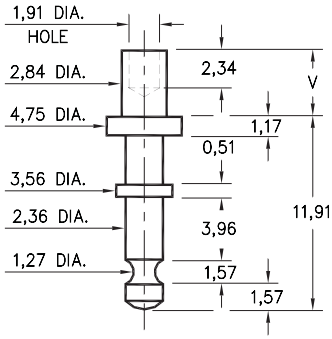

2811-X-00-XX-00-00-07-0
Swage mount in 2,95 hole

- X -	Board Thick-ness	Length V
1	0,79	1,91
2	1,57	2,67
3	2,39	3,43
4	3,18	4,19

SPECIFICATIONS

PIN MATERIAL:
Brass Alloy 360, 1/2 Hard
Swage pins are annealed

DIMENSION IN INCHES
TOLERANCES ON:
LENGTHS: ±0,13
DIAMETERS: ±0,05
ANGLES: ± 2°

ORDER CODE: 28XX - X - 00 - XX - 00 - 00 - 07 - 0

BASIC PART #

SPECIFY PIN FINISH:
01 5,08µm TIN/LEAD OVER NICKEL
80 5,08µm TIN OVER NICKEL ◇
44 7,62µm SILVER OVER COPPER ◇
50 7,62µm ELECTRO-SOLDER (60/40 SnPb)

RoHS 2002/95/EC

2104

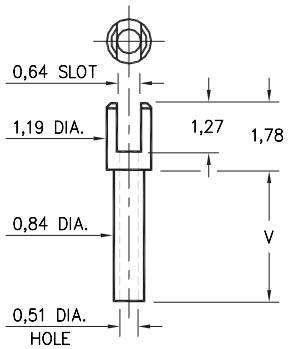

- X -	Board Thick-ness	Length V
1	0,79	1,40
2	1,57	2,18
3	2,39	2,97
4	3,18	3,76

2104-X-01-XX-00-00-07-0
Swage mount in 0,91 hole

2112

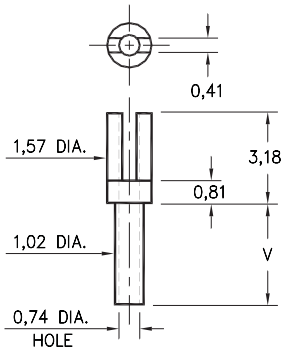

- X -	Board Thick-ness	Length V
5	0,41	0,94
1	0,79	1,35
2	1,57	2,13
3	2,39	2,92
4	3,18	3,73

2112-X-01-XX-00-00-07-0
Swage mount in 1,09 hole

2105

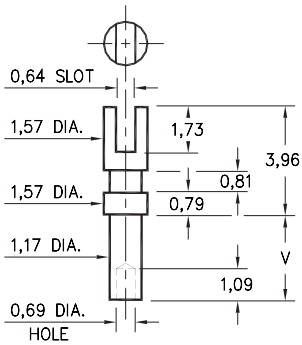

- X -	Board Thick-ness	Length V
1	0,79	1,40
2	1,57	2,18
3	2,39	2,97
4	3,18	3,78

2105-X-01-XX-00-00-07-0
Swage mount in 1,32 hole

2103

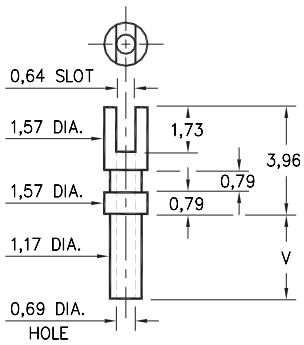

- X -	Board Thick-ness	Length V
1	0,79	1,47
2	1,57	2,26
3	2,39	3,05
4	3,18	3,81

2103-X-01-XX-00-00-07-0
Swage mount in 1,32 hole

2106/2107

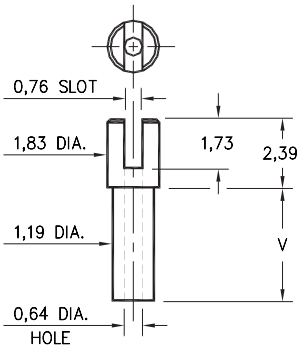

2106-X-01-XX-00-00-07-0
Swage mount in 1,32 hole

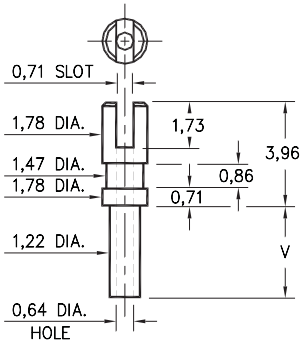

2107-X-01-XX-00-00-07-0
Swage mount in 1,32 hole

- X -	Board Thick-ness	Length V
1	0,79	1,30
2	1,57	2,08
3	2,39	2,87
4	3,18	3,68

SPECIFICATIONS

PIN MATERIAL:
Brass Alloy 360, 1/2 Hard
Swage pins are annealed

DIMENSION IN INCHES
TOLERANCES ON:
LENGTHS: ±0,13
DIAMETERS: ±0,05
ANGLES: ± 2°

ORDER CODE: 21XX - X - 01 - XX - 00 - 00 - 07 - 0

BASIC PART #

SPECIFY PIN FINISH:
01 5,08µm TIN/LEAD OVER NICKEL
80 5,08µm TIN OVER NICKEL ◇
44 7,62µm SILVER OVER COPPER ◇
50 7,62µm ELECTRO-SOLDER (60/40 SnPb)

RoHS 2002/95/EC

2303/2323/2322

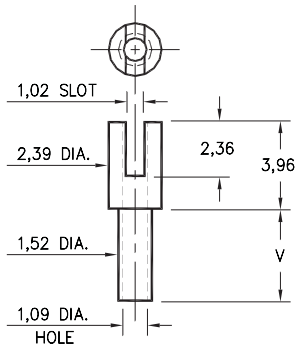

2303-X-01-XX-00-00-07-0
Swage mount in 1,63 hole

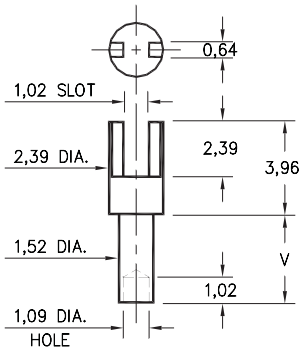

2323-X-01-XX-00-00-07-0
Swage mount in 1,63 hole

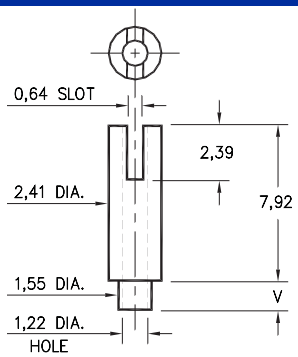

2322-X-01-XX-00-00-07-0
Swage mount in 1,63 hole

- X -	Board Thick-ness	Length V
1	0,79	1,35
2	1,57	2,13
3	2,39	2,92
4	3,18	3,73

2320

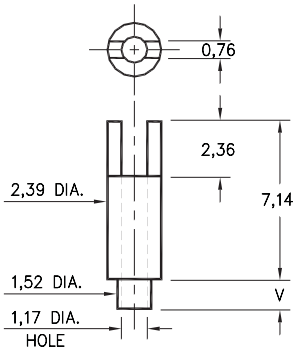

2320-X-01-XX-00-00-07-0
Swage mount in 1,63 hole

- X -	Board Thick-ness	Length V
1	0,79	1,35
2	1,57	2,13
3	2,39	2,92

2328

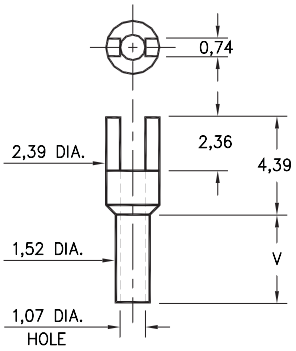

2328-X-01-XX-00-00-07-0
Swage mount in 1,63 hole

- X -	Board Thick-ness	Length V
1	0,79	1,57
2	1,57	2,39
3	2,39	3,18
4	3,18	3,96

2520/2517

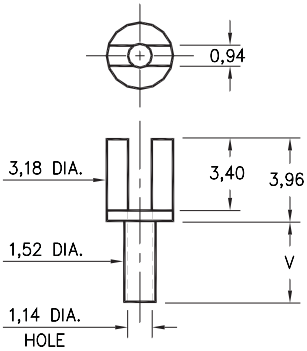

2520-X-01-XX-00-00-07-0
Swage mount in 1,63 hole

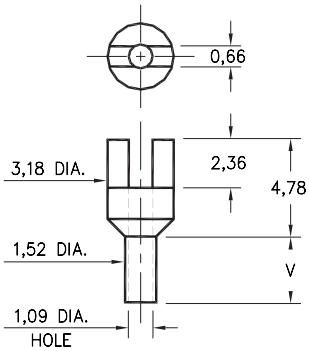

2517-X-01-XX-00-00-07-0
Swage mount in 1,63 hole

- X -	Board Thick-ness	Length V
1	0,79	1,57
2	1,57	2,39
3	2,39	3,18
4	3,18	3,96

SPECIFICATIONS

PIN MATERIAL:
Brass Alloy 360, 1/2 Hard
Swage pins are annealed

DIMENSION IN INCHES
TOLERANCES ON:
LENGTHS: ±0,13
DIAMETERS: ±0,05
ANGLES: ± 2°

ORDER CODE: 2XXX - X - 01 - XX - 00 - 00 - 07 - 0

BASIC PART #

SPECIFY PIN FINISH:
01 5,08µm TIN/LEAD OVER NICKEL
80 5,08µm TIN OVER NICKEL ◇
44 7,62µm SILVER OVER COPPER ◇
50 7,62µm ELECTRO-SOLDER (60/40 SnPb)

RoHS 2002/95/EC

2315

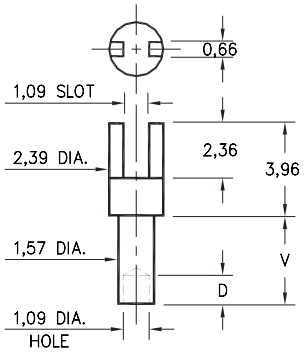

- X -	Board Thick-ness	Length V	Depth D
1	0,79	1,14	1,02
2	1,57	2,39	
3	2,39	3,18	1,57
4	3,18	3,96	

2315-X-01-XX-00-00-07-0
Swage mount in 1,70 hole

2302

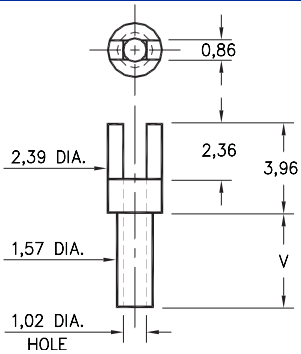

- X -	Board Thick-ness	Length V
1	0,79	1,35
2	1,57	2,13
3	2,39	2,92
4	3,18	3,73

2302-X-01-XX-00-00-07-0
Swage mount in 1,70 hole

2352

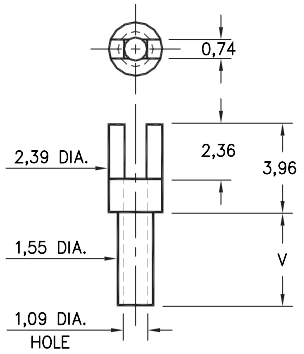

- X -	Board Thick-ness	Length V
1	0,79	1,14
2	1,57	2,39
3	2,39	3,18
4	3,18	3,96

2352-X-01-XX-00-00-07-0
Swage mount in 1,70 hole

2362

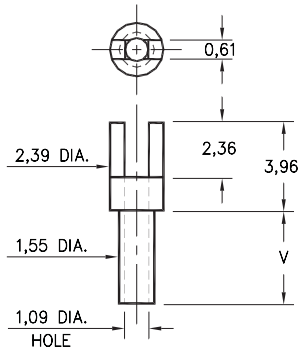

- X -	Board Thick-ness	Length V
5	0,41	0,94
1	0,79	1,35
2	1,57	2,13
3	2,39	2,92
4	3,18	3,73

2362-X-01-XX-00-00-07-0
Swage mount in 1,70 hole

2507/2526

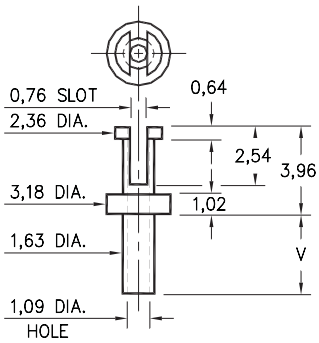

2507-X-01-XX-00-00-07-0
Swage mount in 1,70 hole

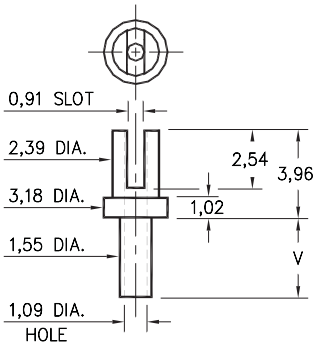

2526-X-01-XX-00-00-07-0
Swage mount in 1,63 hole

- X -	Board Thick-ness	Length V
1	0,79	1,35
2	1,57	2,13
3	2,39	2,92
4	3,18	3,73

SPECIFICATIONS

PIN MATERIAL:
Brass Alloy 360, 1/2 Hard
Swage pins are annealed

DIMENSION IN INCHES
TOLERANCES ON:
LENGTHS: ±0,13
DIAMETERS: ±0,05
ANGLES: ± 2°

ORDER CODE: 2XXX - X - 01 - XX - 00 - 00 - 07 - 0

BASIC PART #

SPECIFY PIN FINISH:
01 5,08µm TIN/LEAD OVER NICKEL
80 5,08µm TIN OVER NICKEL ◇
44 7,62µm SILVER OVER COPPER ◇
50 7,62µm ELECTRO-SOLDER (60/40 SnPb)

RoHS 2002/95/EC

2314

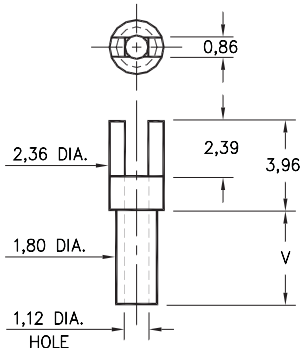

- X -	Board Thick-ness	Length V
1	0,79	1,14
2	1,57	2,39
3	2,39	3,18
4	3,18	3,96

2314-X-01-XX-00-00-07-0
Swage mount in 1,93 hole

2511

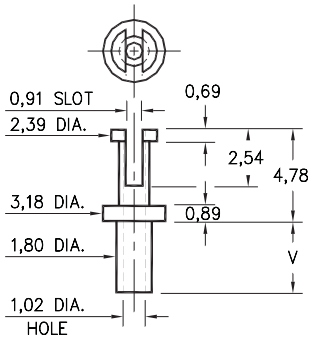

- X -	Board Thick-ness	Length V
1	0,79	1,60
2	1,57	2,39
3	2,39	3,18
4	3,18	3,96

2511-X-01-XX-00-00-07-0
Swage mount in 1,93 hole

2515/2516

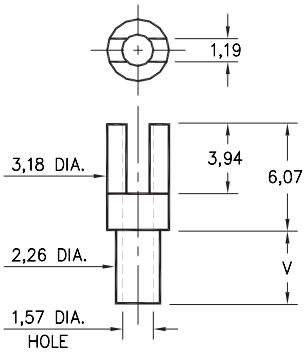

2515-X-01-XX-00-00-07-0
Swage mount in 2,39 hole

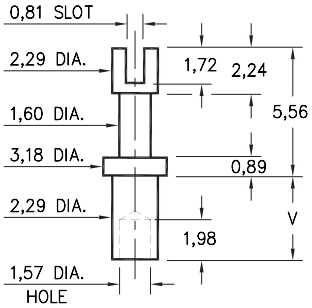

2516-X-01-XX-00-00-07-0
Swage mount in 2,39 hole

- X -	Board Thick-ness	Length V
1	0,79	1,91
2	1,57	2,67
3	2,39	3,43
4	3,18	3,73

2502

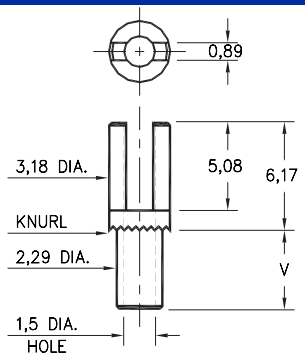

2502-X-01-XX-00-00-07-0
Swage mount in 2,39 hole

- X -	Board Thick-ness	Length V
1	0,79	2,03
2	1,57	2,82
3	2,39	3,63
4	3,18	4,42

SPECIFICATIONS

PIN MATERIAL:
Brass Alloy 360, 1/2 Hard
Swage pins are annealed

DIMENSION IN INCHES
TOLERANCES ON:
LENGTHS: ±0,13
DIAMETERS: ±0,05
ANGLES: ± 2°

ORDER CODE: 2XXX - X - 01 - XX - 00 - 00 - 07 - 0

BASIC PART #

SPECIFY PIN FINISH:
01 5,08µm TIN/LEAD OVER NICKEL
80 5,08µm TIN OVER NICKEL ◇
44 7,62µm SILVER OVER COPPER ◇
50 7,62µm ELECTRO-SOLDER (60/40 SnPb)

RoHS 2002/95/EC

2715

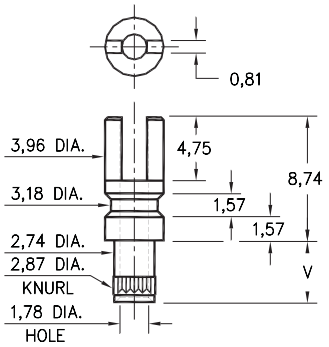

- X -	Board Thick-ness	Length V
2	1,57	2,77
3	2,39	3,58
4	3,18	4,37

2715-X-01-XX-00-00-07-0
Swage mount in 2,95 hole

2809

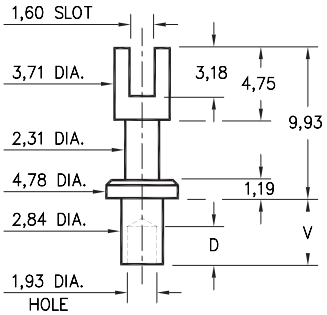

- X -	Board Thick-ness	Length V	Depth D
1	0,79	1,98	1,73
2	1,57	2,76	
3	2,39	3,58	2,49
4	3,18	4,36	

2809-X-01-XX-00-00-07-0
Swage mount in 2,95 hole

2701/2808

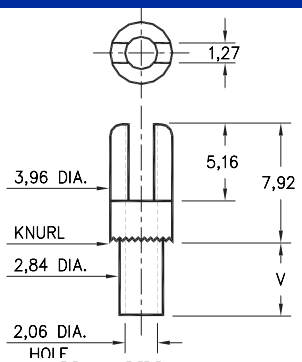

2701-X-01-XX-00-00-07-0
Swage mount in 2,95 hole

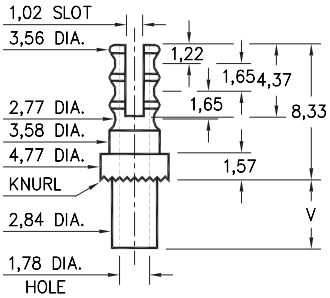

- X -	Board Thick-ness	Length V
1	0,79	1,91
2	1,57	2,67
3	2,39	3,43
4	3,18	4,19

2808-X-01-XX-00-00-07-0
Swage mount in 2,95 hole

2762

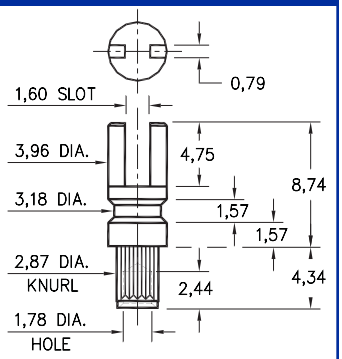

2762-4-01-XX-00-00-07-0
Swage mount in 2,95 hole
For 3,18 thick board

2807

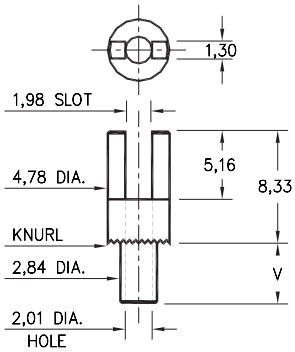

- X -	Board Thick-ness	Length V
1	0,79	1,98
2	1,57	2,77
3	2,39	3,56
4	3,18	4,34

2807-X-01-XX-00-00-07-0
Swage mount in 2,95 hole

SPECIFICATIONS

PIN MATERIAL:
Brass Alloy 360, 1/2 Hard
Swage pins are annealed

DIMENSION IN INCHES
TOLERANCES ON:
LENGTHS: ±0,13
DIAMETERS: ±0,05
ANGLES: ± 2°

ORDER CODE: 2XXX - X - 01 - XX - 00 - 00 - 07 - 0

BASIC PART #

SPECIFY PIN FINISH:
01 5,08µm TIN/LEAD OVER NICKEL
80 5,08µm TIN OVER NICKEL ◇
44 7,62µm SILVER OVER COPPER ◇
50 7,62µm ELECTRO-SOLDER (60/40 SnPb)

RoHS 2002/95/EC

2709

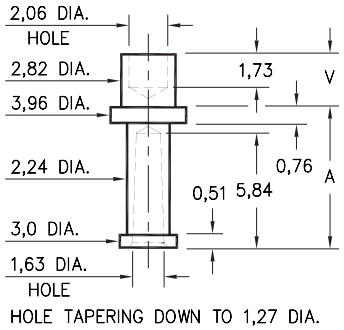

- X -	Board Thick-ness	Length V	Length A
2	1,57	2,77	7,14
3	2,39	3,58	6,35

2709-X-07-XX-00-00-07-0
Swage mount in 2,95 hole

8602

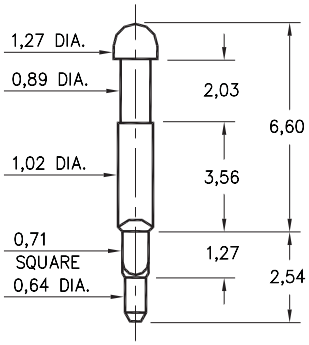

8602-1-00-XX-00-00-07-0
Square press-fit in 0,81
plated thru hole

2115

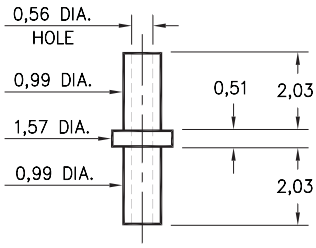

2115-2-00-XX-00-00-07-0
Swage mount in 1,09 hole
For 1,57 thick board

2326

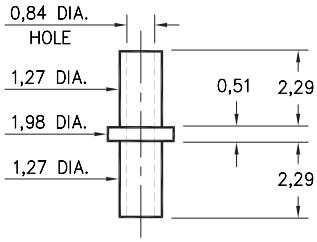

2326-2-00-XX-00-00-07-0
Swage mount in 1,40 hole
for 1,57 thick board

8831

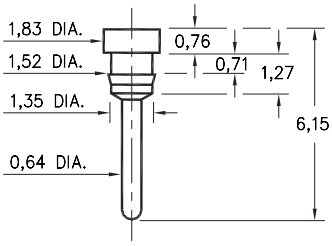

8831-0-00-XX-00-00-03-0
Press-fit in 1,45 mounting hole

8835

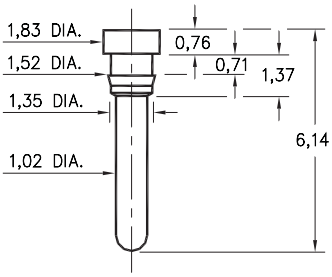

8835-0-00-XX-00-00-03-0
Press-fit in 1,45 mounting hole

8836

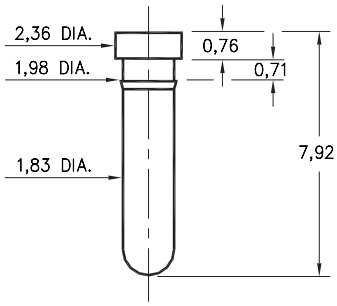

8836-0-00-XX-00-00-03-0
Press-fit in 1,91 mounting hole

SPECIFICATIONS

PIN MATERIAL:
Brass Alloy 360, 1/2 Hard
Swage pins are annealed

DIMENSION IN INCHES
TOLERANCES ON:
LENGTHS: ±0,13
DIAMETERS: ±0,05
ANGLES: ± 2°

ORDER CODE: XXXX - X - 0X - XX - 00 - 00 - 0X - 0

BASIC PART #

SPECIFY PIN FINISH:
01 5,08µm TIN/LEAD OVER NICKEL
80 5,08µm TIN OVER NICKEL ◇
44 7,62µm SILVER OVER COPPER ◇
50 7,62µm ELECTRO-SOLDER (60/40 SnPb)

RoHS 2002/95/EC

2318

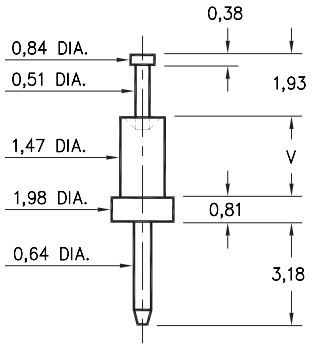

- X -	Board Thick-ness	Length V
1	0,79	1,30
2	1,57	2,08
3	2,39	2,87

2318-X-00-XX-00-00-07-0
Swage mount in 1,57 hole

2309

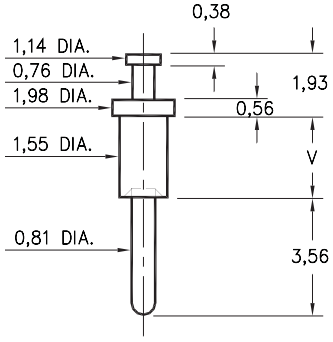

- X -	Board Thick-ness	Length V
1	0,79	13,7
2	1,57	2,13
3	2,39	2,92
4	3,18	3,73

2309-X-00-XX-00-00-07-0
Swage mount in 1,63 hole

2514

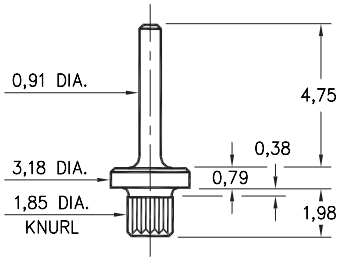

2514-2-00-XX-00-00-07-0
Press-fit in 1,78 mounting hole

SPECIFICATIONS

PIN MATERIAL:
Brass Alloy 360, 1/2 Hard
Swage pins are annealed

DIMENSION IN INCHES
TOLERANCES ON:
LENGTHS: ±0,13
DIAMETERS: ±0,05
ANGLES: ± 2°

ORDER CODE: XXXX - X - 00 - XX - 00 - 00 - 07 - 0

BASIC PART #

SPECIFY PIN FINISH:
01 5,08µm TIN/LEAD OVER NICKEL
80 5,08µm TIN OVER NICKEL ◇
44 7,62µm SILVER OVER COPPER ◇
50 7,62µm ELECTRO-SOLDER (60/40 SnPb)

RoHS 2002/95/EC

2319

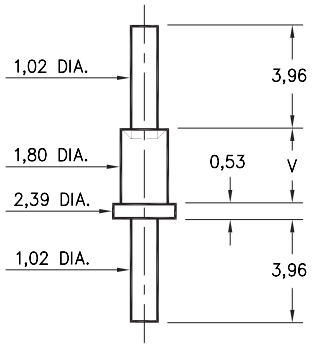

- X -	Board Thick-ness	Length V
1	0,79	1,30
2	1,57	2,08
3	2,39	2,87

2319-X-00-XX-00-00-07-0
Swage mount in 1,93 hole

2313

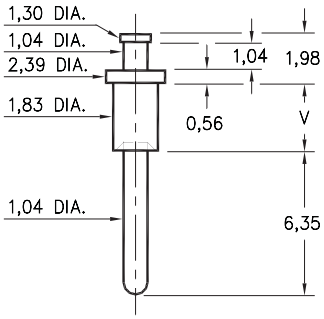

- X -	Board Thick-ness	Length V
1	0,79	1,30
2	1,57	2,13
3	2,39	2,87
4	3,18	3,68

2313-X-00-XX-00-00-07-0
Swage mount in 1,93 hole

2321

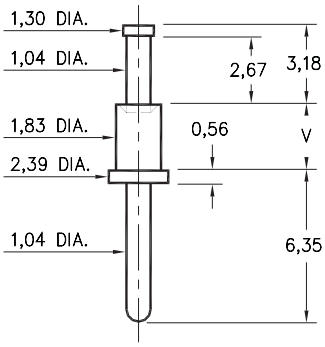

- X -	Board Thick-ness	Length V
1	0,79	1,30
2	1,57	2,08
3	2,39	2,87
4	3,18	3,68

2321-X-00-XX-00-00-07-0
Swage mount in 1,93 hole

2706

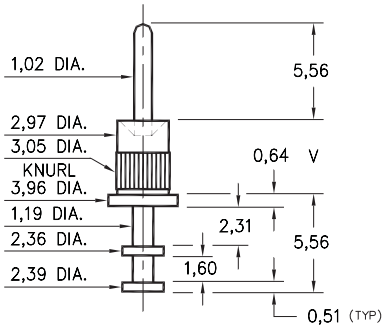

- X -	Board Thick-ness	Length V
1	0,79	1,60
2	1,57	2,36
3	2,39	3,18
4	3,18	3,96

2706-X-00-XX-00-00-07-0
Swage mount in 3,05 hole

2530

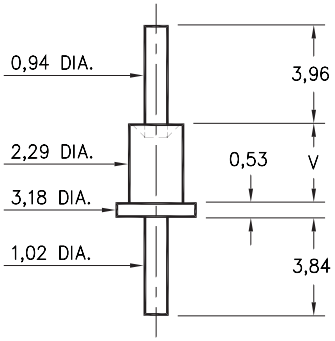

- X -	Board Thick-ness	Length V
2	1,57	2,39
3	2,39	3,18
4	3,18	3,96

2530-X-00-XX-00-00-07-0
Swage mount in 2,39 hole

3156

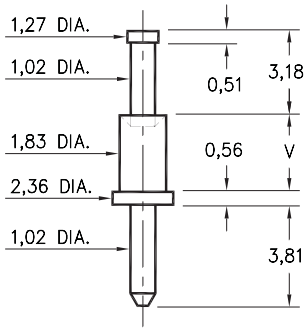

- X -	Board Thick-ness	Length V
1	0,79	1,30
2	1,57	2,08
3	2,39	2,87
4	3,18	3,68

3156-X-00-XX-00-00-08-0
Swage mount in 1,93 hole

SPECIFICATIONS

PIN MATERIAL:
Brass Alloy 360, 1/2 Hard
Swage pins are annealed

DIMENSION IN INCHES
TOLERANCES ON:
LENGTHS: ±0,13
DIAMETERS: ±0,05
ANGLES: ± 2°

ORDER CODE: 2XXX - X - 00 - XX - 00 - 00 - 07 - 0

BASIC PART #

SPECIFY PIN FINISH:
01 5,08µm TIN/LEAD OVER NICKEL
80 5,08µm TIN OVER NICKEL ◇
44 7,62µm SILVER OVER COPPER ◇
50 7,62µm ELECTRO-SOLDER (60/40 SnPb)

RoHS 2002/95/EC

CUSTOM PIN/RECEPTACLE WORKSHEET

PHOTOCOPY THIS PAGE AND FAX, SCAN OR E-MAIL TO MILL-MAX FOR A PROMPT QUOTATION

Mill-Max Mfg. Corp., P.O. Box 300, 190 Pine Hollow Road, Oyster Bay, NY 11771-0300. Fax: 516-922-9253

NAME _____ TITLE: _____

COMPANY _____ DATE: _____

ADDRESS _____ PHONE: _____

_____ FAX: _____

QUANTITIES TO QUOTE _____

SPECIFICATIONS OF MACHINED PINS, TERMINALS, RECEPTACLE SHELLS, etc.

SIMILAR MILL-MAX PART #:_____

MATERIAL:
- ☐ BRASS
- ☐ PHOSPHOR BRONZE
- ☐ TELLURIUM COPPER

(check available stock sizes on page 227)

FINISH:
- ☐ TIN over NICKEL
- ☐ TIN/LEAD over COPPER
- ☐ _____µm GOLD over NICKEL
- ☐ SILVER over COPPER
- ☐ OTHER:_____

STANDARD MACHINING TOLERANCES ARE ± 0,51 FOR DIAMETERS, ±0,13 FOR LENGTHS. IF TIGHTER TOLERANCES ARE REQUIRED, PLEASE SPECIFY CRITICAL DIMENSIONS ON SKETCH BELOW.

ADDITIONAL SPECIFICATIONS FOR RECEPTACLE ONLY

SIZE OF MATING PIN OR COMPONENT LEAD:_____
(round/square/rectangular)

LENGTH OF MATING PIN/LEAD:_____

USE MILL-MAX CONTACT TYPE #:_____
(see page 214 for selector chart)

REQUIRED INSERTION/ EXTRACTION FORCES: ☐ LOW ☐ MEDIUM ☐ HIGH

CONTACT FINISH:
- ☐ TIN over NICKEL
- ☐ _____µm GOLD over NICKEL
- ☐ OTHER:_____

ARE THERE ANY UNUSUAL REQUIREMENTS SUCH AS HIGH OPERATING TEMPERATURE OR CURRENT RATING?

_____

_____

IF YOU NEED ASSISTANCE, PLEASE CALL MILL-MAX AND ASK FOR AN APPLICATIONS ENGINEER

THE "MULTI-FINGER" CONTACT

Mill-Max makes pin receptacles by press-fitting a "multi-finger" spring contact into a machined shell. A selection of 34 contact types are pre-tooled for those who wish to design custom receptacles. This extensive family of contacts will accept round pins ranging from 0,20 to 2,59 diameter, as well as rectangular component leads and square wraposts, where the effective diameter is taken as the diagonal dimension of the lead.

Many contacts are interchangeable within a given shell, and so the contact selector chart has been organized by alternate contact groupings. Standard receptacles found in this catalog can be easily assembled with alternate contacts to suit special applications, for example: low insertion force or high operating temperature.

Contact Groups	Contact Type	Accepts Minimum Pin Diameter	Accepts Maximum Pin Diameter	Contact Compliancy	Contact Length	Number of Fingers	Contact Material	Current Rating (For 10°C DT)
	#04	0,20	0,33	0,76	1,35	3	BeCu	2A
	#10	0,30	0,43		1,52	6		
A	#09	0,38	0,46	0,51	1,3	3		3A
	#11		0,51	0,76	1,91			
	#21		0,56	0,10				
	#05							
B	#12			0,76	1,57	4		
	#22			0,13		6		
C	#30		0,64		2,11	4		
	#38			0,10			BeNi	
	#32		0,66	0,23		6	BeCu	
	#35			0,20				
	#43							
	#15	0,56	0,81	0,10				4.5A
D	#06			0,18	2,87	4		
	#26			0,13			BeNi	
	#16		0,86	0,15	2,11	6	BeCu	
	#47	0,64	0,94	0,28				
	#18	0,94	1,09	0,10	1,57			8A
E	#36	0,56	1,07	0,56	3,05	4		
	#49	0,81	1,17	0,15	3,18			
	#34			0,25	3,05			
	#24			0,23			BeNi	
F	#02	1,02	1,27	0,15	2,13	6	BeCu	
	#28	1,07	1,32	0,13				
J	#42	1,35	1,6	0,10	3,81	4		20A
	#03	1,02	1,52	0,25				11.2A
G	#23	1,14	1,65	0,20	2,54	6		
	#13	1,22	1,63	0,25	3,23	4		
	#33			0,20			BeNi	
H	#07	1,65	2,08	0,33	3,81		BeCu	15A
	#27			0,30			BeNi	
	#14		2,16	0,36			BeCu	
	#08	2,13	2,59	0,28	3,1	6		18A

CONTACT SPECIFICATIONS

COMPLIANCY (δ)

The Mill-Max "multi-finger" contact exhibits wide compliance, eg. the ability of any single contact to accept a broad range of round pins as well as rectangular or square component leads. This ability is referred to as the contact's "compliancy". The compliancy factor (δ) specifies the re-configured operating range after the initial insertion of the largest permissible mating pin. For example: the # 34 contact has an initial operating range from 0,81 to 1,19 diameter pins, and a compliancy of 0,25; but after insertion of a 1,19 pin, the contact is sized, and the minimum pin acceptance becomes 1,19 - 0,25 = 0,94. Thus, the new operating range becomes 0,94 to 1,19.

The insertion/extraction/normal force characteristics that follow were derived using 0,76µm gold plated contact and polished steel, gauge pins having a bullet-shaped tip. The curves represent typical average values. The charts only guide you in selecting a clip that is close to your specification. Your results may vary, so for your specification, **log onto www.mill-max.com to obtain complimentary samples of a receptacle assembly for your evaluation.**

NORMAL FORCE

Normal force is the force with which each finger of the "multi-finger" contact grips the mating pin or component lead. For normal forces below 30 grams, gold on both the pin and contact is recommended. For normal forces above 100 grams, tin finish has proven to be very reliable.

CURRENT RATING

Current rating for each contact group can be found in the contact selector chart on page 214. This current rating (for a 10° C temperature rise above ambient) is conservative since it rates an individual pin/ receptacle pair in the free air. For all practical applications, the current rating will be higher because of the heat sinking ability of wires and circuit traces attached to the pin and receptacles.

CONTACT MATERIAL AND STRESS RELAXATION AT HIGH TEMPERATURE

Mill-Max contacts are made from either beryllium copper or beryllium nickel that has been heat treated to achieve ultimate spring properties. The graph illustrates how beryllium copper loses its spring properties over time at a high temperature (225°C). Thus, for burn-in applications and continuous operation above 150°C, beryllium nickel should be substituted for beryllium copper.

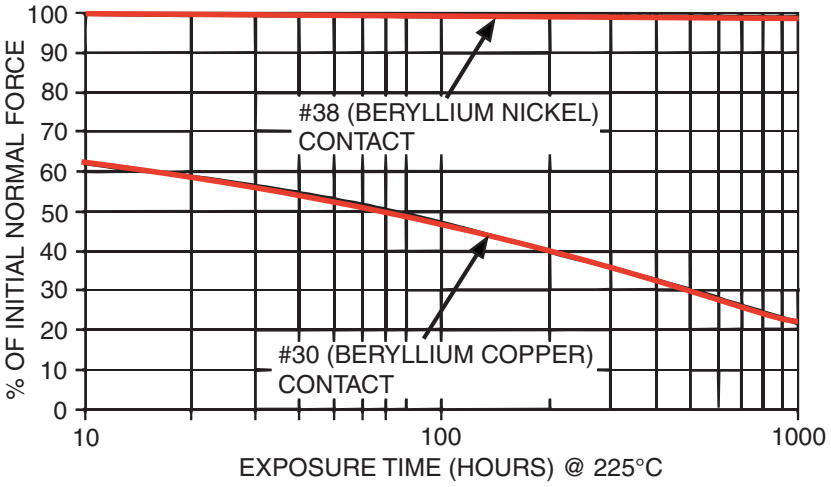

CONTACT DATA

Insertion / Extraction Force Graphs

#04 CONTACT

FOR 0,20-0,33 DIAMETER PINS (δ=0,08)
3-FINGER (see page 214)

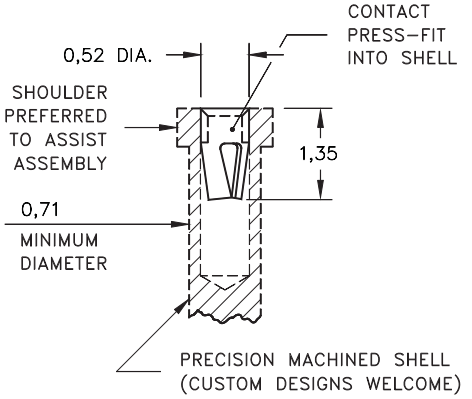

CONTACT MATERIAL:
BERYLLIUM COPPER Alloy 172, Heat Treated

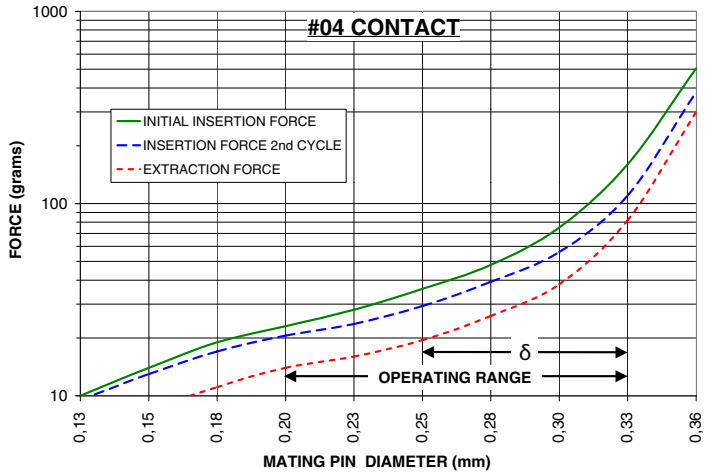

The insertion/extraction/normal force characteristics above were derived using 0,76 micrometers gold plated contact and polished steel gauge pins having a bullet-shaped tip.

The curves represent typical average values; they are best used to compare the differences between similar size contacts and to guide you in selecting one that is suitable for your application. Your results may vary, so for your specification, we encourage you to obtain complimentary samples for your evaluation.

#10 CONTACT

FOR 0,30-0,43 DIAMETER PINS (δ=0,08)
6-FINGER (see page 214)

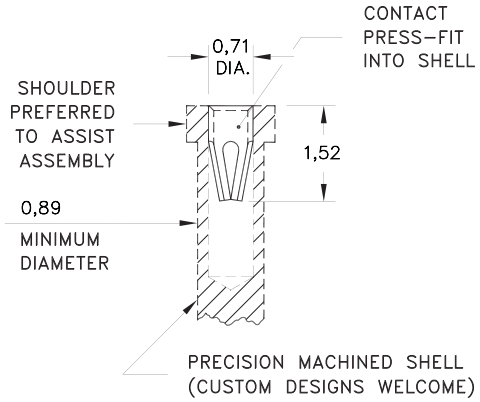

CONTACT MATERIAL:
BERYLLIUM COPPER Alloy 172, Heat Treated

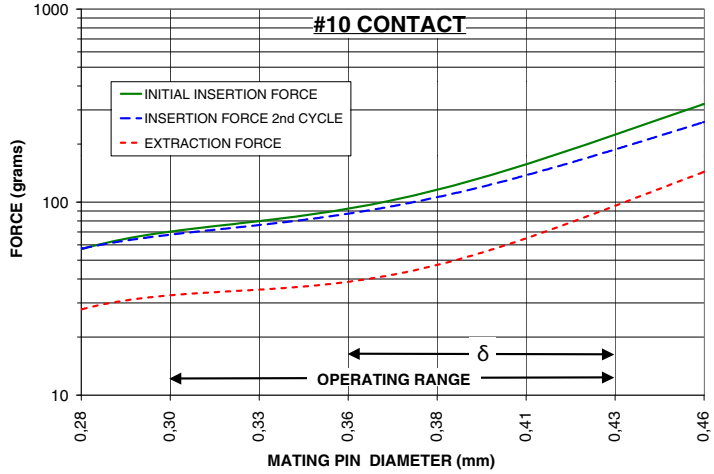

The insertion/extraction/normal force characteristics above were derived using 0,76 micrometers gold plated contact and polished steel gauge pins having a bullet-shaped tip.

The curves represent typical average values; they are best used to compare the differences between similar size contacts and to guide you in selecting one that is suitable for your application. Your results may vary, so for your specification, we encourage you to obtain complimentary samples for your evaluation.

#09 CONTACT

FOR 0,38-0,46 DIAMETER PINS (δ=0,51)
3-FINGER, GROUP A (see page 214)

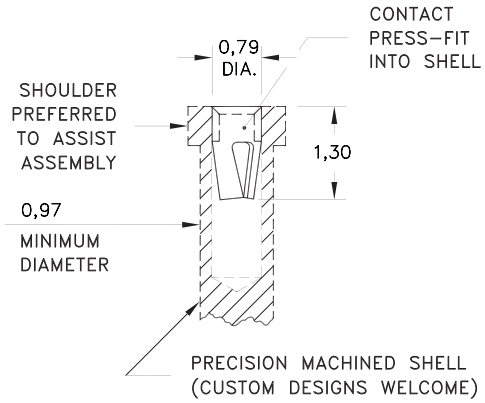

CONTACT MATERIAL:
BERYLLIUM COPPER Alloy 172, Heat Treated

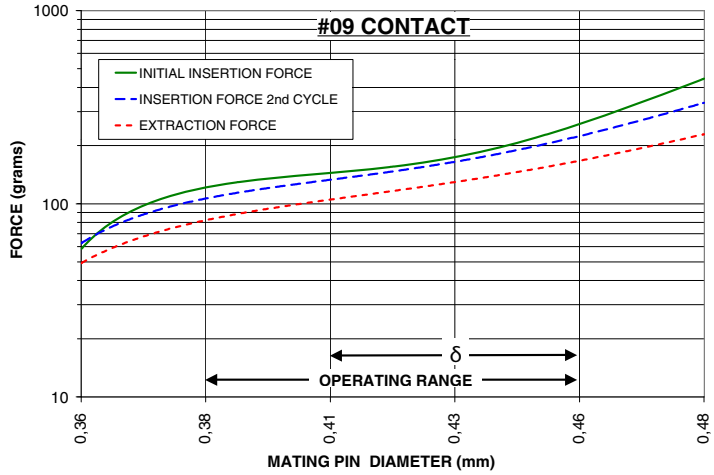

The insertion/extraction/normal force characteristics above were derived using 0,76 micrometers gold plated contact and polished steel gauge pins having a bullet-shaped tip.

The curves represent typical average values; they are best used to compare the differences between similar size contacts and to guide you in selecting one that is suitable for your application. Your results may vary, so for your specification, we encourage you to obtain complimentary samples for your evaluation.

CONTACT DATA

Insertion / Extraction Force Graphs

#11 CONTACT

FOR 0,38-0,51 DIAMETER PINS (δ=0,08)
3-FINGER, GROUP A (see page 214)

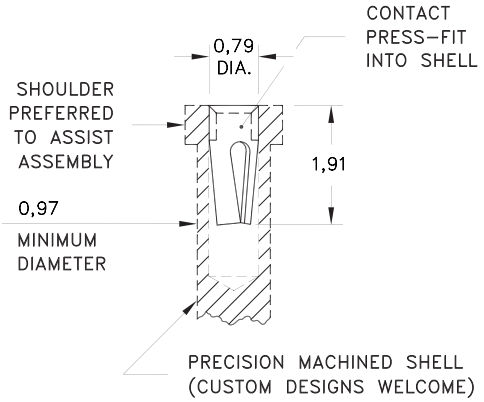

CONTACT MATERIAL:
BERYLLIUM COPPER Alloy 172, Heat Treated

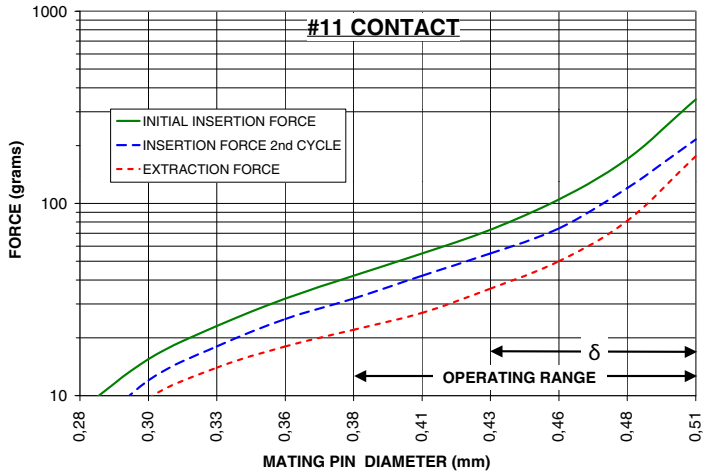

The insertion/extraction/normal force characteristics above were derived using 0,76 micrometers gold plated contact and polished steel gauge pins having a bullet-shaped tip.

The curves represent typical average values; they are best used to compare the differences between similar size contacts and to guide you in selecting one that is suitable for your application. Your results may vary, so for your specification, we encourage you to obtain complimentary samples for your evaluation.

#21 CONTACT

FOR 0,38-0,56 DIAMETER PINS (δ=0,10)
3-FINGER, GROUP A (see page 214)

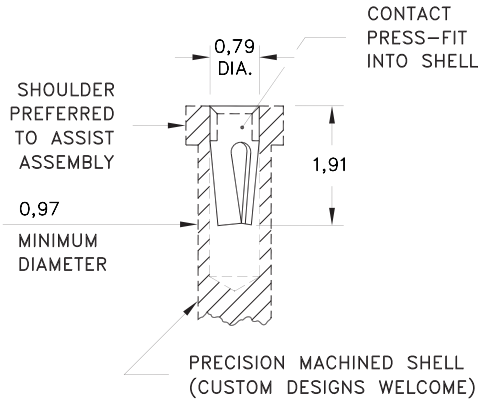

CONTACT MATERIAL:
BERYLLIUM COPPER Alloy 172, Heat Treated

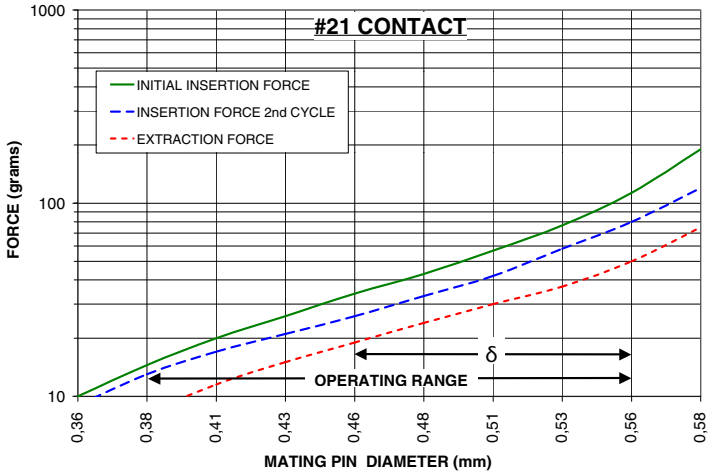

The insertion/extraction/normal force characteristics above were derived using 0,76 micrometers gold plated contact and polished steel gauge pins having a bullet-shaped tip.

The curves represent typical average values; they are best used to compare the differences between similar size contacts and to guide you in selecting one that is suitable for your application. Your results may vary, so for your specification, we encourage you to obtain complimentary samples for your evaluation.

#05 CONTACT

FOR 0,38-0,56 DIAMETER PINS (δ=0,10)
3-FINGER, GROUP A (see page 214)

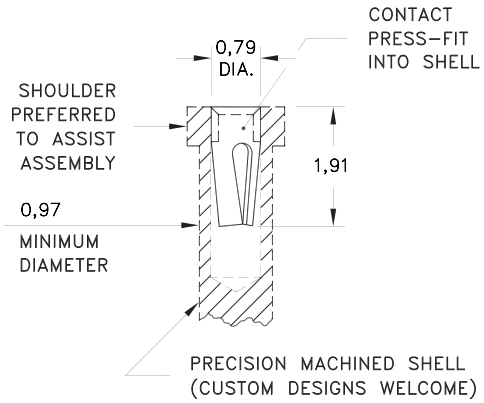

CONTACT MATERIAL:
BERYLLIUM COPPER Alloy 172, Heat Treated

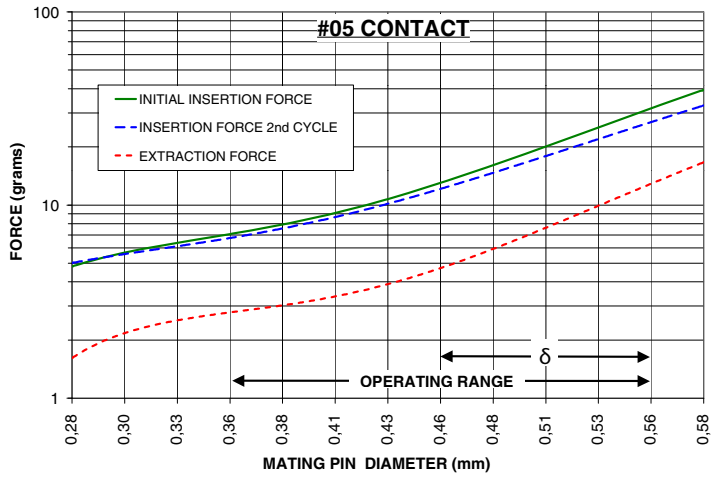

The insertion/extraction/normal force characteristics above were derived using 0,76 micrometers gold plated contact and polished steel gauge pins having a bullet-shaped tip.

The curves represent typical average values; they are best used to compare the differences between similar size contacts and to guide you in selecting one that is suitable for your application. Your results may vary, so for your specification, we encourage you to obtain complimentary samples for your evaluation.

CONTACT DATA

Insertion / Extraction Force Graphs

#12 CONTACT

FOR 0,38-0,56 DIAMETER PINS (δ=0,08)
4-FINGER, GROUP B (see page 214)

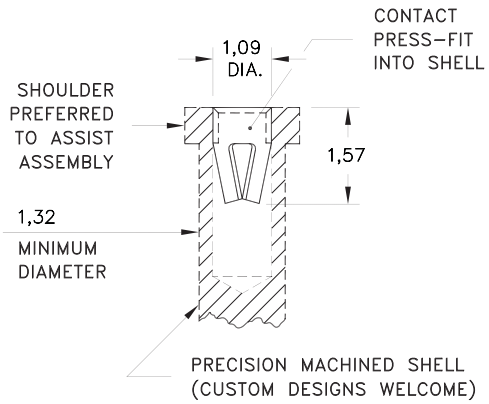

CONTACT MATERIAL:
BERYLLIUM COPPER Alloy 172, Heat Treated

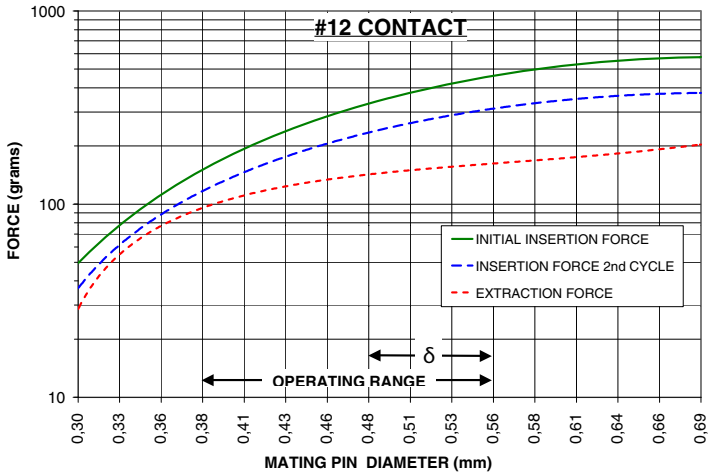

The insertion/extraction/normal force characteristics above were derived using 0,76 micrometers gold plated contact and polished steel gauge pins having a bullet-shaped tip.

The curves represent typical average values; they are best used to compare the differences between similar size contacts and to guide you in selecting one that is suitable for your application. Your results may vary, so for your specification, we encourage you to obtain complimentary samples for your evaluation.

#22 CONTACT

FOR 0,38-0,56 DIAMETER PINS (δ=0,13)
6-FINGER, GROUP B (see page 214)

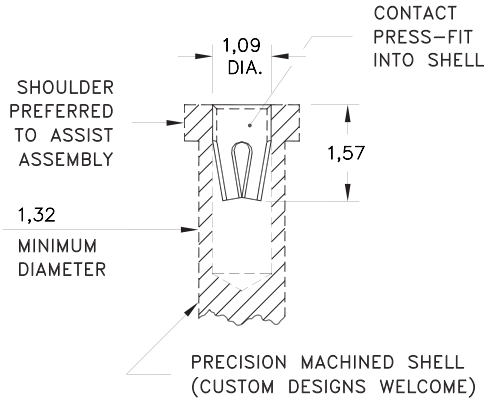

CONTACT MATERIAL:
BERYLLIUM COPPER Alloy 172, Heat Treated

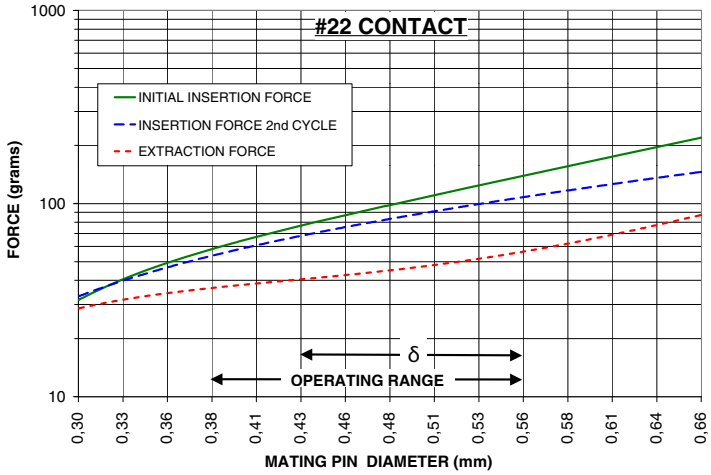

The insertion/extraction/normal force characteristics above were derived using 0,76 micrometers gold plated contact and polished steel gauge pins having a bullet-shaped tip.

The curves represent typical average values; they are best used to compare the differences between similar size contacts and to guide you in selecting one that is suitable for your application. Your results may vary, so for your specification, we encourage you to obtain complimentary samples for your evaluation.

#30 CONTACT

FOR 0,38-0,64 DIAMETER PINS (δ=0,13)
4-FINGER, GROUP C (see page 214)

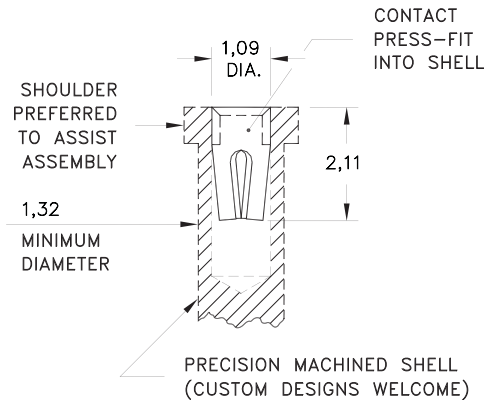

CONTACT MATERIAL:
BERYLLIUM COPPER Alloy 172, Heat Treated

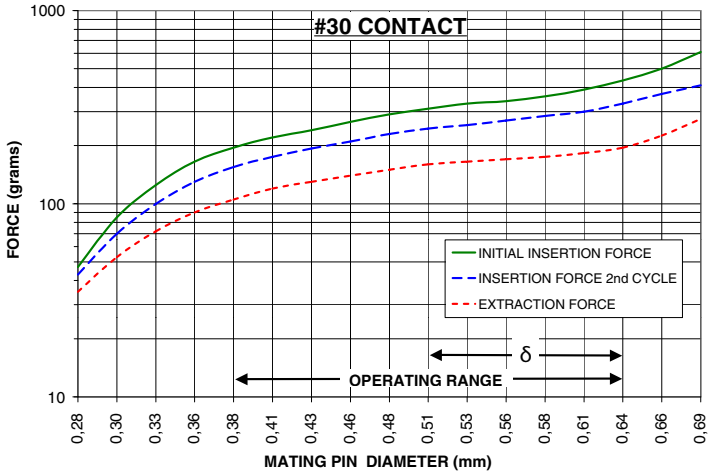

The insertion/extraction/normal force characteristics above were derived using 0,76 micrometers gold plated contact and polished steel gauge pins having a bullet-shaped tip.

The curves represent typical average values; they are best used to compare the differences between similar size contacts and to guide you in selecting one that is suitable for your application. Your results may vary, so for your specification, we encourage you to obtain complimentary samples for your evaluation.

CONTACT DATA

Insertion / Extraction Force Graphs

#38 CONTACT

FOR 0,38-0,64 DIAMETER PINS (δ=0,10)
4-FINGER, GROUP C (see page 214)

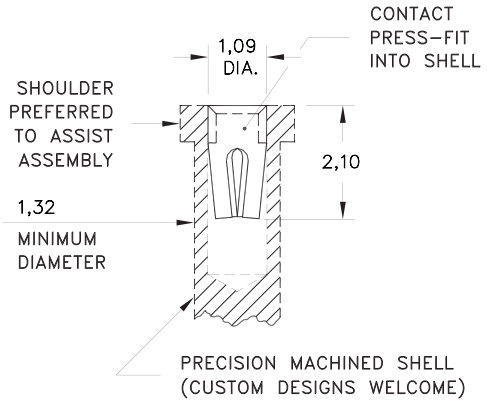

CONTACT MATERIAL:
BERYLLIUM NICKEL Alloy 360, Heat Treated

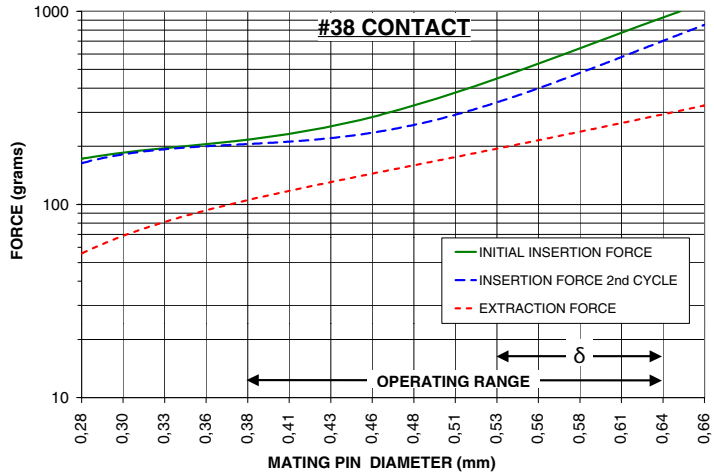

The insertion/extraction/normal force characteristics above were derived using 0,76 micrometers gold plated contact and polished steel gauge pins having a bullet-shaped tip.

The curves represent typical average values; they are best used to compare the differences between similar size contacts and to guide you in selecting one that is suitable for your application. Your results may vary, so for your specification, we encourage you to obtain complimentary samples for your evaluation.

#32 CONTACT

FOR 0,38-0,66 DIAMETER PINS (δ=0,23)
6-FINGER, GROUP C (see page 214)

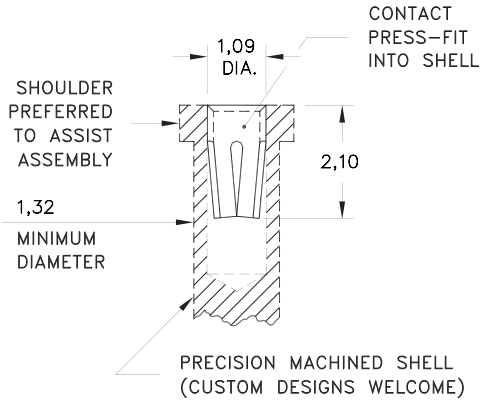

CONTACT MATERIAL:
BERYLLIUM COPPER Alloy 172, Heat Treated

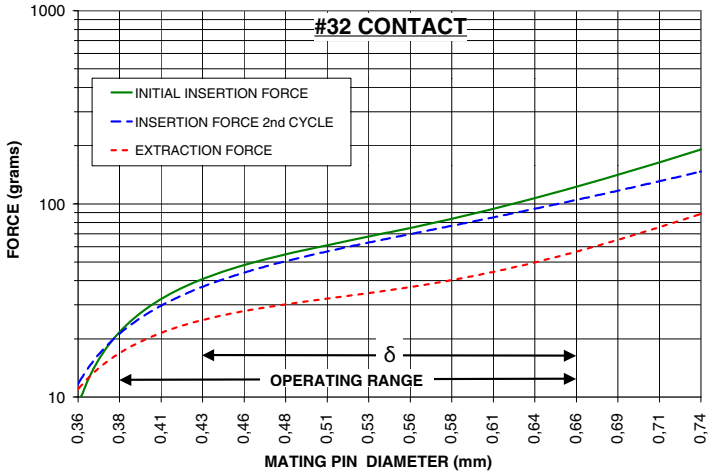

The insertion/extraction/normal force characteristics above were derived using 0,76 micrometers gold plated contact and polished steel gauge pins having a bullet-shaped tip.

The curves represent typical average values; they are best used to compare the differences between similar size contacts and to guide you in selecting one that is suitable for your application. Your results may vary, so for your specification, we encourage you to obtain complimentary samples for your evaluation.

#35 CONTACT

FOR 0,38-0,66 DIAMETER PINS (δ=0,20)
6-FINGER, GROUP C (see page 214)

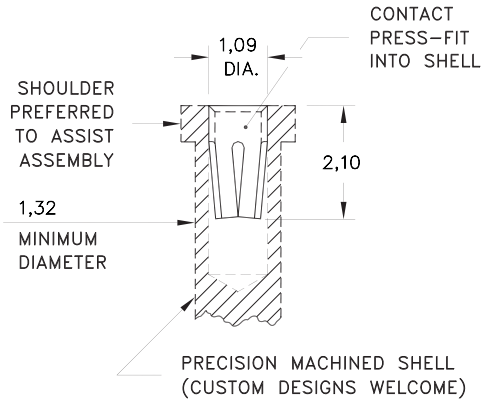

CONTACT MATERIAL:
BERYLLIUM COPPER Alloy 172, Heat Treated

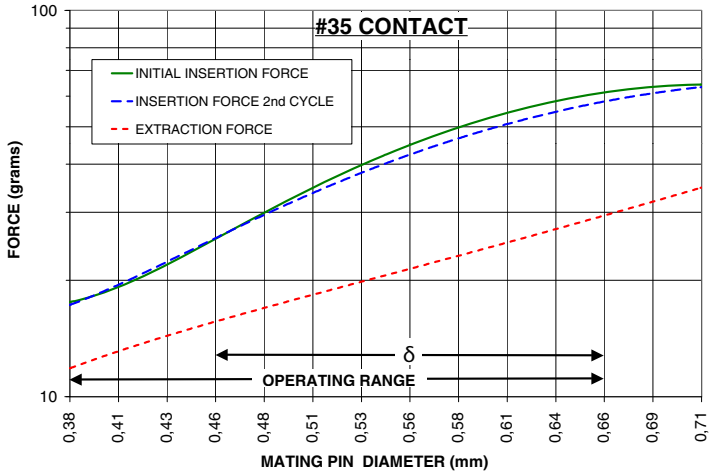

The insertion/extraction/normal force characteristics above were derived using 0,76 micrometers gold plated contact and polished steel gauge pins having a bullet-shaped tip.

The curves represent typical average values; they are best used to compare the differences between similar size contacts and to guide you in selecting one that is suitable for your application. Your results may vary, so for your specification, we encourage you to obtain complimentary samples for your evaluation.

CONTACT DATA

Insertion / Extraction Force Graphs

#43 CONTACT

FOR 0,38-0,66 DIAMETER PINS (δ=0,20)
6-FINGER, GROUP C (see page 214)

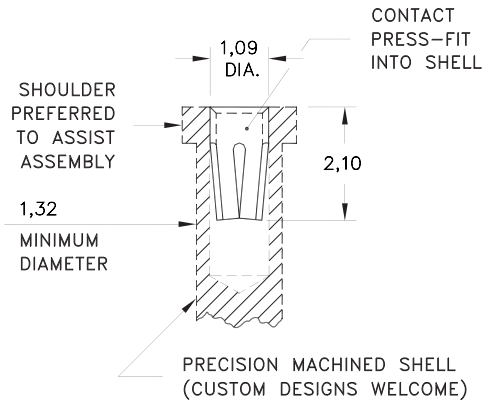

CONTACT MATERIAL:
BERYLLIUM COPPER Alloy 172, Heat Treated

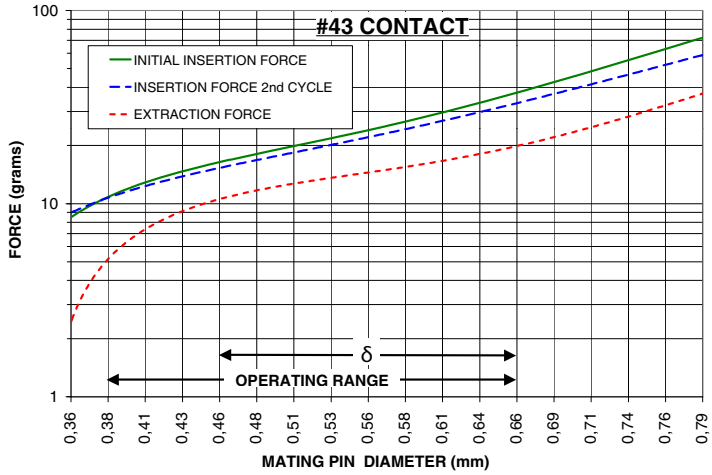

The insertion/extraction/normal force characteristics above were derived using 0,76 micrometers gold plated contact and polished steel gauge pins having a bullet-shaped tip.

The curves represent typical average values; they are best used to compare the differences between similar size contacts and to guide you in selecting one that is suitable for your application. Your results may vary, so for your specification, we encourage you to obtain complimentary samples for your evaluation.

#15 CONTACT

FOR 0,56-0,81 DIAMETER PINS (δ=0,10)
6-FINGER (see page 214)

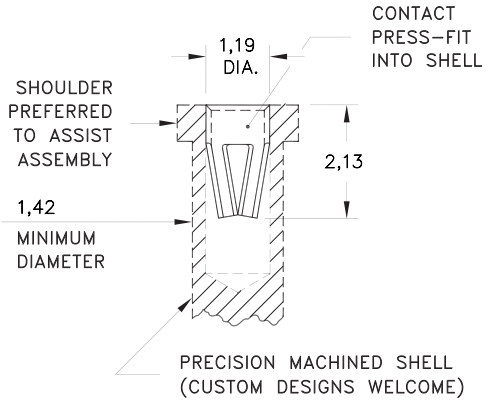

CONTACT MATERIAL:
BERYLLIUM COPPER Alloy 172, Heat Treated

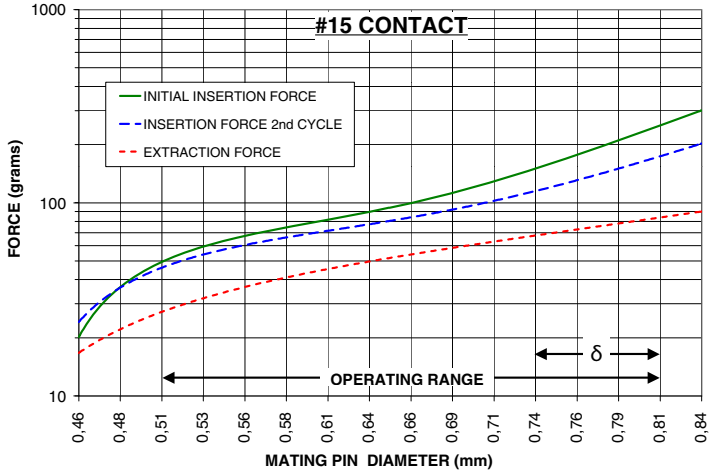

The insertion/extraction/normal force characteristics above were derived using 0,76 micrometers gold plated contact and polished steel gauge pins having a bullet-shaped tip.

The curves represent typical average values; they are best used to compare the differences between similar size contacts and to guide you in selecting one that is suitable for your application. Your results may vary, so for your specification, we encourage you to obtain complimentary samples for your evaluation.

#06 CONTACT

FOR 0,56-0,81 DIAMETER PINS (δ=0,18)
4-FINGER, GROUP D (see page 214)

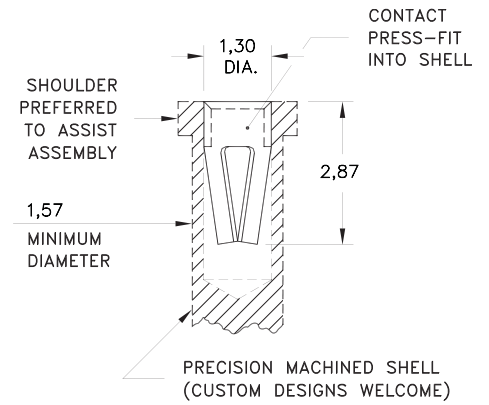

CONTACT MATERIAL:
BERYLLIUM COPPER Alloy 172, Heat Treated

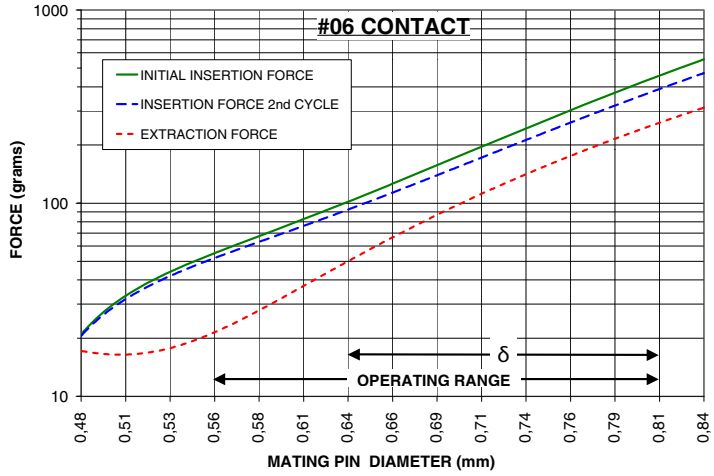

The insertion/extraction/normal force characteristics above were derived using 0,76 micrometers gold plated contact and polished steel gauge pins having a bullet-shaped tip.

The curves represent typical average values; they are best used to compare the differences between similar size contacts and to guide you in selecting one that is suitable for your application. Your results may vary, so for your specification, we encourage you to obtain complimentary samples for your evaluation.

CONTACT DATA

Insertion / Extraction Force Graphs

#26 CONTACT

FOR 0,56-0,81 DIAMETER PINS (δ=0,13)
4-FINGER, GROUP D (see page 214)

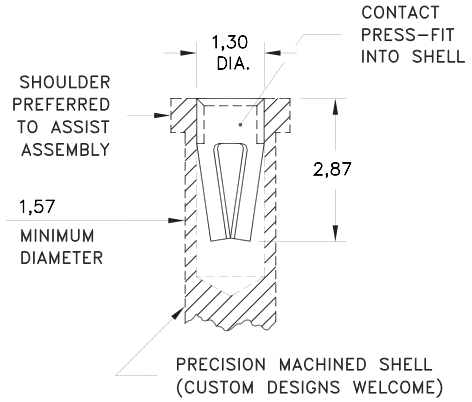

CONTACT MATERIAL:
BERYLLIUM NICKEL Alloy 360, Heat Treated

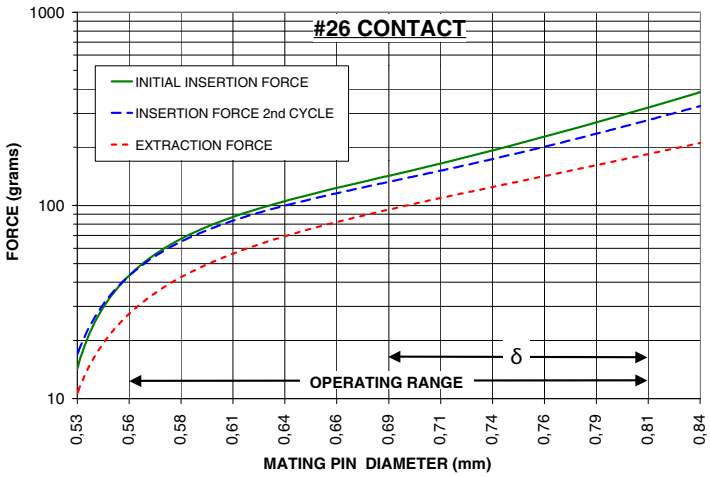

The insertion/extraction/normal force characteristics above were derived using 0,76 micrometers gold plated contact and polished steel gauge pins having a bullet-shaped tip.

The curves represent typical average values; they are best used to compare the differences between similar size contacts and to guide you in selecting one that is suitable for your application. Your results may vary, so for your specification, we encourage you to obtain complimentary samples for your evaluation.

#16 CONTACT

FOR 0,56-0,86 DIA. & 0,64 SQ. (δ=0,15)
6-FINGER, GROUP D (see page 214)

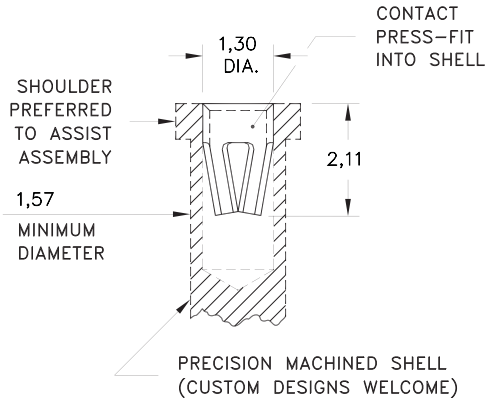

CONTACT MATERIAL:
BERYLLIUM COPPER Alloy 172, Heat Treated

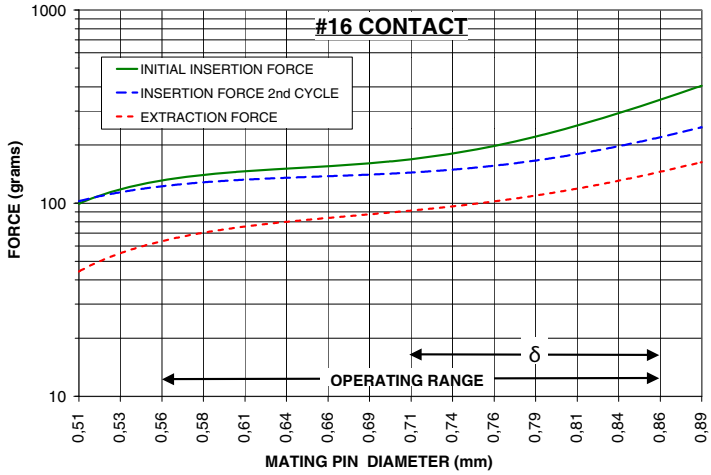

The insertion/extraction/normal force characteristics above were derived using 0,76 micrometers gold plated contact and polished steel gauge pins having a bullet-shaped tip.

The curves represent typical average values; they are best used to compare the differences between similar size contacts and to guide you in selecting one that is suitable for your application. Your results may vary, so for your specification, we encourage you to obtain complimentary samples for your evaluation.

#47 CONTACT

FOR 0,64-0,94 DIA. & 0,64 SQ. (δ=0,28)
6-FINGER, GROUP D (see page 214)

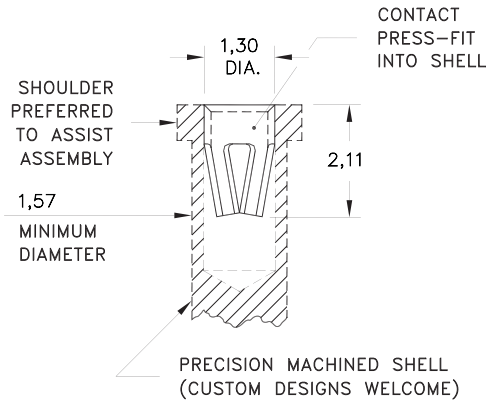

CONTACT MATERIAL:
BERYLLIUM COPPER Alloy 172, Heat Treated

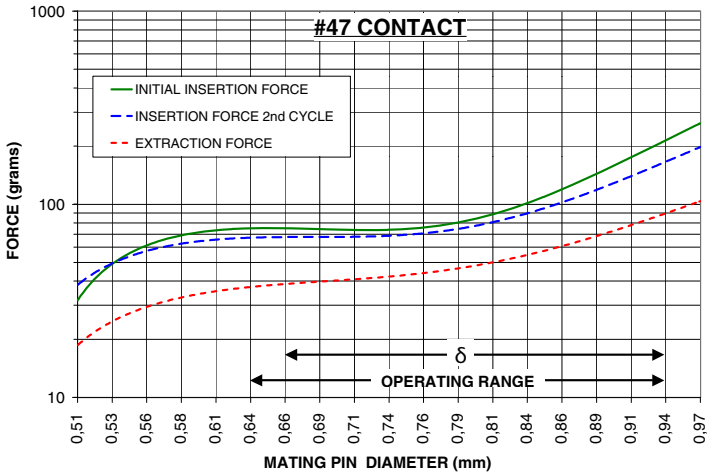

The insertion/extraction/normal force characteristics above were derived using 0,76 micrometers gold plated contact and polished steel gauge pins having a bullet-shaped tip.

The curves represent typical average values; they are best used to compare the differences between similar size contacts and to guide you in selecting one that is suitable for your application. Your results may vary, so for your specification, we encourage you to obtain complimentary samples for your evaluation.

CONTACT DATA

Insertion / Extraction Force Graphs

#18 CONTACT

FOR 0,94-1,09 DIAMETER PINS (δ=0,10)
6-FINGER (see page 214)

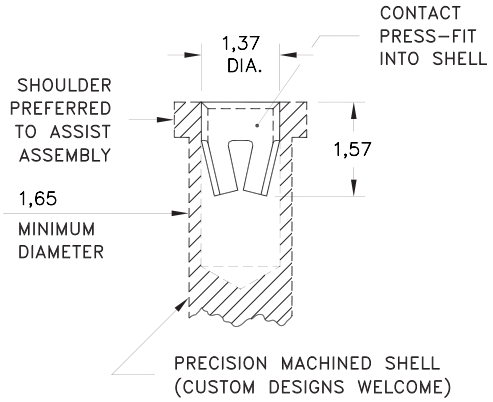

CONTACT MATERIAL:
BERYLLIUM COPPER Alloy 172, Heat Treated

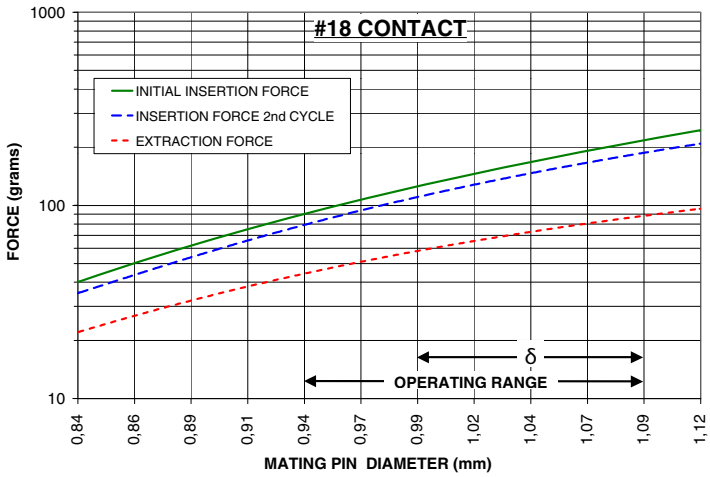

The insertion/extraction/normal force characteristics above were derived using 0,76 micrometers gold plated contact and polished steel gauge pins having a bullet-shaped tip.

The curves represent typical average values; they are best used to compare the differences between similar size contacts and to guide you in selecting one that is suitable for your application. Your results may vary, so for your specification, we encourage you to obtain complimentary samples for your evaluation.

#36 CONTACT

FOR 0,56-1,07 DIAMETER PINS (δ=0,56)
4-FINGER, GROUP E (see page 214)

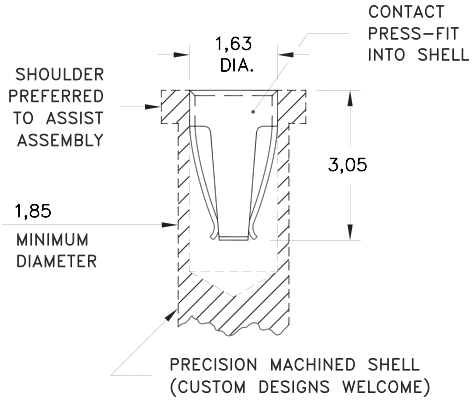

CONTACT MATERIAL:
BERYLLIUM COPPER Alloy 172, Heat Treated

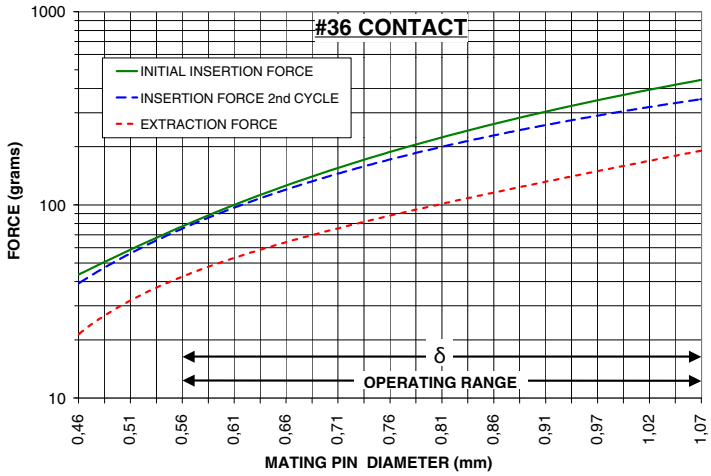

The insertion/extraction/normal force characteristics above were derived using 0,76 micrometers gold plated contact and polished steel gauge pins having a bullet-shaped tip.

The curves represent typical average values; they are best used to compare the differences between similar size contacts and to guide you in selecting one that is suitable for your application. Your results may vary, so for your specification, we encourage you to obtain complimentary samples for your evaluation.

#34 CONTACT

FOR 0,81-1,17 DIAMETER PINS (δ=0,25)
4-FINGER, GROUP E (see page 214)

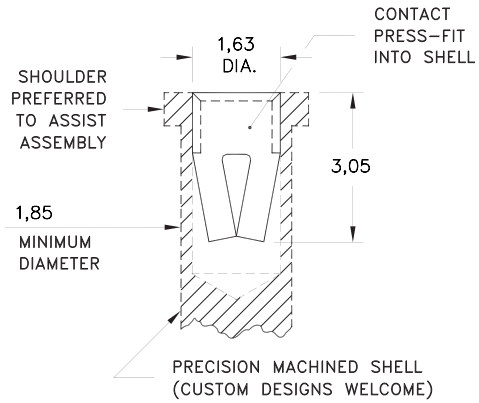

CONTACT MATERIAL:
BERYLLIUM COPPER Alloy 172, Heat Treated

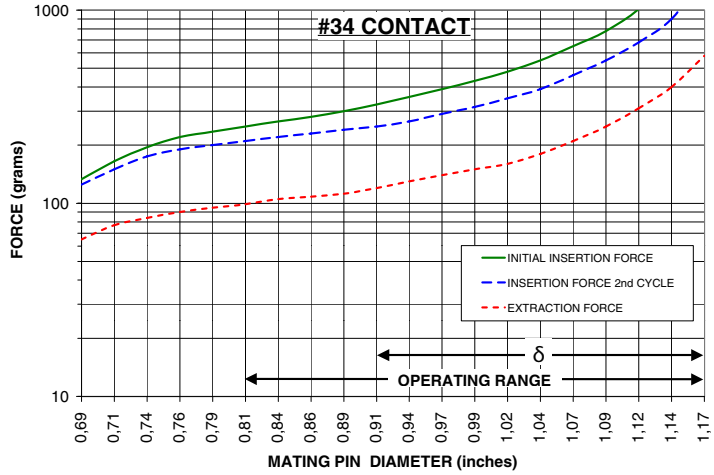

The insertion/extraction/normal force characteristics above were derived using 0,76 micrometers gold plated contact and polished steel gauge pins having a bullet-shaped tip.

The curves represent typical average values; they are best used to compare the differences between similar size contacts and to guide you in selecting one that is suitable for your application. Your results may vary, so for your specification, we encourage you to obtain complimentary samples for your evaluation.

CONTACT DATA

Insertion / Extraction Force Graphs

#49 CONTACT

FOR 0,81-1,17 DIAMETER PINS (δ=0,15)
4-FINGER, GROUP E (see page 214)

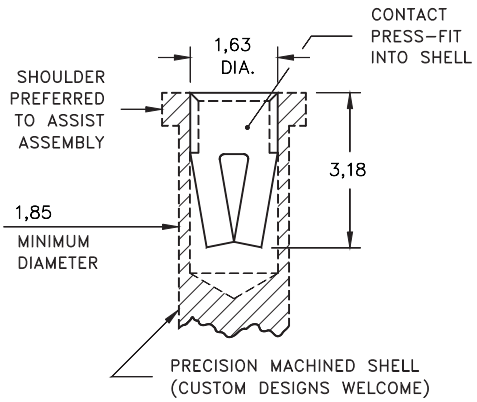

CONTACT MATERIAL:
BERYLLIUM COPPER Alloy 172, Heat Treated

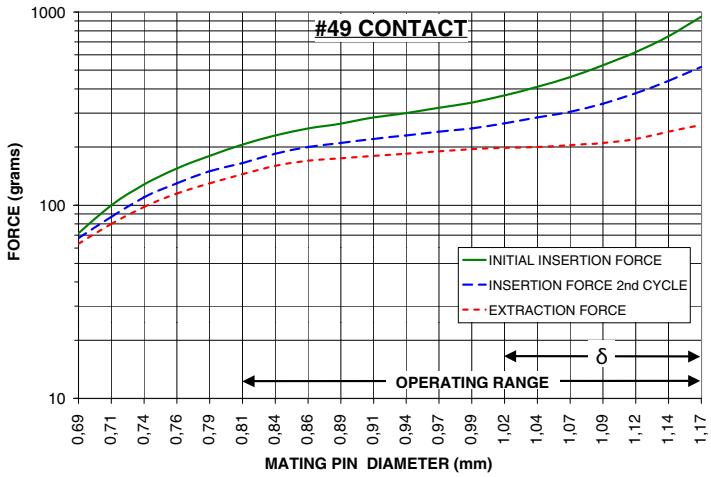

The insertion/extraction/normal force characteristics above were derived using 0,76 micrometers gold plated contact and polished steel gauge pins having a bullet-shaped tip.

The curves represent typical average values; they are best used to compare the differences between similar size contacts and to guide you in selecting one that is suitable for your application. Your results may vary, so for your specification, we encourage you to obtain complimentary samples for your evaluation.

#24 CONTACT

FOR 0,81-1,17 DIAMETER PINS (δ=0,23)
4-FINGER, GROUP E (see page 214)

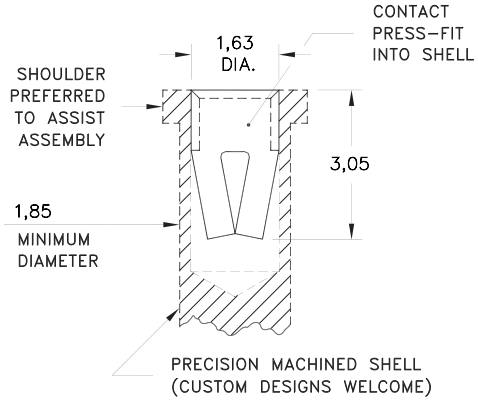

CONTACT MATERIAL:
BERYLLIUM NICKEL Alloy 360, Heat Treated

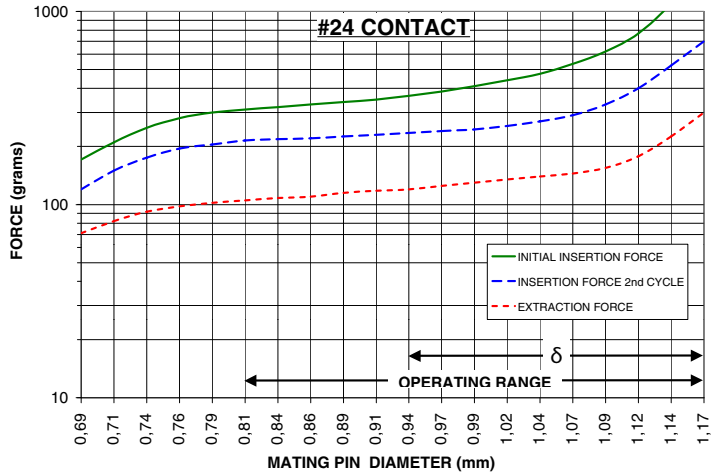

The insertion/extraction/normal force characteristics above were derived using 0,76 micrometers gold plated contact and polished steel gauge pins having a bullet-shaped tip.

The curves represent typical average values; they are best used to compare the differences between similar size contacts and to guide you in selecting one that is suitable for your application. Your results may vary, so for your specification, we encourage you to obtain complimentary samples for your evaluation.

#02 CONTACT

FOR 1,02-1,27 DIAMETER PINS (δ=0,15)
6-FINGER, GROUP F (see page 214)

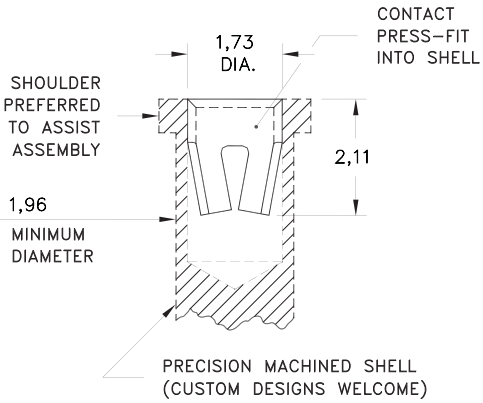

CONTACT MATERIAL:
BERYLLIUM COPPER Alloy 172, Heat Treated

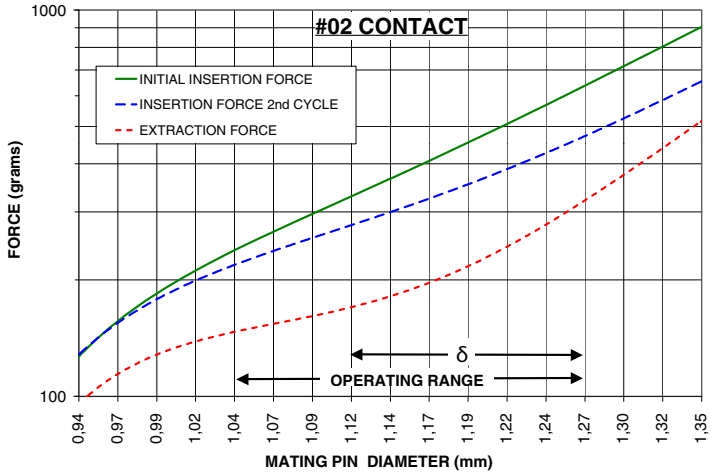

The insertion/extraction/normal force characteristics above were derived using 0,76 micrometers gold plated contact and polished steel gauge pins having a bullet-shaped tip.

The curves represent typical average values; they are best used to compare the differences between similar size contacts and to guide you in selecting one that is suitable for your application. Your results may vary, so for your specification, we encourage you to obtain complimentary samples for your evaluation.

CONTACT DATA

Insertion / Extraction Force Graphs

#28 CONTACT

FOR 1,07-1,32 DIAMETER PINS (δ=0,13)
6-FINGER, GROUP F (see page 214)

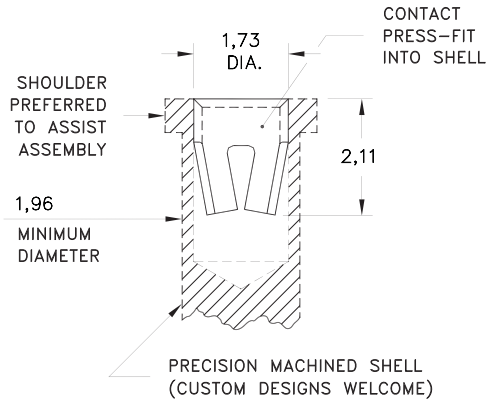

CONTACT MATERIAL:
BERYLLIUM COPPER Alloy 172, Heat Treated

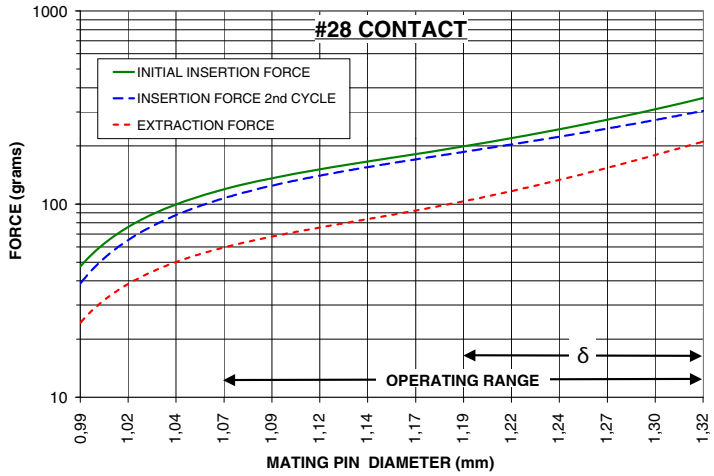

The insertion/extraction/normal force characteristics above were derived using 0,76 micrometers gold plated contact and polished steel gauge pins having a bullet-shaped tip.

The curves represent typical average values; they are best used to compare the differences between similar size contacts and to guide you in selecting one that is suitable for your application. Your results may vary, so for your specification, we encourage you to obtain complimentary samples for your evaluation.

#03 CONTACT

FOR 1,02-1,52 DIAMETER PINS (δ=0,25)
4-FINGER (see page 214)

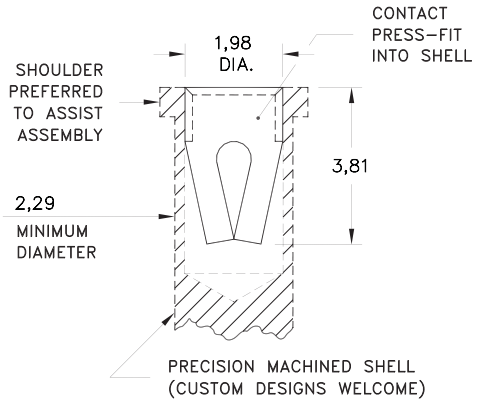

CONTACT MATERIAL:
BERYLLIUM COPPER Alloy 172, Heat Treated

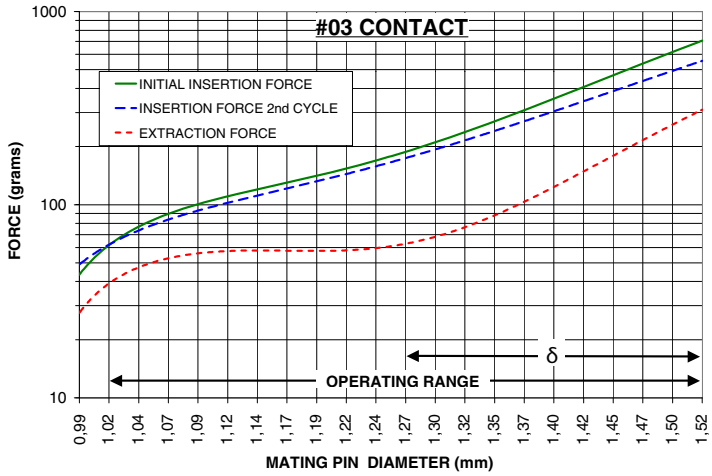

The insertion/extraction/normal force characteristics above were derived using 0,76 micrometers gold plated contact and polished steel gauge pins having a bullet-shaped tip.

The curves represent typical average values; they are best used to compare the differences between similar size contacts and to guide you in selecting one that is suitable for your application. Your results may vary, so for your specification, we encourage you to obtain complimentary samples for your evaluation.

#23 CONTACT

FOR 1,14-1,65 DIAMETER PINS (δ=0,20)
6-FINGER, GROUP G (see page 214)

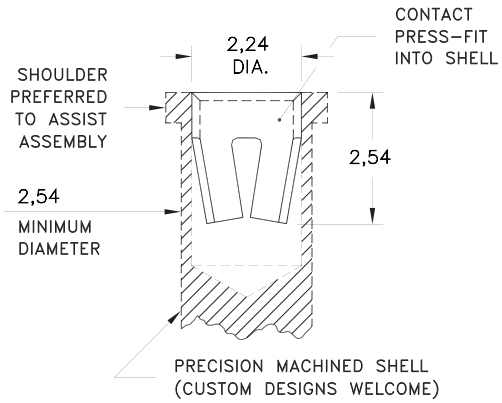

CONTACT MATERIAL:
BERYLLIUM COPPER Alloy 172, Heat Treated

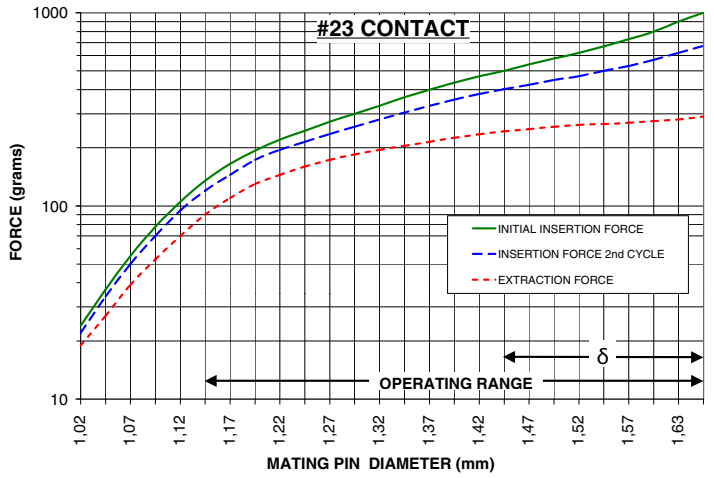

The insertion/extraction/normal force characteristics above were derived using 0,76 micrometers gold plated contact and polished steel gauge pins having a bullet-shaped tip.

The curves represent typical average values; they are best used to compare the differences between similar size contacts and to guide you in selecting one that is suitable for your application. Your results may vary, so for your specification, we encourage you to obtain complimentary samples for your evaluation.

CONTACT DATA

Insertion / Extraction Force Graphs

#13 CONTACT

FOR 1,22-1,63 DIAMETER PINS (δ=0,25)
4-FINGER, GROUP G (see page 214)

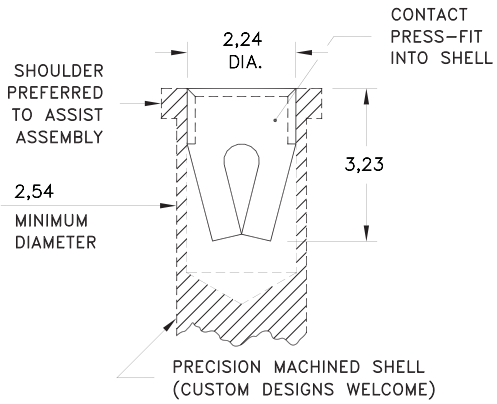

CONTACT MATERIAL:
BERYLLIUM COPPER Alloy 172, Heat Treated

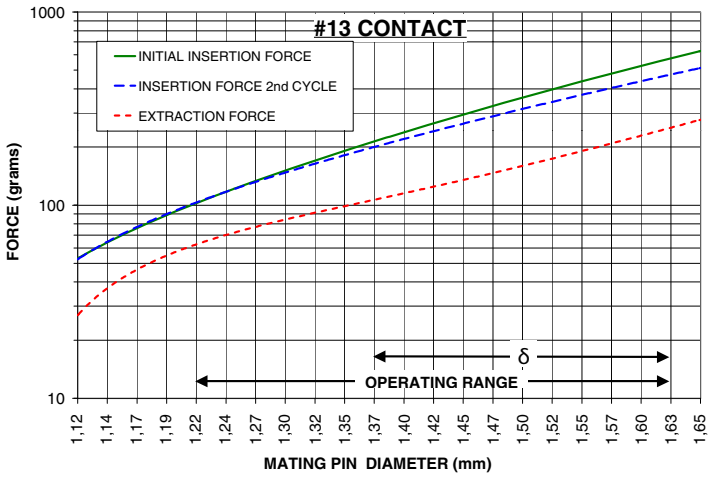

The insertion/extraction/normal force characteristics above were derived using 0,76 micrometers gold plated contact and polished steel gauge pins having a bullet-shaped tip.

The curves represent typical average values; they are best used to compare the differences between similar size contacts and to guide you in selecting one that is suitable for your application. Your results may vary, so for your specification, we encourage you to obtain complimentary samples for your evaluation.

#33 CONTACT

FOR 1,22-1,63 DIAMETER PINS (δ=0,20)
4-FINGER, GROUP G (see page 214)

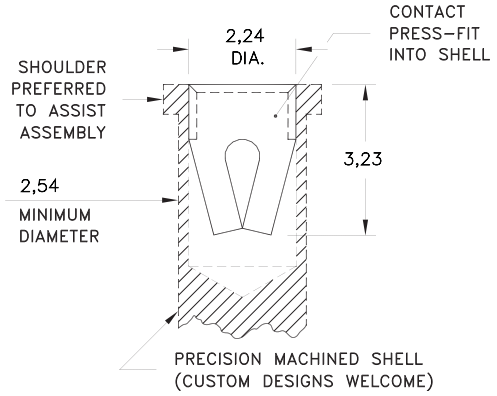

CONTACT MATERIAL:
BERYLLIUM NICKEL Alloy 360, Heat Treated

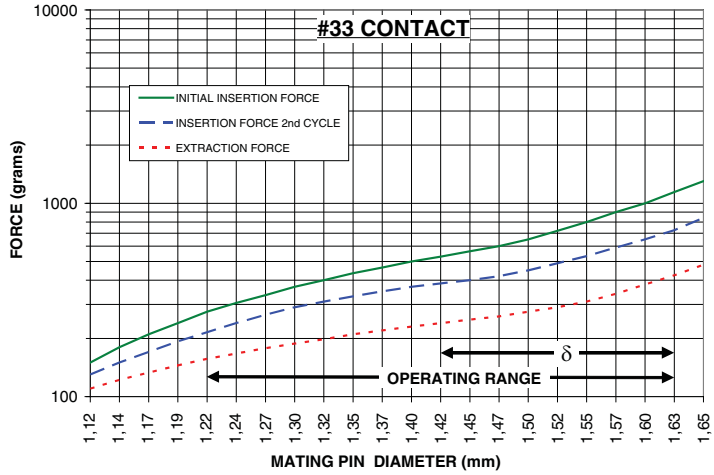

The insertion/extraction/normal force characteristics above were derived using 0,76 micrometers gold plated contact and polished steel gauge pins having a bullet-shaped tip.

The curves represent typical average values; they are best used to compare the differences between similar size contacts and to guide you in selecting one that is suitable for your application. Your results may vary, so for your specification, we encourage you to obtain complimentary samples for your evaluation.

#07 CONTACT

FOR 1,65-2,08 DIAMETER PINS (δ=0,33)
4-FINGER, GROUP H (see page 214)

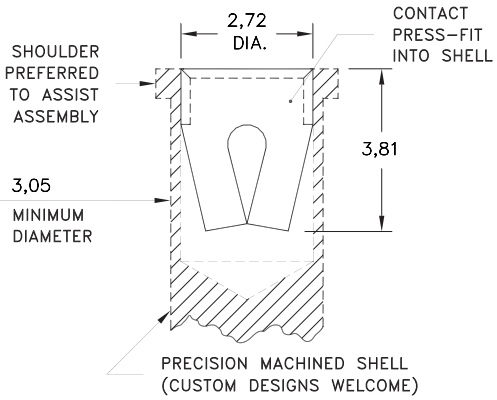

CONTACT MATERIAL:
BERYLLIUM COPPER Alloy 172, Heat Treated

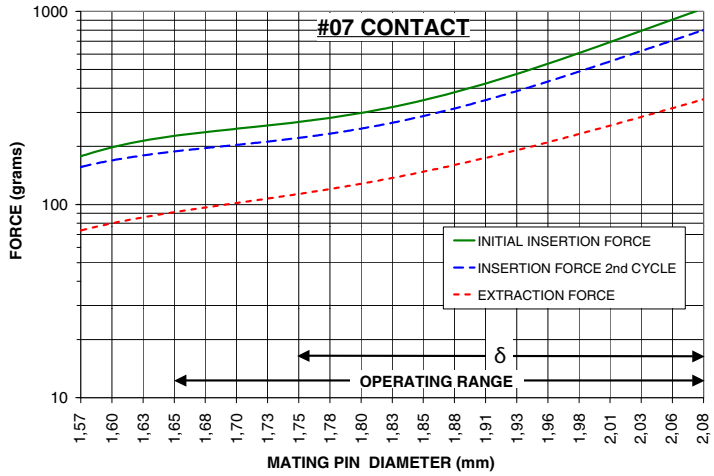

The insertion/extraction/normal force characteristics above were derived using 0,76 micrometers gold plated contact and polished steel gauge pins having a bullet-shaped tip.

The curves represent typical average values; they are best used to compare the differences between similar size contacts and to guide you in selecting one that is suitable for your application. Your results may vary, so for your specification, we encourage you to obtain complimentary samples for your evaluation.

CONTACT DATA

Insertion / Extraction Force Graphs

#27 CONTACT

FOR 1,65-2,08 DIAMETER PINS (δ=0,30)
4-FINGER, GROUP H (see page 214)

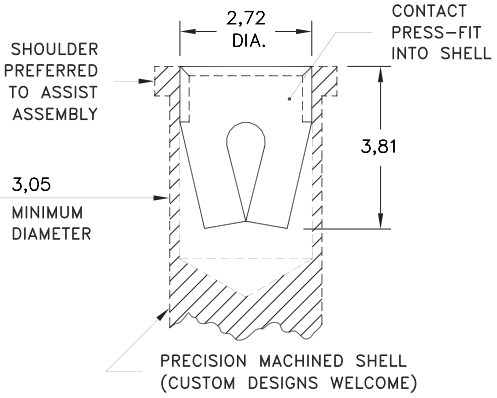

CONTACT MATERIAL:
BERYLLIUM NICKEL Alloy 360, Heat Treated

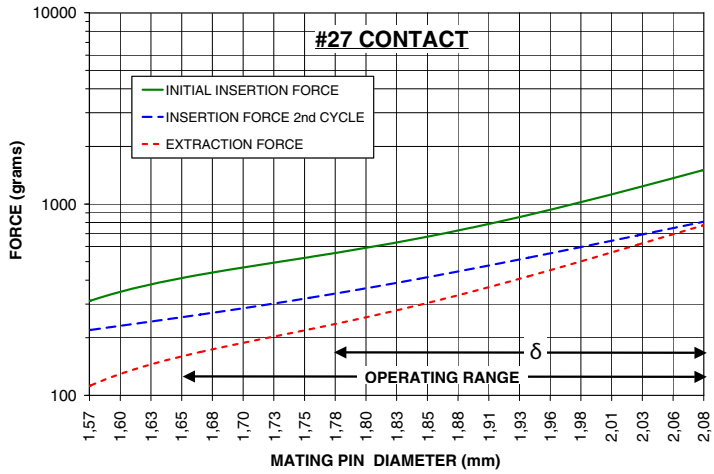

The insertion/extraction/normal force characteristics above were derived using 0,76 micrometers gold plated contact and polished steel gauge pins having a bullet-shaped tip.

The curves represent typical average values; they are best used to compare the differences between similar size contacts and to guide you in selecting one that is suitable for your application. Your results may vary, so for your specification, we encourage you to obtain complimentary samples for your evaluation.

#14 CONTACT

FOR 1,65-2,08 DIAMETER PINS (δ=0,36)
4-FINGER, GROUP H (see page 214)

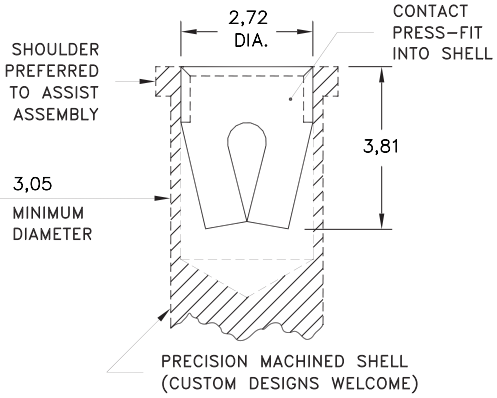

CONTACT MATERIAL:
BERYLLIUM COPPER Alloy 172, Heat Treated

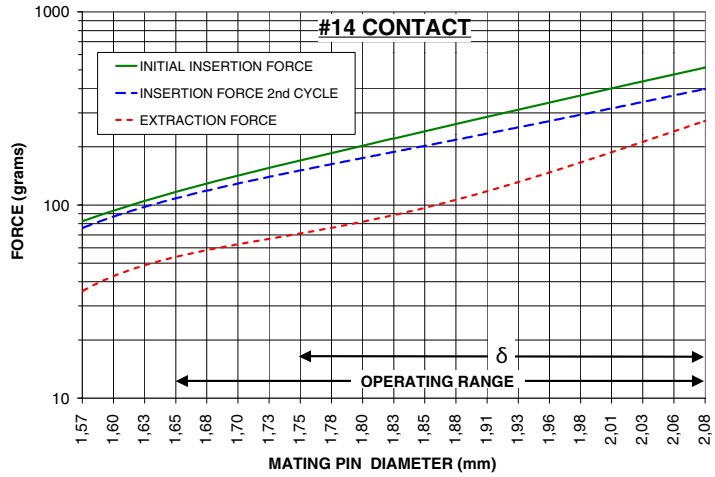

The insertion/extraction/normal force characteristics above were derived using 0,76 micrometers gold plated contact and polished steel gauge pins having a bullet-shaped tip.

The curves represent typical average values; they are best used to compare the differences between similar size contacts and to guide you in selecting one that is suitable for your application. Your results may vary, so for your specification, we encourage you to obtain complimentary samples for your evaluation.

#08 CONTACT

FOR 2,13-2,59 DIAMETER PINS (δ=0,28)
6-FINGER (see page 214)

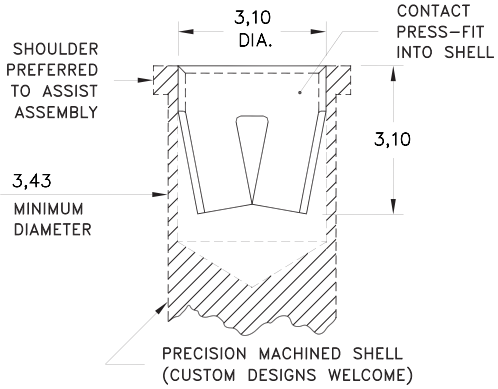

CONTACT MATERIAL:
BERYLLIUM COPPER Alloy 172, Heat Treated

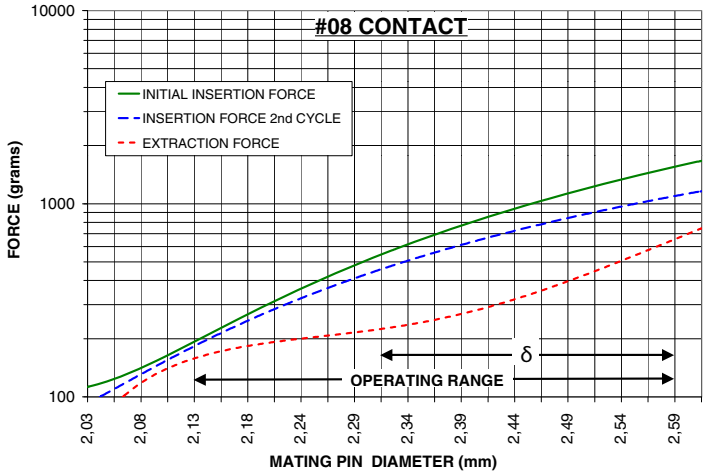

The insertion/extraction/normal force characteristics above were derived using 0,76 micrometers gold plated contact and polished steel gauge pins having a bullet-shaped tip.

The curves represent typical average values; they are best used to compare the differences between similar size contacts and to guide you in selecting one that is suitable for your application. Your results may vary, so for your specification, we encourage you to obtain complimentary samples for your evaluation.

DETAILED PROPERTIES OF MILL-MAX RAW MATERIALS
(including RoHS 2002/95/EC requirements)

PROPERTIES OF METALS USED BY MILL-MAX

Copper alloy rod and wire for precision-machined pins, receptacles & solder terminals **(Alloys C36000 & C54400 contain 3 to 4% lead to permit "free machining" and is permitted by EC Directive 2002/95 Annex 6; so all pin materials are RoHS compliant).**

BRASS ALLOY 360 (UNS C36000) per ASTM B 16
PHOSPHOR BRONZE Alloy 544 (UNS C54400) per ASTM B 139
TELLURIUM COPPER Alloy 145 (UNS C14500) per ASTM B 301

Spring alloy strip for stamping "multi-finger" spring contacts
BERYLLIUM COPPER Alloy 172 (UNS C17200) per ASTM B 194
BERYLLIUM NICKEL Alloy 360 (UNS N03360)

Properties of BRASS:
Stock diameters available: 1,57/1,83/1,98/2,36/3,18/3,96/4,75/6,35mm
Chemical composition: Cu 61.5%, Zn 35.4%, Pb 3.1%
Temper as machined: H02/H04
Modulus of elasticity: $14x10^6$ psi
Tensile strength: $70\text{-}90x10^3$ psi
Hardness as machined: 80-90 Rockwell B
After machining, brass parts are often annealed (softened) for subsequent bending, swaging or crimping. A partial anneal down to 60±10 RB is recommended for 90° bends, a full anneal down to 35±15 RB is recommended for pins or terminals that are swaged (riveted) to a circuit board or crimped to a wire.
Density: .307 lbs/in3
Electrical conductivity: 26% IACS*
Melting point: 900°C/885°C (liquidus/solidus)

Properties of PHOSPHOR BRONZE:
Used for pins requiring more durability than brass.
Stock diameters available: 1,83/1,98mm
Chemical composition: Cu 88%, Sn 4%, Zn 4%, Pb 4%
Temper as machined: H04
Modulus of elasticity: $15x10^6$ psi
Tensile strength: $70\text{-}80x10^3$ psi
Hardness as machined: 83 Rockwell B
Density: .321 lbs/in3
Electrical conductivity: 19% IACS*
Melting point: 1000°C/930°C (liquidus/solidus)

Properties of TELLURIUM COPPER:
Used for pins requiring a higher current carrying capacity than brass or phosphor bronze.
Stock diameters available: 2,01/2,36/3,18/3,96mm
Chemical composition: Cu 99.44%, Te .55%, P .008%
Temper as machined: H02
Modulus of elasticity: $17x10^6$ psi
Tensile strength: $43x10^3$ psi
Hardness as machined: 43 Rockwell B
Density: .323 lbs/in3
Electrical conductivity: 93% IACS*
Thermal conductivity: 91% IACS*
Melting point: 1075ºC/1051ºC (liquidus/solidus)

Properties of BERYLLIUM COPPER:
Chemical composition: Cu 98.1%, Be 1.9%
Temper as stamped: TD01
Properties after heat treatment (TH01):
Modulus of Elasticity: $19x10^6$ psi
Tensile Strength: $175\text{-}205x10^3$ psi
Yield Strength (0.2% offset): $150\text{-}185x10^3$ psi
Elongation: 3-10%
Stress Relaxation†: 96% of stress remains after 1,000 hours @ 100 ºC
70% of stress remains after 1,000 hours @ 200 ºC
Hardness: 36-43 Rockwell C
Density: .298 lbs/in3
Electrical Conductivity: 22% IACS*
Melting point: 980°C/865°C (liquidus/solidus)

†Since BeCu loses its spring properties over time at high temperatures; it is rated for continuous use up to 150°C. For "down-hole" and "burn-in" applications up to 300°C, Mill-Max offers four contacts (#24, #26, #27 & #38) made from Beryllium Nickel Alloy 360 (UNS N03360)

Properties of BERYLLIUM NICKEL:
Chemical composition: Ni 97.6%, Be 1.9%, Ti 0.5%
Modulus of Elasticity: $27\text{-}30x10^6$ psi
Tensile Strength: $245x10^3$ psi min.
Yield Strength (0.2% offset): $200x10^3$ psi min.
Elongation: 9% min.
Hardness: 49 Rockwell C
Density: .294 lbs/in3
Electrical Conductivity: 7% IACS*
Melting point: 1,325°C/1,195°C (liquidus/solidus)

*International Annealed Copper Standard, i.e.: as a % of pure copper.

PROPERTIES OF PLASTICS USED BY MILL-MAX

Standard plastics used for catalog products:

Injection Molded

PCT Polyester, High Temp (Thermx CG933, black)
Nylon46, High Temp (Stanyl TE250F6 {30% glass} or TE250F9 {45% glass}, black)
PPS, High Temp (Ryton R-4-200)

Machined

FR-4 Epoxy/Glass Laminate. Thicknesses available: 0,25, 0,51, 0,79, 1,19, 1,57, 2,36, 3,18mm (natural color, beige)
FR-4 Epoxy/Glass Laminate, 1,40mm thick (black)
G-30 Polyimide/Glass Laminate, 1,57mm thick (natural color, brown)

TEMPERATURE COMPARISON OF MOLDED INSULATORS

MATERIAL	BRAND	GRADE	HEAT DEFLECTION TEMP. (per ASTM D 648)
PCT Polyester	Thermx	CG-933	529°F (276°C) @ 66 psi
Nylon 46	Stanyl	TE250-F6 or F9	554°F (290°C) @ 264 psi
PPS	Ryton	R-4-200	>500ºF (>260ºC) @ 264 psi

Note: Materials above 446°F (230°C) are considered suitable for "eutectic" reflow soldering, above 500°F (260°C) for "lead-free" reflow soldering.
PCT is the standard plastic used with RoHS "lead-free" plated pins.

MILL-MAX STANDARD PLATINGS (FINISHES):

GOLD per ASTM B 488, Type 1 (99.7% min. gold),
Code C (130-200 HK {Knoop hardness}),
Class (thickness) per customer's requirements

SILVER per ASTM B 700, Type 1 (99.9% min. silver),
Grade B (Bright),
Class S (anti-tarnish treatment),
Thickness (7.5µm used for solder terminals)

TIN/LEAD (93/7) per ASTM B 545 (Appendix X6.3.2.5 to eliminate whisker growth) Class A (2.5µm) or Class B (5µm),
Bright finish (Matte available to order)

ELECTRO-SOLDER (60/40) per ASTM B 579, SC2 (8µm),
Bright finish (Matte available to order)

Standard finishes available for RoHS "lead-free" applications:

GOLD per ASTM B 488, Type 1 (99.7% min. gold),
Code C (130-200 HK {Knoop hardness}),
Class (thickness) per customer's requirements

TIN (100%) per ASTM B 545, Class A (2.5µm) or Class B (5µm),
Matte finish (With whisker and oxide inhibitors and a nickel underplate)

ALL MILL-MAX PARTS REQUIRE AN UNDERPLATE:

Brass parts need a barrier plate to prevent zinc diffusion, 1,27µm min. nickel or 2,54µm min. copper is recommended by ASTM B 545 & 579. ASTM B 488 also recommends a 1,27µm min. nickel barrier plate beneath gold to prevent copper diffusion inherent with all copper alloy products.

MILL-MAX STANDARD UNDERPLATES:

NICKEL per ASTM B 689, Type 2 (Bright),
Class 1.25 (1.25µm) or Class 2.5 (2.5µm)

Also available for military & "non-magnetic" applications:

COPPER per ASTM B 734, Class 2.5 (2.5µm) or Class 5 (5µm)

Annealing - Refers to a brass pin that has been softened by heat treatment which makes the pin easier to crimp, rivet (swage) or bend.

Carrier - An assembly consisting of an insulator with male pins onto which receptacles are loaded. This assembly is employed as a fixture during the soldering operation and is then removed leaving a PC board populated with individual receptacles. Female carriers that load male pins are also available for special applications.

Clip - See Contact.

Closed Entry - Refers to female contacts where the front rim prevents the insertion of an oversize pin that would otherwise damage the contact.

Compliancy - Contact's ability to accept multiple insertions and extractions of a wide range of pin shapes and sizes while retaining its original configuration.

Compliant Press Fit - Method of mounting an interconnect component to a PC board where a drilled and slotted receptacle or pin is pressed into a plated-through-hole without damaging the hole.

Constant Usage Temperature (CUT) - Constant Usage Temperature is a measure of the maximum temperature that a material may be exposed to for long periods of time, 1000 - 1500 hrs., before degradation of its electrical and mechanical properties occurs.

Contact (and Contact Clip) - Multi-finger spring insert of a receptacle which completes the electrical path between a male pin and a female receptacle. Also referred to as a clip.

Contact Rating - Current carrying capability of a contact measured in amperes with respect to temperature rise above ambient.

Contact Resistance - The electrical resistance at the point of connection determined by the contact geometry, area of contact, plating and normal force.

Coplanarity – Refers to the measurement of multiple points and their distance from a respective plane. This is particularly useful for surface mount parts to determine the maximum amount of difference in the height of the surfaces that need to be soldered.

Electroplating - The electrodepositing of a metal coating on a conductive object such as a pin, shell, or contact clip.

Electro-vibratory Plating - An electroplating system where the parts are processed in a vibrating basket which ensures uniform plating thickness and avoids damage to delicate parts.

End Stackable - The ability for connectors to be mounted end to end while maintaining grid or spacing.

Extraction Force (or Withdrawal Force) - The force required to remove a lead from a contact.

Epoxy - Woven glass cloth epoxy laminate. Classified as a thermoset, the woven fibers of these materials enable them to withstand high temperatures without being damaged. Cut from large sheets of material, the insulator is then machined on a high speed drill/router, the same way as printed circuit boards are fabricated.

Electrostatic Discharge (ESD) - The momentary electric current that flows between two objects that may cause damage to electronic equipment.

Flash (Plating) - A very thin plating, usually less than 10 micro inches, only enough metal to uniformly cover the surface of the base metal.

Flatness – Sometimes used in place of coplanarity, flatness refers to the amount of variation of a plane or surface.

Floating Contact - In surface mount sockets, a receptacle designed to move up and down freely in an insulator to compensate for unevenly dispensed solder paste.

Free Machining Alloy - An alloy which is easy to machine, e.g. brass alloy 360.

Fretting - A form of corrosion caused by vibration.

Gas Tight Connection - An electrical connection of sufficient pressure to prevent the intrusion of a corrosive atmosphere into the contact area.

Heat Deflection Temperature (HDT) - An industry recognized test for comparing the short term effects of high temperature on plastics.

Heat Treating - The process of using specific heating and cooling cycles to alter the mechanical properties of an alloy. Generally, heat treating can harden or soften a metal depending on the material, the parameters used and the desired physical property.

Hex Press Fit - A method of press-fitting either a pin or receptacle, using a hexagonal cross section, into a plated through-hole without causing damage to the hole while still maintaining a gas tight seal.

High Speed Turning - See Precision-Machined.

Injection Molding - A method of molding plastics by first heating granular plastic to its molten state and injecting it into the mold cavity where the plastic solidifies and is then ejected from the cavity.

Insertion Force - The force required to insert a male lead into a female socket.

Knurl - A vertical serration machined around the diameter of an interconnect pin providing a retention feature for press-fitting in a PC board or insulator and also preventing rotation of the pin.

LCP (Liquid Crystal Polymer) - Classified as a thermoplastic, LCP is a hard, rigid material which exhibits outstanding strength at high temperatures and exceptional strength and toughness in its thin walls. Applications: LCP is used as an insulator material for tight grid (1,27, 2mm) connectors and extremely high temperature requirements.

Mating Pin – The pin used to interconnect two electronic devices by inserting it into the contact. Critical features are diameter, length, and shape (but not limited to.)

Machined - See Precision-Machined.

Migration - For a brass part plated with tin or gold, the migration of zinc from brass to the surface of the plating. This becomes zinc oxide and renders the part unsolderable. Zinc migration is prevented by using a copper or nickel underplate as a barrier.

Nylon 46 - Classified as thermoplastics. Nylon 46 offers superior heat resistance, good electrical properties and excellent toughness in its thin walls, which are desirable characteristics for connector insulators. Its superior strength in thin walls enables the press-fitting of pins in close proximity to each other without cracking or warping the material, making it ideal for molding 2mm and 1,27mm grid insulators. Nylon 46 is suitable for high temperature applications including vapor phase, infra-red reflow and wave soldering operations.

Passive Device or Component – An electronic connector that consumes electrical energy, but does not produce electrical energy. Passive devices are not susceptible to significant ESD damage.

PCB - Printed Circuit Board.

PCT (Polycyclohexane Terephthalate) - Thermoplastic polyester is rated for higher temperatures. PCT is a standard material on DIP and SIP insulators for higher temperature operations. All PGA and surface mount products are molded from PCT and are suitable for infra-red, vapor phase and wave soldering.

Plating - A process in which metals (e.g. gold, tin-lead, nickel, silver) are electrically deposited onto a base metal in very thin and precise thicknesses.

Plated Through-Hole - A hole in a printed circuit board which has metallic walls connected to conductors on the surface or inside the board, in which the component lead is inserted and soldered.

Precision-Machined - Manufacturing process whereby a rapidly turning solid metal rod is cut to precise tolerances.

Receptacle - Female contact consisting of an outer shell and inner spring contact (clip) designed for multiple mating/unmating cycles with a male pin or component lead.

Screw-Machined - See Precision-Machined.

Secondary Machining - A process in which holes, slots, flats, squares or other special features may be machined onto a pin or receptacle after the basic shape of the part has been turned on a high speed lathe.

Shrink DIP Package - An IC which has a pin spacing of 1,78mm on centers.

Skiving – The removal of a thin amount of plating when pins or contacts are press fit. For example, soft platings may yield some amount of skiving upon press fitting into an insulator or board. Skiving may also appear under a contact clip pressed into a receptacle shell.

Standoff - A protrusion at the bottom of the connector used to raise it off the PC board to aid in solder fillet formation, board inspection, flux removal and cleaning.

Swage Mount - A type of mounting commonly used with solder terminals and printed circuit pins where one end of the terminal is flared out (riveted) securing it to the PCB.

Thermal Coefficient of Expansion (TCE) - Expansion of material caused by an increase in temperature.

Thermoset - Type of plastic which is heat cured into a permanent shape, and due to chemical reaction, cannot be remelted.

Thermoplastics - Type of plastic which is molded under heat and pressure and can be remelted & reused many times.

Top Plate - Final surface plating over base metal and underplating.

Underplate - Plating between the base metal and the top plating.

Withdrawal Force (or Extraction Force) - The force required to remove a lead from a contact.

Wrapost (Terminal or Receptacle) - The length of square cross section of certain pins and receptacles which is used for making electrical connections via wire wrapping.
Wire wrapping is a process in which wire is wrapped around the post to form a gas-tight connection without soldering.

INDEX

NUMERICAL LISTING AND LOCATION OF MILL-MAX SOCKET ASSEMBLY NUMBERS WITH REFERENCE TO MILL-MAX PINS

MILL-MAX SOCKET ASSEMBLY NUMBER	MILL-MAX PIN # REF.	PAGE #
101-XX-XXX-41-56X000	1001/0156	27
104-XX-XXX-41-770000	0477	28
104-XX-XXX-41-780000	0478	28
110-XX-210-10-001000	1001	63
110-XX-210-10-002000	1001	64
110-XX-3XX-10-001000	1001	63
110-XX-3XX-10-002000	1001	64
110-XX-3XX-10-003000	1001	64
110-XX-3XX-10-004000	1001	64
110-XX-3XX-10-005000	1001	64
110-XX-XXX-41-001000	1001	22
110-XX-XXX-41-105000	1005	36
110-XX-XXX-41-530000	1001	32
110-XX-XXX-41-605000	1005	26
110-XX-XXX-41-801000	1001	30
111-XX-XXX-41-001000	0134	23
113-XX-XXX-41-117000	1334/1434	39
114-XX-XXX-41-117000	1434	38
115-XX-XXX-41-001000	0501	24
115-XX-XXX-41-003000	1534	25
116-XX-XXX-41-001000	0153-5	43
116-XX-XXX-41-003000	0153-2	43
116-XX-XXX-41-006000	0153-1	43
116-XX-XXX-41-007000	0153-3	43
116-XX-XXX-41-008000	0153-4	43
117-XX-XXX-41-005000	1802	57
117-XX-XXX-41-105000	1802	58
121-XX-XXX-41-001000	0040-1	41
122-XX-XXX-41-001000	0089-2	41
122-XX-XXX-41-801000	0089-2	30
123-XX-XXX-41-001000	0088-3	41
123-XX-XXX-41-801000	0088-3	30
124-XX-XXX-41-002000	0086-4	41
126-XX-XXX-41-001000	2601	42
126-XX-XXX-41-002000	2602	42
126-XX-XXX-41-003000	2603	42
127-XX-XXX-41-002000	1702-2	57
127-XX-XXX-41-003000	1703-3	57
134-XX-XXX-00-000000	3400	54
134-XX-XXX-00-010000	3401	54
134-XX-XXX-00-020000	3402	54
134-XX-XXX-00-050000	3405	54
134-XX-XXX-00-100000	3410	54
142-XX-XXX-00-591000	4259-1	55
142-XX-XXX-00-592000	4259-2	55
142-XX-XXX-00-593000	4259-3	55
142-XX-XXX-00-594000	4259-4	55
146-XX-XXX-41-012000	4612	29
146-XX-XXX-41-013000	4613	29
150-XX-XXX-00-001000	0290	48
150-XX-XXX-00-106000	3404	56
151-XX-XXX-00-003000	5503	52
151-XX-XXX-00-004000	5504	52
151-XX-XXX-00-005000	5505	52
151-XX-XXX-00-009000	5509	53
151-XX-XXX-00-010000	5510	53
151-XX-XXX-00-011000	5511	53
153-XX-XXX-00-001000	5301	48
160-XX-XXX-00-001000	0282	49
162-XX-XXX-00-001000	1106-2	49
162-XX-XXX-00-180000	6218	59
162-XX-XXX-30-180000	6218	60

MILL-MAX SOCKET ASSEMBLY NUMBER	MILL-MAX PIN # REF.	PAGE #
163-XX-XXX-00-001000	1106-3	49
170-XX-XXX-00-001000	0700	50
173-XX-XXX-00-001000	0730-3	50
180-XX-XXX-00-001000	8000	51
182-XX-XXX-00-001000	8301-2	51
183-XX-XXX-00-001000	8301-3	51
210-XX-XXX-41-001000	1001	31
210-XX-XXX-41-101000	1001	33
210-XX-XXX-41-105000	1005	37
210-XX-XXX-41-105799	1005	37
214-XX-XXX-01-670799	1434	40
214-XX-XXX-01-670800	1434	40
217-XX-764-41-005000	1802	57
222-XX-XXX-41-001000	0089-2	31
223-XX-XXX-41-001000	0088-3	31
223-XX-XXX-41-101000	0038-3	34
227-XX-764-41-002000	1702-2	57
227-XX-764-41-003000	1703-3	57
296-XX-010-30-691800	4077/4078	62
296-XX-010-30-692800	4077/4078	62
299-XX-XXX-10-001000	1103/0903	61
299-XX-XXX-10-002000	1103/0904	61
299-XX-XXX-11-001000	1103/1610	61
299-XX-210-12-001800	1002-X	62
301-XX-1XX-41-560000	0156/1001	73
304-XX-1XX-41-770000	0477	97
304-XX-1XX-41-780000	0478	97
310-XX-1XX-40-023000	1023	77
310-XX-1XX-41-001000	1001	73,89
310-XX-1XX-41-105000	1005	78
310-XX-1XX-41-107000	1005	78
311-XX-1XX-41-001000	0134	89
315-XX-1XX-41-001000	0501	89
315-XX-1XX-41-003000	1534	89
316-XX-1XX-41-001000	0153-5	91
316-XX-1XX-41-003000	0153-2	91
316-XX-1XX-41-006000	0153-1	91
316-XX-1XX-41-007000	0153-3	91
316-XX-1XX-41-008000	0153-4	91
317-XX-121-41-005000	1802	57
317-XX-121-41-105000	1802	58
319-XX-1XX-00-001000	1942	13
319-XX-1XX-00-002000	1940	13
319-XX-1XX-00-005000	1938	13
319-XX-1XX-30-041000	1941	13
321-XX-1XX-41-001000	0040-1	93
322-XX-1XX-41-001000	0089-2	93
323-XX-1XX-41-001000	0088-3	93
324-XX-1XX-41-002000	0086-4	93
326-XX-1XX-41-001000	2601	95
326-XX-1XX-41-002000	2602	95
326-XX-1XX-41-003000	2603	95
327-XX-121-41-002000	1702-2	57
327-XX-121-41-003000	1703-3	57
329-XX-1XX-41-540000	2954	75
329-XX-1XX-00-560000	2956-1	76
330-XX-1XX-00-240000	3024	13
334-XX-1XX-00-000000	3400	105
334-XX-1XX-00-010000	3401	105
334-XX-1XX-00-020000	3402	105
334-XX-1XX-00-050000	3405	105
334-XX-1XX-00-100000	3410	105

INDEX

NUMERICAL LISTING AND LOCATION OF MILL-MAX SOCKET ASSEMBLY NUMBERS WITH REFERENCE TO MILL-MAX PINS

MILL-MAX SOCKET ASSEMBLY NUMBER	MILL-MAX PIN # REF.	PAGE #
335-XX-1XX-00-160000	3516	102
340-XX-1XX-30-780100	4078	69,76
342-XX-1XX-00-591000	4259-1	106
342-XX-1XX-00-592000	4259-2	106
342-XX-1XX-00-593000	4259-3	106
342-XX-1XX-00-594000	4259-4	106
346-XX-1XX-41-012000	4612	97
346-XX-1XX-41-013000	4613	97
350-XX-1XX-00-001000	0290	79,108
350-XX-1XX-00-006000	3404	73
350-XX-1XX-00-106000	3404	78
350-XX-1XX-00-107000	3404	78
351-XX-1XX-00-003000	5503	103
351-XX-1XX-00-004000	5504	103
351-XX-1XX-00-005000	5505	103
351-XX-1XX-00-009000	5509	103
351-XX-1XX-00-010000	5510	103
351-XX-1XX-00-011000	5511	103
351-XX-1XX-40-002000	5102	77
353-XX-1XX-00-001000	5301	110
360-XX-1XX-00-001000	0282	108
362-XX-1XX-00-001000	1106-2	110
363-XX-1XX-00-001000	1106-3	110
364-XX-1XX-00-580000	6458	102
370-XX-1XX-00-001000	0700	108
373-XX-1XX-00-001000	0730-3	110
380-XX-1XX-00-001000	8000	75,108
382-XX-1XX-00-001000	8301-2	110
383-XX-1XX-00-001000	8301-3	110
388-XX-102-11-740799	8874	125
388-XX-102-11-740800	8874	125
395-XX-101-03-380000	8433	124
395-XX-101-07-350000	8994	124
395-XX-101-34-340000	8993	124
399-XX-1XX-10-003000	1103	73
399-XX-1XX-10-008000	1940	13
399-XX-1XX-10-009000	5011	73
399-XX-0XX-21-300000	9930	69
399-XX-0XX-00-310000	9931	69
410-XX-2XX-10-001000	1001	63
410-XX-2XX-10-002000	1001	63
410-XX-2XX-41-001000	1001	74,90
410-XX-2XX-41-105000	1005	78
411-XX-2XX-41-001000	0134	90
414-XX-2XX-41-117000	1434	76
415-XX-2XX-41-001000	0501	90
415-XX-2XX-41-003000	1534	90
416-XX-2XX-41-001000	0153-5	92
416-XX-2XX-41-003000	0153-2	92
416-XX-2XX-41-006000	0153-1	92
416-XX-2XX-41-007000	0153-3	92
416-XX-2XX-41-008000	0153-4	92
419-XX-2XX-00-001000	1942	14
419-XX-2XX-00-002000	1940	14
419-XX-2XX-00-005000	1938	14
419-XX-2XX-30-041000	1941	14
421-XX-2XX-41-001000	0040-1	94
422-XX-2XX-41-001000	0089-2	94
423-XX-2XX-41-001000	0088-3	94
424-XX-2XX-41-002000	0086-4	94
426-XX-2XX-41-001000	2601	96
426-XX-2XX-41-002000	2602	96
426-XX-2XX-41-003000	2603	96
429-XX-2XX-41-540000	2954	75
429-XX-2XX-00-560000	2956-0	76
430-XX-2XX-10-240000	3024	14
435-XX-2XX-00-160000	3516	102
442-XX-2XX-00-591000	4259-1	107
442-XX-2XX-00-592000	4259-2	107
442-XX-2XX-00-593000	4259-3	107
442-XX-2XX-00-594000	4259-4	107
446-XX-2XX-41-012000	4612	98
446-XX-2XX-41-013000	4613	98
450-XX-2XX-00-001000	0290	79,109
450-XX-2XX-00-006000	3404	74
450-XX-2XX-00-106000	3404	78
451-XX-2XX-00-003000	5503	104
451-XX-2XX-00-004000	5504	104
451-XX-2XX-00-005000	5505	104
451-XX-2XX-00-009000	5509	104
451-XX-2XX-00-010000	5510	104
451-XX-2XX-00-011000	5511	104
453-XX-2XX-00-001000	5301	111
460-XX-2XX-00-001000	0282	109
463-XX-2XX-00-001000	1106-3	111
464-XX-2XX-00-580000	6458	102
470-XX-2XX-00-001000	0700	109
473-XX-2XX-00-001000	0730-3	111
480-XX-2XX-00-001000	8000	75,109
483-XX-2XX-00-001000	8301-3	111
499-XX-2XX-10-003000	1103/1602	74
499-XX-2XX-10-008000	1938/1940	14
499-XX-2XX-10-009000	5011/5113	74
507-10-XXX-XX-XXX437	0737	115
510-XX-XXX-XX-XXX00X	1001	114
511-XX-XXX-XX-XXX00X	0134	114
513-XX-XXX-XX-XXX085	1385	114
514-XX-XXX-XX-XXX034	1434	114
515-XX-XXX-XX-XXX00X	0501	114
518-XX-XXX-XX-XXX00X	180X	114
522-XX-XXX-XX-XXX00X	0089-2	114
523-XX-XXX-XX-XXX00X	0088-3	114
540-10-XXX-XX-XXX448	4048	117
540-10-XXX-XX-XXX454	4054	117
540-10-XXX-XX-XXX498	4098	117
540-44-XXX-17-40000X	N/A	120
550-XX-XXX-XX-XXX012	5012	115
551-XX-XXX-XX-XXX003	5503	115
551-XX-XXX-XX-XXX004	5504	115
551-XX-XXX-XX-XXX005	5505	115
579-10-XXX-XX-XXX429	7929	117
582-11-XXX-XX-XXX414	8214	117
587-10-XXX-XX-XXX437	8737	117
594-XX-020-01-007032	8857-X	62
599-11-XXX-XX-XXX428	9928	117
599-10-XXX-XX-XXX429	9929	117
599-11-XXX-XX-XXX442	9942	117
599-XX-XXX-XX-XXX476	9976	115
605-XX-XXX-11-480000	0548	46
605-XX-XXX-XX-XXX048	0548	116
612-XX-XXX-41-001000	0255	44
612-XX-XXX-41-002000	8855	44
612-XX-XXX-41-003000	0135	44
612-XX-XXX-41-004000	0132	44

INDEX

NUMERICAL LISTING AND LOCATION OF MILL-MAX SOCKET ASSEMBLY NUMBERS WITH REFERENCE TO MILL-MAX PINS

MILL-MAX SOCKET ASSEMBLY NUMBER	MILL-MAX PIN # REF.	PAGE #
614-XX-XXX-31-002000	0442	47
614-XX-XXX-31-007000	1407	46
614-XX-XXX-31-012000	0552-1	47
614-XX-XXX-31-018000	0552-2	47
614-XX-XXX-41-001000	1401	45
614-XX-XXX-XX-XXX007	1407	116
614-XX-XXX-XX-XXX012	0552-1	116
614-XX-XXX-XX-XXX0XX	1401	116
712-XX-XXX-41-001000	0255	99
714-XX-XXX-31-007000	1407	100
714-XX-XXX-31-012000	0552-1	101
714-XX-XXX-31-018000	0552-2	101
714-XX-XXX-41-001000	1401	100
800-XX-0XX-10-001000	7007	81
800-XX-0XX-10-002000	5016	80
800-XX-0XX-10-004000	3077	86
800-XX-0XX-20-001000	5005	81
800-XX-0XX-20-201000	5005	88
800-XX-0XX-30-001000	7007	85
800-XX-0XX-40-002000	1502	77
800-XX-0XX-61-001000	5601	83
800-XX-0XX-62-001000	5602	83
801-XX-0XX-10-004000	1313	86
801-XX-0XX-10-001000	1304	81
801-XX-0XX-10-002000	1303	80
801-XX-0XX-10-003000	1303	79
801-XX-0XX-10-012000	1303	80
801-XX-0XX-10-013000	1303	79
801-XX-0XX-10-201000	1304	88
801-XX-0XX-10-212000	1303	88
801-XX-0XX-20-001000	1305	81
801-XX-0XX-20-201000	1305	88
801-XX-0XX-30-001000	1304	85
801-XX-0XX-40-002000	1303	77
801-XX-0XX-61-001000	4614	83
801-XX-0XX-62-001000	4615	83
802-XX-0XX-10-001000	7007	82
802-XX-0XX-10-002000	5016	80
802-XX-XXX-10-004000	3077	86
802-XX-0XX-20-001000	5005/5107	82
802-XX-0XX-30-001000	7007	85
802-XX-0XX-61-001000	5601	84
802-XX-0XX-62-001000	5602	84
803-XX-XXX-10-001000	1304	82
803-XX-0XX-10-002000	1303	80
803-XX-0XX-10-003000	1303	79
803-XX-XXX-10-004000	1313	86
803-XX-XXX-20-001000	1305/1306	82
803-XX-XXX-30-001000	1304	85
803-XX-XXX-61-001000	4614	84
803-XX-XXX-62-001000	4615	84
810-22-0XX-40-001101	0916-0	7.2
811-22-0XX-30-00X-101	0900-X	06
811-22-00X-30-00X-191	0900-X	09
812-22-0XX-30-00X-101	0907-X	07
812-22-0XX-30-01X-101	0907-X/0908-X	08
812-22-00X-30-00X-191	0907-X	09
813-22-0XX-30-00X-101	0900-X	06
813-22-0XX-30-00X-191	0900-X	09
814-22-0XX-30-00X-101	0907-X	07
814-22-0XX-30-01X-101	0907-X/0908-X	08
814-22-0XX-30-00X-191	0907-X	09
816-22-0XX-10-00X-101	0908-X	12
818-22-0XX-10-00X-101	0908-X	12
819-22-0XX-30-001101	0913-0	7.1
820-22-0XX-30-001101	0913-0	7.1
821-22-0XX-10-00X-101	0906-X	10
823-22-0XX-10-00X-101	0906-X	10
825-22-0XX-10-001101	0914	11
827-22-0XX-10-001101	0914	11
830-XX-0XX-10-001000	5012	70
830-XX-0XX-20-001000	3790	72
830-XX-0XX-30-001000	6218	71
830-XX-0XX-30-002000	6218	71
831-XX-0XX-10-001000	1802	70
831-XX-0XX-20-001000	1805	72
831-XX-0XX-30-001000	1802	71
831-XX-0XX-30-002000	1802	71
832-XX-XXX-10-001000	5012	70
832-XX-XXX-20-001000	3790/3796	72
832-XX-XXX-30-001000	6218	71
833-XX-XXX-10-001000	1802	70
833-XX-XXX-20-001000	1805/3805	72
833-XX-XXX-30-001000	1802	71
834-XX-0XX-10-001000	3435	87
835-XX-0XX-10-001000	3435	87
850-XX-0XX-10-001000	4006-0	66
850-XX-0XX-20-001000	4006-1	67
850-XX-0XX-30-001000	4006-0	68
850-XX-0XX-30-002000	4006-0	68
851-XX-0XX-10-001000	4890-0	66
851-XX-0XX-10-002000	0467	66
851-XX-0XX-10-011000	4890-1	66.1
851-XX-0XX-10-021000	4890-2	66.1
851-XX-0XX-20-001000	4890-1	67
851-XX-0XX-30-001000	4890-0	68
851-XX-0XX-30-002000	4890-0	68
852-XX-XXX-10-001000	4006-0	66
852-XX-XXX-20-001000	4006-1/2	67
852-XX-XXX-30-001000	4006-0	68
853-XX-XXX-10-001000	4890-0	66
853-XX-XXX-10-011000	4890-1	66.1
853-XX-XXX-10-021000	4890-2	66.1
853-XX-XXX-20-001000	4890-1/2	67
853-XX-XXX-30-001000	4890-0	68
854-22-0XX-10-001101	0950-0	12.1
854-22-0XX-30-001101	0951-0	12.2
855-22-0XX-10-001101	0950-0	12.1
855-22-0XX-30-001101	0951-0	12.2
856-XX-0XX-10-051000	1933	14.1
856-XX-0XX-30-051000	1935	14.1
857-XX-0XX-10-051000	1933	14.1
857-XX-0XX-30-051000	1935	14.1
862-XX-121-00-180000	6218	59
862-XX-121-30-180000	6218	60
896-43-004-00-000000	N/A	122
896-43-004-90-000000	N/A	122
896-43-005-00-100001	N/A	121
896-43-008-90-000000	N/A	122
897-43-004-90-000000	N/A	122
897-43-005-00-100001	N/A	121
896-43-004-00-000000	N/A	122
896-43-004-90-000000	N/A	122

INDEX

NUMERICAL LISTING AND LOCATION OF MILL-MAX SOCKET ASSEMBLY NUMBERS WITH REFERENCE TO MILL-MAX PINS

MILL-MAX SOCKET ASSEMBLY NUMBER	MILL-MAX PIN # REF.	PAGE #
896-43-005-00-100001	N/A	121
896-43-008-90-000000	N/A	122
897-43-004-90-000000	N/A	122
897-43-005-00-100001	N/A	121
917-XX-XXX-41-001000	1701	123
917-XX-XXX-41-005000	1705	123
940-44-XXX-17-40000X	N/A	118
940-44-XXX-24-000000	N/A	119
999-11-XXX-10-000000	N/A	125

MILL-MAX SOCKET ASSEMBLY NUMBER	MILL-MAX PIN # REF.	PAGE #

INDEX

NUMERICAL LISTING AND LOCATION OF MILL-MAX PINS

PART#	PAGE	PART#	PAGE	PART#	PAGE	PART#	PAGE	PART#	PAGE	PART#	PAGE
0038	166	0319	151	0407	146	0677	134	1047	167	1802	140
0039	166	0322	152	0415	146	0678	135	1052	169	1803	140
0040	166	0323	152	0433	157	0679	134	1053	169	1804	140
0066	166	0324	152	0434	157	0680	133	1064	195	1805	140
0067	166	0325	152	0435	157	0682	134	1065	134	1806	140
0068	166	0326	145	0436	157	0697	135	1066	134	1807	140
0086	166	0327	153	0442	128	0700	183	1067	178	1808	140
0088	166	0328	153	0444	167	0703	132	1068	195	1873	147
0089	166	0329	154	0445	167	0707	132	1070	195	1933	180
0132	136	0330	148	0447	137	0730	195	1071	195	1935	180
0133	136	0331	151	0461	129	0739	155	1072	195	1938	185
0134	136	0333	153	0462	131	0814	154	1083	194	1940	185
0135	136	0334	153	0463	131	0850	17.2	1090	194	1941	185
0136	137	0335	149	0464	127	0851	17.2	1092	195	1942	185
0137	137	0336	152	0466	131	0900	15	1093	195	2086	129
0138	137	0338	143	0467	129	0901	16	1094	192	2101	198
0139	137	0339	143	0468	132	0903	138	1095	193	2102	196
0141	137	0340	153	0477	133	0904	138	1096	195	2103	205
0145	137	0341	135	0478	133	0905	15	1097	193	2104	205
0146	137	0342	157	0479	165	0906	16	1103	137	2105	205
0147	136	0343	154	0489	131	0907	15	1104	139	2106	205
0148	137	0344	152	0490	161	0908	16	1105	159	2107	205
0149	133	0345	153	0491	161	0910	17	1106	195	2108	196
0152	137	0347	154	0492	158	0912	184	1109	136	2109	196
0153	138	0348	152	0493	161	0913	15	1110	192	2110	198
0156	136	0349	152	0496	159	0914	16	1122	195	2111	196
0240	139	0350	162	0498	139	0915	178	1124	192	2112	205
0252	135	0351	153	0501	133	0922	16	1130	177	2113	196
0253	135	0354	156	0504	179	0925	15	1147	130	2115	210
0255	136	0355	156	0505	179	0927	15	1179	174	2297	168
0257	178	0356	154	0508	175	0928	15	1210	192	2301	199
0259	185	0357	153	0512	132	0929	16	1212	193	2302	207
0265	183	0358	154	0520	190	0930	16	1213	193	2303	206
0270	183	0359	154	0522	178	0932	16	1214	193	2304	200
0272	183	0360	154	0529	127	0934	15	1215	192	2305	200
0273	146	0362	158	0542	178	0936	15	1216	193	2306	200
0275	183	0363	158	0548	128	0940	186	1221	192	2307	200
0279	148	0364	158	0550	132	0950	17.1	1222	192	2308	197
0280	168	0365	158	0552	129	0951	17.1	1261	138	2309	211
0281	168	0366	158	0553	128	0952	178	1267	177	2310	199
0282	183	0367	158	0554	128	0967	17	1302	193	2311	200
0284	146	0368	159	0555	134	0980	16	1303	150	2312	197
0285	146	0370	161	0556	137	0990	17	1304	148	2313	212
0286	185	0372	158	0558	134	0995	188	1305	149	2314	208
0287	146	0373	153	0560	131	0997	17	1306	149	2315	207
0290	182	0378	143	0566	128	1001	136	1313	151	2316	198
0291	146	0379	165	0569	129	1005	137	1334	142	2317	198
0292	144	0381	158	0574	132	1010	192	1385	141	2318	211
0293	146	0382	169	0577	164	1011	192	1401	141	2319	212
0294	144	0383	169	0579	130	1012	192	1407	128	2320	206
0295	144	0385	141	0600	182	1013	137	1434	133	2321	212
0297	144	0387	161	0613	130	1020	192	1502	185	2322	206
0298	145	0388	163	0616	161	1021	192	1534	132	2323	206
0300	148	0389	163	0660	134	1022	192	1602	138	2324	196
0301	148	0390	163	0664	145	1023	142	1610	138	2325	199
0303	146	0391	161	0665	134	1024	139	1701	142	2326	210
0305	148	0393	161	0666	135	1030	166,193	1702	166	2328	206
0306	146	0394	161	0667	134	1031	166,193	1703	166	2329	197
0307	139	0395	162	0668	135	1032	166,193	1705	139	2333	198
0309	148	0396	145	0669	135	1033	135	1706	139	2348	199
0312	153	0397	144	0670	135	1034	166	1707	139	2352	207
0314	153	0398	144	0671	132	1035	166	1752	180	2355	199
0315	181	0399	148	0672	139	1036	166	1753	139	2362	207
0316	153	0400	149	0673	135	1038	138	1762	139	2365	199
0317	153	0401	150	0675	134	1040	166	1782	141	2381	174
0318	193	0405	152	0676	135	1045	166	1801	136	2400	149

INDEX

NUMERICAL LISTING AND LOCATION OF MILL-MAX PINS

PART#	PAGE	PART#	PAGE	PART#	PAGE	PART#	PAGE	PART#	PAGE	PART#	PAGE
2501	202	3077	182	3302	186	4622	140	6800	155	8859	179
2502	208	3100	155	3303	186	4689	171	6821	187	8862	142
2503	200	3101	188	3304	186	4825	171	6857	149	8864	145
2505	199	3102	188	3360	186	4890	131	7007	182	8866	140
2506	199	3103	188	3400	182	4900	160	7009	143	8874	130
2507	207	3104	188	3401	182	4964	172	7065	134	8876	185
2508	201	3105	188	3402	182	4965	172	7132	138	8877	142
2510	197	3106	188	3404	179	5005	182	7305	149	8885	175
2511	208	3110	187	3405	182	5011	181	7310	191	8894	132
2512	203	3111	187	3406	181	5012	175	7405	151	8898	137
2513	197	3112	184	3408	183	5016	182	7406	151	8919	182
2514	211	3113	186	3409	181	5035	172	7491	131	8940	185
2515	208	3114	184	3410	182	5059	154	7520	146	8947	127
2516	208	3115	184	3411	182	5062	173	7553	130	8952	189
2517	206	3116	177	3413	180	5063	172	7614	149	8953	189
2520	206	3117	184	3435	164	5102	185	7827	177	8954	189
2524	201	3118	184	3450	151	5107	182	8000	183	8955	189
2526	207	3119	184	3490	156	5113	181	8006	183	8963	163
2530	212	3120	188	3516	179	5137	171	8016	162	8964	142
2533	198	3121	175	3520	151	5155	176	8067	159	8969	176
2551	201	3122	188	3601	190	5231	191	8086	174	8975	128
2561	201	3123	188	3602	184	5240	172	8114	146	8979	176
2601	167	3124	188	3603	183	5275	192	8131	139	8995	180
2602	167	3125	188	3609	190	5280	165	8206	155	8996	160
2603	167	3126	188	3620	186	5291	165	8210	127	9000	178
2617	180	3128	175	3621	186	5295	145	8252	138	9016	161
2650	172	3129	177	3667	159	5301	194	8257	172	9019	144
2701	209	3130	186	3790	176	5342	142	8300	148	9022	174
2702	202	3131	184	3796	176	5359	164	8301	194	9036	176
2703	202	3132	187	3802	140	5364	165	8303	150	9039	144
2704	200	3133	190	3805	140	5435	177	8330	173	9050	171
2705	203	3134	186	3808	156	5503	181	8331	151	9051	176
2706	212	3135	177	3907	141	5504	181	8360	154	9064	160
2707	197	3136	187	3966	165	5505	181	8363	141	9075	180
2708	198	3137	187	4001	141	5509	181	8365	160	9081	175
2709	210	3138	190	4006	175	5510	179	8401	149	9083	171
2710	202	3139	184	4011	136	5511	179	8404	180	9086	173
2713	202	3140	188	4015	164	5522	129	8427	133	9092	191
2715	209	3141	188	4030	140	5531	130	8433	157	9101	147
2717	202	3142	189	4034	158	5552	131	8445	138	9113	171
2762	209	3144	190	4040	161	5556	176	8451	173	9137	171
2801	204	3145	189	4064	157	5601	187	8467	130	9159	176
2802	204	3146	189	4068	171	5602	187	8553	128	9184	156
2803	203	3147	177	4071	172	5650	147	8579	129	9185	172
2804	204	3148	187	4078	138	5660	137	8600	189	9214	161
2805	204	3149	188	4095	150	5739	132	8602	210	9218	180
2806	204	3150	187	4184	171	5834	159	8608	194	9222	156
2807	209	3151	186	4194	176	5960	141	8637	128	9225	127
2808	209	3152	190	4209	172	5970	133	8679	147	9228	173
2809	209	3153	188	4259	179	6002	143	8685	176	9234	137
2810	201	3154	178	4268	173	6021	147	8730	159	9265	174
2811	204	3155	176	4280	165	6023	129	8806	150	9280	160
2812	201	3156	212	4286	134	6092	173	8808	172	9293	145
2815	203	3157	178	4288	171	6095	173	8815	187	9324	158
2816	203	3158	178	4310	141	6142	174	8827	147	9353	151
2817	203	3159	189	4353	171	6192	130	8829	159	9354	151
2821	198	3185	141	4361	171	6214	129	8830	140	9359	154
2954	142	3210	177	4366	177	6218	175	8831	210	9363	142
2956	185	3221	188	4378	137	6252	140	8835	210	9372	159
3006	175	3222	188	4477	173	6401	150	8836	210	9393	149
3013	136	3223	188	4526	188	6458	180	8837	162	9401	159
3016	128	3230	189	4582	159	6477	173	8838	155	9407	130
3018	141	3231	190	4612	133	6547	172	8852	141	9462	130
3024	185	3232	189	4613	133	6585	179	8853	155	9548	128
3044	158	3233	190	4614	149	6628	151	8855	142	9553	130
3061	130	3301	186	4615	149	6659	154	8857	142	9801	159

INDEX

NUMERICAL LISTING AND LOCATION OF MILL-MAX PINS

PART#	PAGE	PART#	PAGE	PART#	PAGE	PART#	PAGE	PART#	PAGE	PART#	PAGE
9808	147										
9872	174										
9873	165										
9970	133										
9976	183										